SONY

3-067-425-**11** (1)

# Digital Video Camera Recorder

Mini DV Digital Video Cassette

## Operating Instructions

Before operating the unit, please read this manual thoroughly, and retain it for future reference.

## Owner's Record

The model and serial numbers are located on the bottom. Record the serial number in the space provided below. Refer to these numbers whenever you call upon your Sony dealer regarding this product.

Model No. **DCR-TRV** _____ Model No. **AC-** _____

Serial No. _____ Serial No. _____

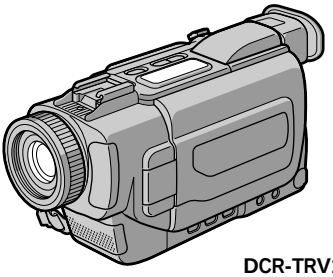

DCR-TRV17

Digital Handycam

InfoLITHIUM™ M SERIES

Cassette Memory

MEMORY STICK™

# DCR-TRV15/TRV17

©2001 Sony Corporation

## Welcome!

Congratulations on your purchase of this Sony Digital Handycam camcorder. With your Digital Handycam, you can capture life's precious moments with superior picture and sound quality. Your Digital Handycam is loaded with advanced features, but at the same time it is very easy to use. You will soon be producing home video that you can enjoy for years to come.

# WARNING

## To prevent fire or shock hazard, do not expose the unit to rain or moisture.

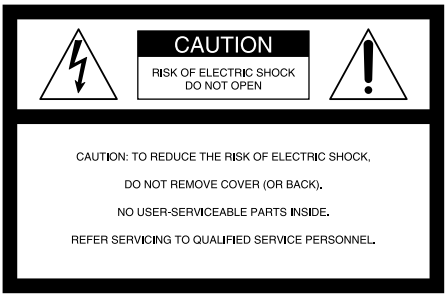

This symbol is intended to alert the user to the presence of uninsulated "dangerous voltage" within the product's enclosure that may be of sufficient magnitude to constitute a risk of electric shock to persons.

This symbol is intended to alert the user to the presence of important operating and maintenance (servicing) instructions in the literature accompanying the appliance.

Never expose the battery pack to temperatures above 60°C (140°F) such as in a car parked in the sun or under direct sunlight.

## For customers in the U.S.A. and CANADA

### DISPOSAL OF LITHIUM ION BATTERY.

### LITHIUM ION BATTERY. DISPOSE OF PROPERLY.

You can return your unwanted lithium ion batteries to your nearest Sony Service Center or Factory Service Center.

**Note:** In some areas the disposal of lithium ion batteries in household or business trash may be prohibited.

For the Sony Service Center nearest you call 1-800-222-SONY (United States only).
For the Sony Factory Service Center nearest you call 416-499-SONY (Canada only).

**Caution:** Do not handle damaged or leaking lithium ion battery.

## For the Customers in the U.S.A.

If you have any questions about this product, you may call :
Sony Customer Information Center 1-800-222-SONY (7669)
The number below is for the FCC related matters only.
Regulatory Information

### Declaration of Conformity

| | |
|---|---|
| Trade Name: | SONY |
| Model No.: | DCR-TRV15, DCR-TRV17 |
| Responsible Party: | Sony Electronics Inc. |
| Address: | 680 Kinderkamack Road, Oradell, NJ07649 U.S.A. |
| Telephone No.: | 201-930-6972 |

This device complies with Part 15 of the FCC Rules. Operation is subject to the following two conditions.: (1) This device may not cause harmful interference, and (2)this device must accept any interference received, including interference that may cause undesired operation.

## "Memory Stick"

This device complies with Part 15 of the FCC Rules. Operation is subject to the following two conditions: (1) This device may not cause harmful interference, and (2) this device must accept any interference received, including interference that may cause undesired operation.

## CAUTION

You are cautioned that any changes or modifications not expressly approved in this manual could void your authority to operate this equipment.

## Note:

This equipment has been tested and found to comply with the limits for a Class B digital device, pursuant to Part 15 of the FCC Rules. These limits are designed to provide reasonable protection against harmful interference in a residential installation. This equipment generates, uses, and can radiate radio frequency energy and, if not installed and used in accordance with the instructions, may cause harmful interference to radio communications. However, there is no guarantee that interference will not occur in a particular installation. If this equipment does cause harmful interference to radio or television reception, which can be determined by turning the equipment off and on, the user is encouraged to try to correct the interference by one or more of the following measures:

— Reorient or relocate the receiving antenna.
— Increase the separation between the equipment and receiver.
— Connect the equipment into an outlet on a circuit different from that to which the receiver is connected.
— Consult the dealer or an experienced radio/TV technician for help.

## For customers in CANADA

## CAUTION

TO PREVENT ELECTRIC SHOCK, MATCH WIDE BLADE OF PLUG TO WIDE SLOT, FULLY INSERT.

## "Memory Stick"

This Class B digital apparatus complies with Canadian ICES-003.

# Main Features

## Taking moving or still images, and playing them back

- Recording a picture (p. 21)
- Recording a still image on a tape (p. 38)
- Playing back a tape (p. 31)
- Recording still images on “Memory Stick”s (p. 112) (DCR-TRV17 only)
- Recording moving pictures on “Memory Stick”s (p. 120) (DCR-TRV17 only)
- Viewing a still image recorded on “Memory Stick” (p. 129) (DCR-TRV17 only)
- Viewing a moving picture recorded on “Memory Stick” (p. 132) (DCR-TRV17 only)

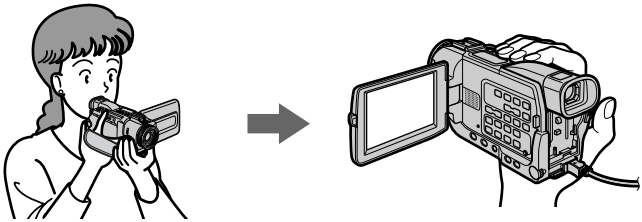

## Capturing images on your computer

- Using with analog video unit and your computer (p. 79)
- Viewing images recorded on “Memory Stick” using USB cable (p. 134) (DCR-TRV17 only)

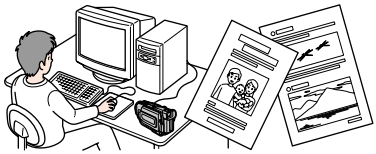

## Other uses

### Functions to adjust exposure in the recording mode

- Back light (p. 26)
- NightShot / Super NightShot (p. 27)
- PROGRAM AE (p. 49)
- Adjusting the exposure manually (p. 52)

### Functions to give images more impact

- Digital zoom (p. 24) The default setting is set to **OFF**. (To zoom greater than 10×, select the digital zoom power in **D ZOOM** in the menu settings.)
- Fader (p. 43)
- Picture effect (p. 45)
- Digital effect (p. 46)
- Digital program editing (p. 68)
- Title (p. 89, 92)
- MEMORY MIX (p. 124) (DCR-TRV17 only)

### Functions to give a natural appearance to your recordings

- Landscape mode (p. 49)
- Sports lesson mode (p. 49)
- Manual focus (p. 53)

### Functions to use after recording

- END SEARCH / EDITSEARCH / Rec review (p. 30)
- DATA CODE (p. 32)
- SUPER LASER LINK (p. 36)
- Tape PB ZOOM (p. 59) / Memory PB ZOOM (p. 140) (DCR-TRV17 only)
- Zero set memory (p. 60, 83)
- Title search (p. 61)
- HiFi SOUND (p. 98)

# Checking supplied accessories

Make sure that the following accessories are supplied with your camcorder.

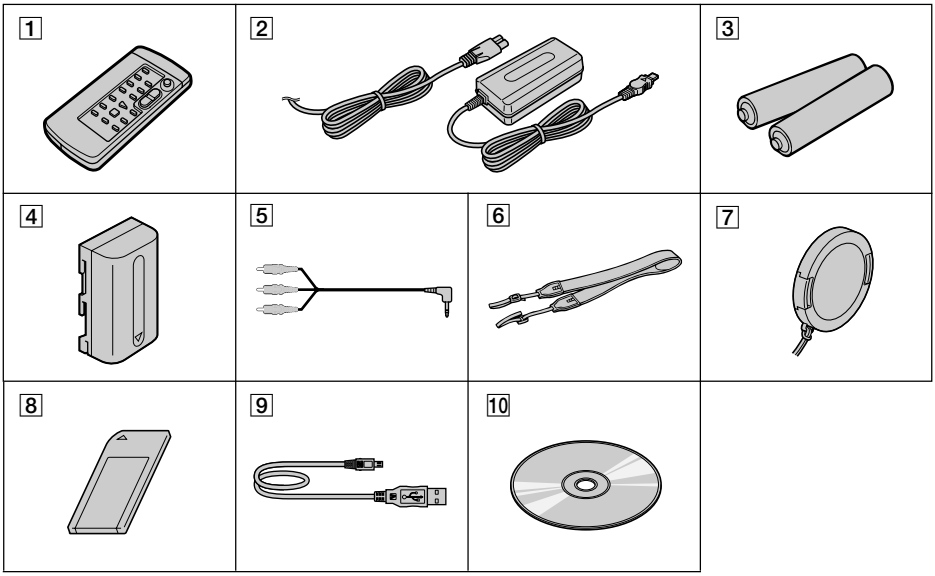


1 **Wireless Remote Commander** (1) (p. 178)

2 **AC-L10A/L10B/L10C AC power adaptor** (1), **Power cord** (1) (p. 13)

3 **Size AA (R6) battery for Remote Commander** (2) (p. 178)

4 **NP-FM30 battery pack** (1) (p. 12, 13)

5 **A/V connecting cable** (1) (p. 35, 66)

6 **Shoulder strap** (1) (p. 173)

7 **Lens cap** (1) (p. 21)

8 **"Memory Stick"** (1) (p. 103) DCR-TRV17 only

9 **USB cable** (1) (p. 135) DCR-TRV17 only

10 **CD-ROM (SPVD-004, USB Driver)** (1) (p. 135) DCR-TRV17 only

Contents of the recording cannot be compensated if recording or playback is not made due to a malfunction of the camcorder, storage media, etc.

# Table of contents


Main Features ..... 4
Checking supplied accessories ..... 5

## Quick Start Guide ..... 8

## Getting started

Using this manual ..... 10
Step 1 Preparing the power supply ... 12
Installing the battery pack ..... 12
Charging the battery pack ..... 13
Connecting to the wall outlet ..... 17
Step 2 Setting the date and time ..... 18
Step 3 Inserting a cassette ..... 20

## Recording – Basics

Recording a picture ..... 21
Shooting backlit subjects – BACK LIGHT ..... 26
Shooting in the dark – Night Shot / Super NightShot ..... 27
Self-timer recording ..... 28
Checking the recording – END SEARCH / EDITSEARCH / Rec Review .... 30

## Playback – Basics

Playing back a tape ..... 31
Viewing the recording on TV ..... 35

## Advanced Recording Operations

Recording a still image on a tape – Tape Photo recording ..... 38
Adjusting the white balance manually ..... 41
Using the wide mode ..... 42
Using the fader function ..... 43
Using special effects – Picture effect .. 45
Using special effects – Digital effect ... 46
Using the PROGRAM AE function .... 49
Adjusting the exposure manually ..... 52
Focusing manually ..... 53
Interval recording ..... 54
Frame by frame recording – Cut recording ..... 56

## Advanced Playback Operations

Playing back a tape with picture effects ..... 57
Playing back a tape with digital effects ..... 58
Enlarging images recorded on tapes – Tape PB ZOOM ..... 59
Quickly locating a scene using the zero set memory function ..... 60
Searching the boundaries of recorded tape by title – Title search ..... 61
Searching a recording by date – Date search ..... 62
Searching for a photo – Photo search / Photo scan ..... 64

## Editing

Dubbing a tape ..... 66
Dubbing only desired scenes – Digital program editing ..... 68
Using with analog video unit and personal computer – Signal convert function ..... 79
Recording video or TV programs ..... 80
Inserting a scene from a VCR – Insert editing ..... 83
Audio dubbing ..... 85
Superimposing a title ..... 89
Making your own titles ..... 92
Labeling a cassette ..... 94

## Customizing Your Camcorder

Changing the menu settings ..... 96

## “Memory Stick” Operations (DCR-TRV17 only)

Using a “Memory Stick” – introduction ..... 103
Recording still images on “Memory Stick”s – Memory photo recording ..... 112
Recording an image from a tape as a still image ..... 117
Recording moving pictures on “Memory Stick”s – MPEG movie recording ..... 120
Recording a picture from a tape as a moving picture ..... 121

Superimposing a still picture in a "Memory Stick" on a moving picture – MEMORY MIX ..... 124
Copying still images from a tape – Photo save ..... 127
Viewing a still picture – Memory photo playback ..... 129
Viewing a moving picture – MPEG movie playback ..... 132
Viewing images using computer ..... 134
Copying the image recorded on "Memory Stick"s to tapes ..... 138
Enlarging still images recorded on "Memory Stick"s – Memory PB ZOOM ..... 140
Playing back images in a continuous loop – SLIDE SHOW ..... 142
Preventing accidental erasure – Image protection ..... 143
Deleting images ..... 144
Writing a print mark – PRINT MARK ..... 146
Using the printer (optional) ..... 148

## Troubleshooting

Types of trouble and their solutions ..... 149
Self-diagnosis display ..... 155
Warning indicators and messages .... 156

## Additional Information

Usable cassettes ..... 158
About "InfoLITHIUM" battery pack ..... 160
About i.LINK ..... 162
Using your camcorder abroad ..... 164
Maintenance information and precautions ..... 165
Specifications ..... 169

## Quick Reference

Identifying the parts and controls .... 171
Index ..... Back cover

# Quick Start Guide

This chapter introduces you to the basic features of your camcorder. See the page in parentheses "(  )" for more information.

## 1 Connecting the power cord (p. 17)

Use the battery pack when using your camcorder outdoors (p. 12).

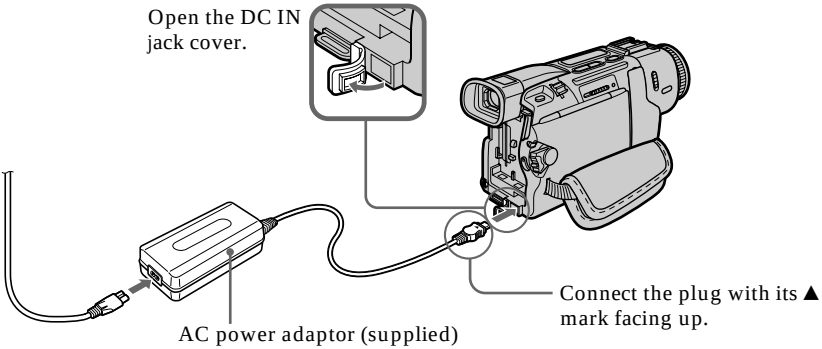


## 2 Inserting a cassette (p. 20)

❶ Slide OPEN / EJECT in the direction of the arrow and open the lid.

❷ Push the middle portion of the back of the cassette to insert. Insert the cassette in a straight line deeply into the cassette compartment with the window facing out.

❸ Close the cassette compartment by pressing the PUSH mark on the cassette compartment. After the cassette compartment going down completely, close the lid until it clicks.

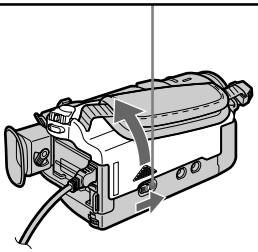

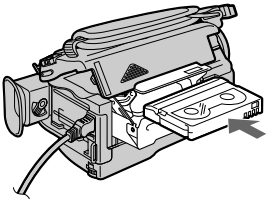

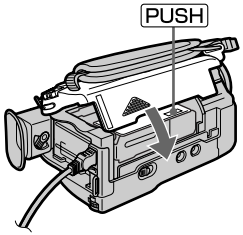

# 3 Recording a picture (p. 21)

1. Remove the lens cap.

2. Set the POWER switch to CAMERA while pressing the small green button.

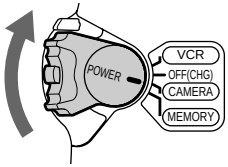


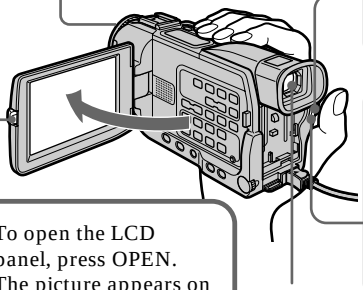

3. To open the LCD panel, press OPEN. The picture appears on the screen.

4. Press START/STOP. Your camcorder starts recording. To stop recording, press START/STOP again.

**Viewfinder**
When the LCD panel is closed, use the viewfinder placing your eye against its eyecup.

When you purchase your camcorder, the clock setting is set to off. If you want to record the date and time for a picture, set the clock setting before recording (p. 18).

# 4 Monitoring the playback picture on the LCD screen (p. 31)

1. Set the POWER switch to VCR while pressing the small green button.

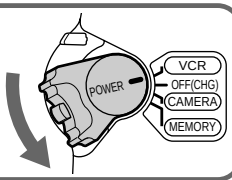


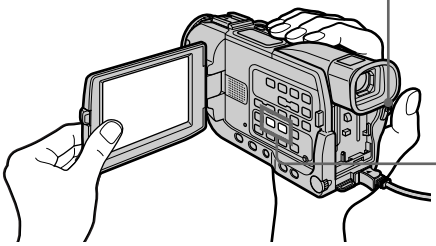

2. Press ◀◀ to rewind the tape.

3. Press ▶ to start playback.

**NOTE**
Do not pick up your camcorder by holding the viewfinder, the LCD panel, or the battery pack.

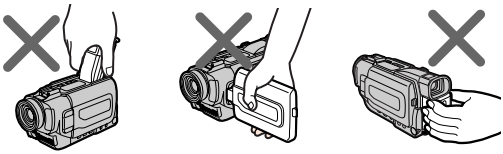

# Using this manual

The instructions in this manual are for the two models listed in the table below. Before you start reading this manual and operating your camcorder, check the model number by looking at the bottom of your camcorder. The DCR-TRV17 is the model used for illustration purposes. Otherwise, the model name is indicated in the illustrations. Any differences in operation are clearly indicated in the text, for example, "DCR-TRV17 only".

As you read through this manual, buttons and settings on your camcorder are shown in capital letters.

e.g. Set the POWER switch to CAMERA.
When you carry out an operation, you can hear a beep sound to indicate that the operation is being carried out.

### Types of differences

| DCR- | TRV15 | TRV17 |
|---|---|---|
| MEMORY mark*1) (on the POWER switch) | — | ● |
| Ψ (USB) jack | — | ● |
| Intelligent accessory shoe | 8 pin | 15 pin*2) |

● Provided
— Not provided

*1) The model with MEMORY marked on the POWER switch is provided with memory functions. See page 106 for details.
*2) This intelligent accessory shoe is designed to use a printer (optional) (p. 148).

## Note on Cassette Memory

Your camcorder is based on the DV format. You can only use mini DV cassettes with your camcorder. We recommend that you use a tape with cassette memory CM.

The functions which require different operations depending on whether the tape has the cassette memory or not are:
- End search (p. 30)
- Date search (p. 62)
- Photo search (p. 64)

The functions you can operate only with the cassette memory are:
- Title search (p. 61)
- Superimposing a title (p. 89)
- Making your own titles (p. 92)
- Labeling a cassette (p. 94)

For details, see page 158.

CM only You see this mark in the introduction of the features that are operated only with cassette memory.

Tapes with cassette memory are marked by CM (Cassette Memory).

## Note on TV color systems

TV color systems differ from country to country. To view your recordings on a TV, you need an NTSC system-based TV.

## Copyright precautions

Television programs, films, video tapes, and other materials may be copyrighted. Unauthorized recording of such materials may be contrary to the provision of the copyright laws.

## Precautions on camcorder care

### Lens and LCD screen/finder (on mounted models only)

- **The LCD screen and the finder are manufactured using extremely high-precision technology so over 99.99 % of the pixels are operational for effective use. However, there may be some tiny black points and/or bright points (white, red, blue or green in color) that constantly appear on the LCD screen and the finder. These points are normal in the manufacturing process and do not affect the recording in any way.**
- Do not let your camcorder get wet. Keep your camcorder away from rain and sea water. Letting your camcorder get wet may cause your camcorder to malfunction. Sometimes this malfunction cannot be repaired **[a]**.
- Never leave your camcorder exposed to temperatures above 60 °C (140 °F), such as in a car parked in the sun or under direct sunlight **[b]**.
- Be careful when placing the camera near a window or outdoors. Exposing the LCD screen, the finder or the lens to direct sunlight for long periods may cause malfunctions **[c]**.
- Do not directly shoot the sun. Doing so might cause your camcorder to malfunction. Take pictures of the sun in low light conditions such as dusk **[d]**.

**[a]**

**[b]**

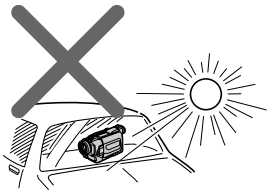

**[c]**

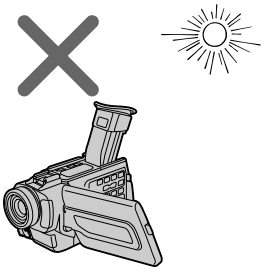

**[d]**

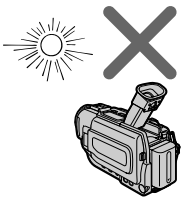

# Step 1 Preparing the power supply

## Installing the battery pack

Install the battery pack to use your camcorder outdoors.

**(1)** Lift up the viewfinder.
**(2)** Slide the battery pack down until it clicks.

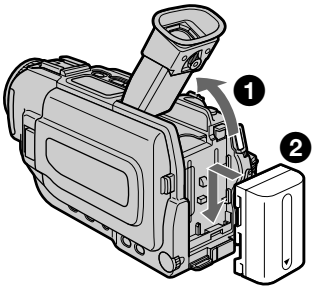


### To remove the battery pack

**(1)** Lift up the viewfinder.
**(2)** Slide the battery pack out in the direction of the arrow while pressing BATT down.

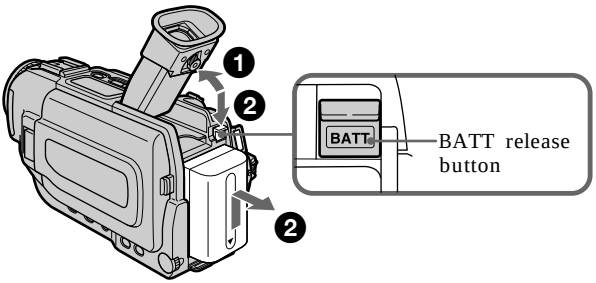


**If you use the large capacity battery pack**

If you install the NP-FM70/FM90/FM91 battery pack on your camcorder, extend its viewfinder.

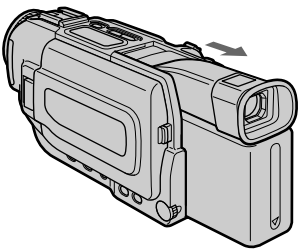

## Charging the battery pack

Use the battery pack after charging it for your camcorder.
Your camcorder operates only with the "InfoLITHIUM" battery pack (M series).
See page 160 for details of "InfoLITHIUM" battery pack.



**(1)** Open the DC IN jack cover and connect the AC power adaptor supplied with your camcorder to the DC IN jack on your camcorder with the plug's ▲ mark facing up.
**(2)** Connect the power cord to the AC power adaptor.
**(3)** Connect the power cord to the wall outlet.
**(4)** Set the POWER switch to OFF (CHG). Charging begins. The remaining battery time is indicated in minutes on the display window.

When the remaining battery indicator changes to ▰, **normal charge** is completed. To fully charge the battery **(full charge)**, leave the battery pack attached for about one hour after normal charge is completed until FULL appears in the display window. Fully charging the battery allows you to use the battery longer than usual.

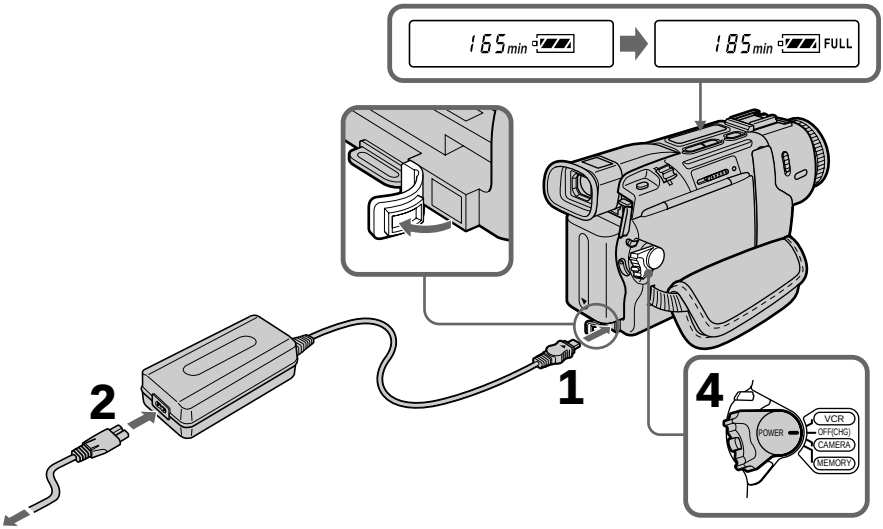


The number in the illustration of the display window may differ from that on your camcorder.

### After charging the battery pack

Disconnect the AC power adaptor from the DC IN jack on your camcorder.

**Note**

Prevent metallic objects from coming into contact with the metal parts of the DC plug of the AC power adaptor. This may cause a short-circuit, damaging the AC power adaptor.

**When the battery pack is charged fully**
"FULL" appears in the display window.

**Remaining battery time indicator**
The remaining battery time you record with the viewfinder is displayed.
The remaining battery time indicator in the display window indicates the approximate recording time with the viewfinder.

**Until your camcorder calculates the actual remaining battery time**
"– – – min" appears in the display window.

## Charging time

| Battery pack | Full charge (Normal charge) |
|---|---|
| NP-FM30 (supplied) | 145 (85) |
| NP-FM50 | 150 (90) |
| NP-FM70 | 240 (180) |
| NP-FM90 | 330 (270) |
| NP-FM91 | 360 (300) |

Approximate minutes to charge an empty battery pack at 25 °C (77 °F).

## Recording time

**DCR-TRV15**

| Battery pack | Recording with the viewfinder | | Recording with the LCD screen | |
|---|---|---|---|---|
| | Continuous* | Typical** | Continuous* | Typical** |
| NP-FM30 (supplied) | 125 | 65 | 90 | 45 |
| NP-FM50 | 200 | 110 | 150 | 75 |
| NP-FM70 | 415 | 225 | 310 | 165 |
| NP-FM90 | 630 | 345 | 475 | 255 |
| NP-FM91 | 725 | 395 | 550 | 290 |

**DCR-TRV17**

| Battery pack | Recording with the viewfinder | | Recording with the LCD screen | |
|---|---|---|---|---|
| | Continuous* | Typical** | Continuous* | Typical** |
| NP-FM30 (supplied) | 120 | 60 | 80 | 40 |
| NP-FM50 | 195 | 105 | 135 | 65 |
| NP-FM70 | 400 | 220 | 275 | 145 |
| NP-FM90 | 600 | 330 | 425 | 225 |
| NP-FM91 | 695 | 380 | 490 | 255 |

Approximate minutes when you use a fully charged battery

* Approximate continuous recording time at 25 °C (77 °F). The battery life will be shorter if you use your camcorder in a cold environment.

** Approximate number of minutes when recording while you repeat recording start/stop, zooming and turning the power on/off. The actual battery life may be shorter.

## Playing time

**DCR-TRV15**

| Battery pack | Playing time on LCD screen | Playing time with LCD closed |
|---|---|---|
| NP-FM30 (supplied) | 100 | 135 |
| NP-FM50 | 160 | 220 |
| NP-FM70 | 335 | 450 |
| NP-FM90 | 505 | 685 |
| NP-FM91 | 585 | 785 |

**DCR-TRV17**

| Battery pack | Playing time on LCD screen | Playing time with LCD closed |
|---|---|---|
| NP-FM30 (supplied) | 85 | 130 |
| NP-FM50 | 140 | 210 |
| NP-FM70 | 295 | 430 |
| NP-FM90 | 450 | 655 |
| NP-FM91 | 520 | 755 |

Approximate minutes when you use a fully charged battery

Approximate minutes when playing back at 25 °C (77 ºF). The battery life will be shorter if you use your camcorder in a cold environment.

The recording and playing times of a normally charged battery are about 90% of those of a fully charged battery.

**If the power goes off although the battery remaining indicator indicates that the battery pack has enough power to operate**

Charge the battery pack fully again so that the indication on the battery remaining indicator is correct.

**What is "InfoLITHIUM"?**

The "InfoLITHIUM" is a lithium ion battery pack which can exchange data such as battery consumption with compatible electronic equipment. This unit is compatible with the "InfoLITHIUM" battery pack (M series). Your camcorder operates only with the "InfoLITHIUM" battery. "InfoLITHIUM" M series battery packs have the InfoLITHIUM™ M SERIES mark.

"InfoLITHIUM" is a trademark of Sony Corporation.

We recommend charging the battery pack in an ambient temperature of between 10 ˚C to 30 ˚C (50 ˚F to 86 ˚F).

## Connecting to a wall outlet



When you use your camcorder for a long time, we recommend that you power it from a wall outlet using the AC power adaptor.

**(1)** Open the DC IN jack cover, pulling the cover out a little and rotating it. Connect the AC power adaptor supplied with your camcorder to the DC IN jack on your camcorder with the plug's ▲ mark facing up.
**(2)** Connect the power cord to the AC power adaptor.
**(3)** Connect the power cord to a wall outlet.

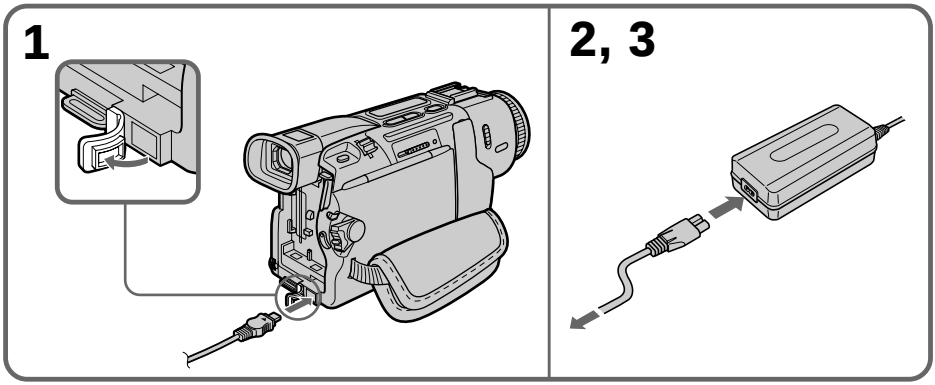


**PRECAUTION**

The set is not disconnected from the AC power source (wall outlet) as long as it is connected to the wall outlet, even if the set itself has been turned off.

**Notes**

- Place the AC power adaptor near a wall outlet.
  While using the AC power adaptor, if any trouble occurs with this unit, disconnect the plug from the wall outlet as soon as possible to cut off the power.
- The AC power adaptor can supply power even if the battery pack is attached to your camcorder.
- The DC IN jack has "source priority." This means that the battery pack cannot supply any power if the power cord is connected to the DC IN jack, even when the power cord is not plugged into a wall outlet.

**Using a car battery**

Use Sony DC Adaptor/Charger (optional). Refer to the operating instractions of the DC Adaptor/Charger for further information.

# Step 2 Setting the date and time

Set the date and time settings when you use your camcorder for the first time. “CLOCK SET” will be displayed each time that you set the POWER switch to CAMERA / MEMORY (DCR-TRV17 only) unless you set the date and time settings.
If you do not use your camcorder for about four months, the date and time settings may be released (bars may appear) because the built-in rechargeable battery in your camcorder will have been discharged (p. 166).
First, set the year, then the month, the day, the hour and then the minute.

**(1)** Set the POWER switch to CAMERA or MEMORY (DCR-TRV17 only), and then press MENU to display the menu settings.
**(2)** Turn the SEL / PUSH EXEC dial to select [ ], then press the dial.
**(3)** Turn the SEL / PUSH EXEC dial to select CLOCK SET, then press the dial.
**(4)** Turn the SEL / PUSH EXEC dial to adjust the desired year, then press the dial.
**(5)** Set the month, day and hour by turning the SEL / PUSH EXEC dial and pressing the dial.
**(6)** Set the minute by turning the SEL / PUSH EXEC dial and pressing the dial by the time signal. The clock starts to move.
**(7)** Press MENU to make the menu settings disappear.

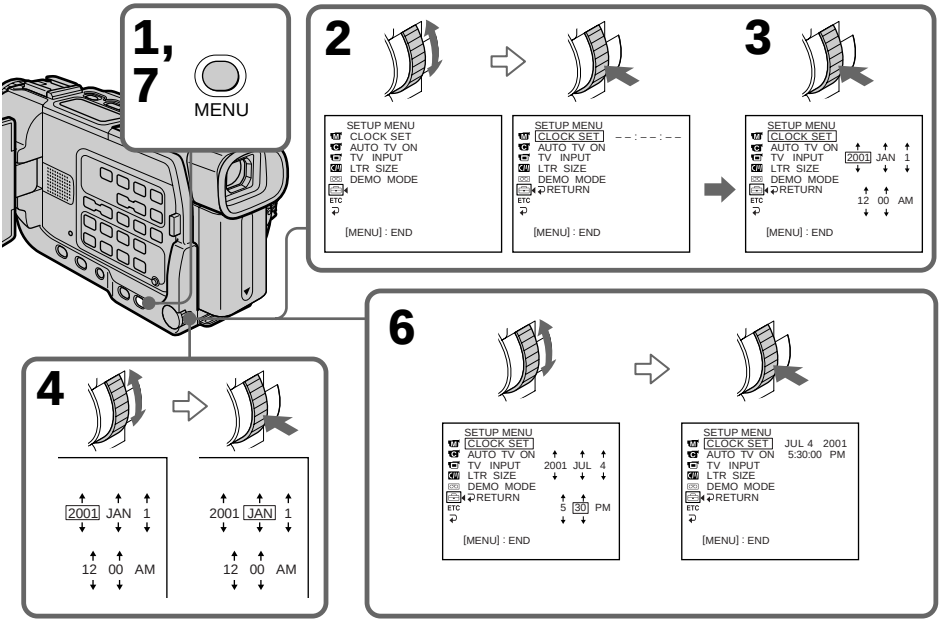


**The year changes as follows:**

1995 ← · · · · → 2001 ← · · · · → 2079

### If you do not set the date and time

"– –:– –:– –" is recorded on the data code of the tape and the "Memory Stick" (DCR-TRV17 only).

### Note on the time indicator

The internal clock of your camcorder operates on a 12-hour cycle.

- 12:00 AM stands for midnight.
- 12:00 PM stands for noon.

# Step 3 Inserting a cassette

**(1)** Install the power source.
**(2)** Slide OPEN / ⏏ EJECT in the direction of the arrow and open the lid. The cassette compartment automatically lifts up and opens.
**(3)** Push the middle portion of the back of the cassette to insert.
Insert the cassette in a straight line deeply into the cassette compartment with the window facing out.
**(4)** Close the cassette compartment by pressing the PUSH mark on the cassette compartment. The cassette compartment automatically goes down.
**(5)** After the cassette compartment going down completely, close the lid until it clicks.

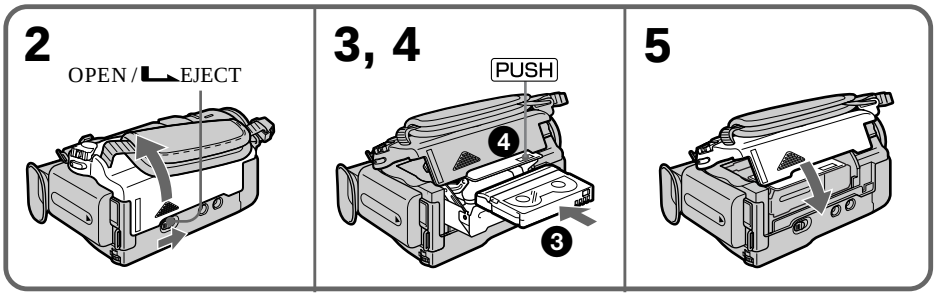


## To eject a cassette

Follow the procedure above, and take out the cassette in step 3.

---

**Note**

Do not press the cassette compartment down forcibly. Doing so may cause a malfunction.
The cassette compartment may not be closed when you press any part of the lid other than the PUSH mark.

**When you use cassette with cassette memory**

Read the instruction about cassette memory to use this function properly (p. 158).

**To prevent accidental erasure**

Slide the write-protect tab on the cassette to expose the red mark.

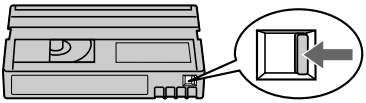

**When ejecting a cassette**

Do not press EDITSEARCH.

# Recording a picture

Your camcorder automatically focuses for you.

**(1)** Remove the lens cap by pressing both knobs on its sides and attatch the lens cap to the grip strap.
**(2)** Install the power source and insert a cassette. See “Step 1” to “Step 3” for more information (p. 12 to p. 20).
**(3)** Set the POWER switch to CAMERA while pressing the small green button. Your camcorder is set to the standby mode.
**(4)** To open the LCD panel, press OPEN. The viewfinder automatically turns off.
**(5)** Press START/STOP. Your camcorder starts recording. The REC indicator appears. The camera recording lamp located on the front of your camcorder lights up. To stop recording, press START/STOP again.



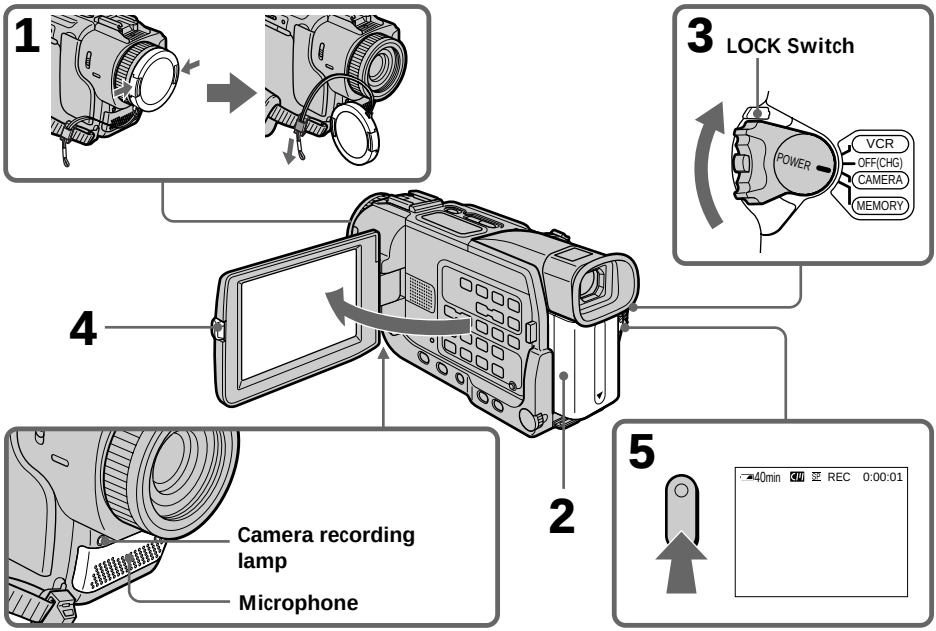


**Notes**
- Fasten the grip strap firmly.
- Do not touch the built-in microphone during recording.

**Note on Recording mode**
Your camcorder records and plays back in the SP (standard play) mode and in the LP (long play) mode. Select SP or LP in the menu settings. In the LP mode, you can record 1.5 times as long as in the SP mode.
When you record a tape in the LP mode on your camcorder, we recommend playing the tape on your camcorder.

### Note on the LOCK switch (DCR-TRV17 only)

When you slide the LOCK switch to the right, the POWER switch can no longer be set to MEMORY accidentally. LOCK switch is set to the left before your camcorder leaves the factory.

### To enable smooth transition

Transition between the last scene you recorded and the next scene is smooth as long as you do not eject the cassette even if you turn off your camcorder.
However, check the following:

- Do not mix recordings in the SP mode and ones in the LP mode on one tape.
- When you change the battery pack, set the POWER switch to OFF (CHG).
- When you use a tape with cassette memory, however, you can make the transition smooth even after ejecting the cassette if you use the END SEARCH function (p. 30).

### If you leave your camcorder in the standby mode for five minutes while the cassette is inserted

Your camcorder automatically turns off. This is to save battery power and to prevent battery and tape wear. To resume the standby mode, set the POWER switch to OFF (CHG), and to CAMERA again.

### When you record in the SP and LP modes on one tape or you record some scenes in the LP mode

The playback picture may be distorted or the time code may not be written properly between scenes.

### Recording data

The recording date (date/time or various settings when recorded) are not displayed while recording. However, they are recorded automatically onto tape. To display the recording date and time, press DATA CODE on the Remote Commander during playback.

## Adjusting the LCD screen

The LCD panel moves about 90 degrees to the viewfinder side and about 180 degrees to the lens side.
If you turn the LCD panel over so that it faces the other way, the ☺ indicator appears on the LCD screen and in the viewfinder **(Mirror mode)**.

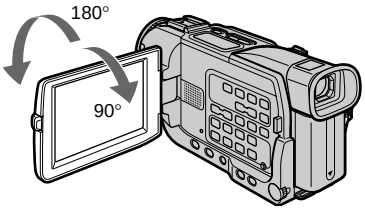


When closing the LCD panel, set it vertically until it clicks, and swing it into the camcorder body.

---

**Note**

When using the LCD screen except in the mirror mode, the viewfinder automatically turns off.

**When you use the LCD screen outdoors in direct sunlight**
The LCD screen may be difficult to see. If this happens, we recommend that you use the viewfinder.

**Picture in the mirror mode**
The picture on the LCD screen is a mirror-image. However, the picture will be normal when recorded.

**During recording in the mirror mode**
ZERO SET MEMORY on the Remote Commander does not work.

**Indicators in the mirror mode**
The STBY indicator appears as ❚❚● and REC as ●. Some of the other indicators appear mirror-reversed and others are not displayed.



## Adjusting the brightness of the LCD screen

Adjust the brightness of the LCD screen with LCD BRIGHT in in the menu settings (p. 98).

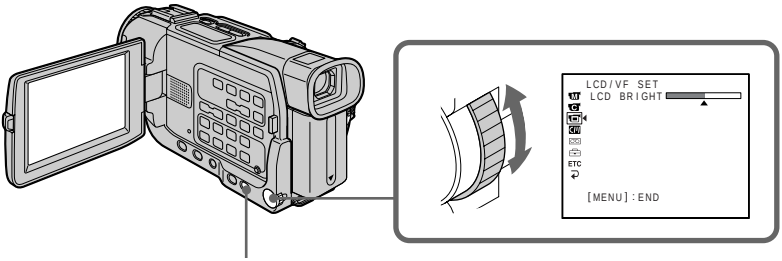


**LCD screen backlight**
You can change the brightness of the backlight. Select LCD B.L. in the menu settings (p. 98).

**Even if you adjust the LCD screen backlight or brightness of the LCD screen**
The recorded picture will not be affected.

## After recording

**(1)** Set the POWER switch to OFF (CHG).
**(2)** Close the LCD panel.
**(3)** Eject the cassette.

## Adjusting the viewfinder

If you record pictures with the LCD panel closed, check the picture with the viewfinder. Adjust the viewfinder lens to your eyesight so that the indicators in the viewfinder come into sharp focus.

Lift up the viewfinder and move the viewfinder lens adjustment lever.

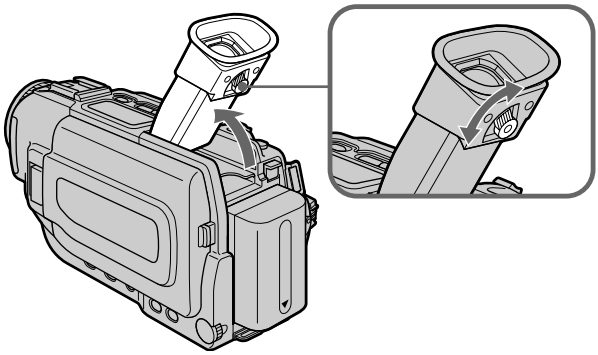

**Viewfinder backlight**

You can change the brightness of the backlight. Select VF B.L. in the menu settings. (p. 98)

## Using the zoom feature

Move the power zoom lever a little for a slower zoom. Move it further for a faster zoom. Using the zoom function sparingly results in better-looking recordings.
"T" side: for telephoto (subject appears closer)
"W" side: for wide-angle (subject appears farther away)

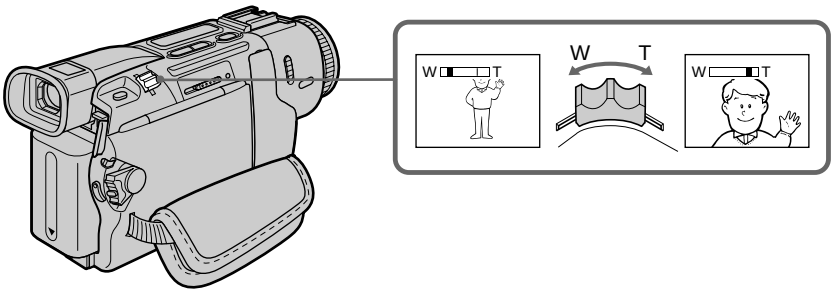

### To use zoom greater than 10×

Zoom greater than 10× is performed digitally. To activate digital zoom, select the digital power in D ZOOM in the menu settings (p. 97). The digital zoom function is set to OFF as a default settings. (p. 97)

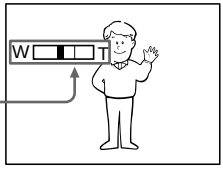


The right side of the bar shows the digital zooming zone.
The digital zooming zone appears when you select the digital power in the menu settings (p. 97).

### When you shoot close to a subject

If you cannot get a sharp focus, move the power zoom lever to the "W" side until the focus is sharp. You can shoot a subject that is at least about 80 cm (about 2 feet 5/8 inch) away from the lens surface in the telephoto position, or about 1 cm (about 1/2 inch) away in the wide-angle position.

### Notes on digital zoom

- Digital zoom starts to function when zoom exceeds 10×.
- The picture quality deteriorates as you move the power zoom lever toward the "T" side.
- You cannot use the digital zoom when the POWER switch is set to MEMORY (DCR-TRV17 only).

## Indicators displayed in the recording mode

The indicators are not recorded on tapes.

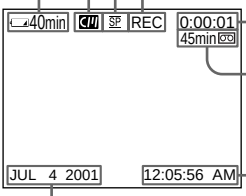


**Remaining battery time indicator**

**Cassette memory indicator**
This appears when using a tape with cassette memory.

**Recording mode indicator**

**STBY/REC indicator**

**Time code/Tape counter indicator**

**Remaining tape indicator** (p. 101)

**Time indicator**
**The time is displayed about 5 seconds after the power is turned on.**

**Date indicator**
**The date is displayed about 5 seconds after the power is turned on.**

**Remaining battery time indicator**
The remaining battery time indicator roughly indicates the recording time. The indicator may not be correct, depending on the conditions in which you are recording. When you close the LCD panel and open it again, it takes about one minute for the correct remaining battery time in minutes to be displayed.

**Time code**
The time code indicates the recording or playback time, “0:00:00” (hours : minutes : seconds) in CAMERA mode and “0:00:00:00” (hours : minutes : seconds : frames) in VCR mode. You cannot rewrite only the time code.

**Remaining tape indicator**
The indicator may not be displayed accurately depending on the tape.

**Recording data**
The recording data (date / time or various settings when recorded) are not displayed while recording. However, they are recorded automatically onto tape. To display the recording date and time, press DATA CODE on the Remote Commander during playback.

## Shooting backlit subjects – BACK LIGHT

When you shoot a subject with the light source behind the subject or a subject with a light background, use the backlight function.

In CAMERA or MEMORY (DCR-TRV17 only) mode, press BACK LIGHT.
The indicator appears on the screen.
To cancel, press BACK LIGHT again.

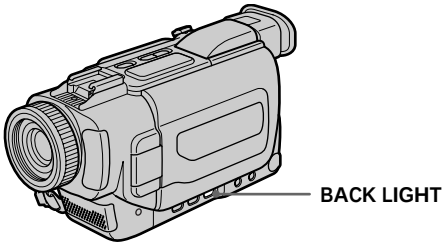


**If you press EXPOSURE when shooting backlit subjects**
The backlight function will be canceled.

## Shooting in the dark – NightShot/Super NightShot

The NightShot function enables you to shoot a subject in a dark place. For example, you can satisfactorily record the environment of nocturnal animals for observation when you use this function.

In CAMERA or MEMORY (DCR-TRV17 only) mode, slide NIGHTSHOT to ON. ⊙ and "NIGHTSHOT" indicators flash on the screen. To cancel the NightShot function, slide NIGHTSHOT to OFF.



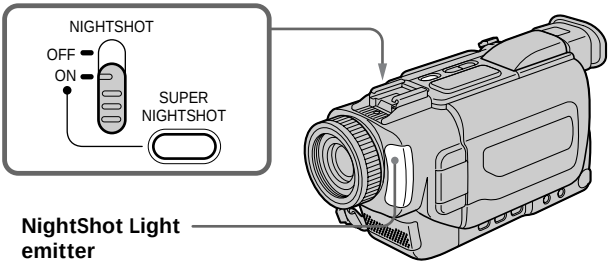


### Using Super NightShot

The Super NightShot mode makes subjects more than 16 times brighter than those recorded in the NightShot mode.

**(1)** In CAMERA mode, slide NIGHTSHOT to ON. ⊙ indicator flashes on the screen.
**(2)** Press SUPER NIGHTSHOT. The S⊙ indicator and "SUPER NIGHTSHOT" flash on the screen.
To cancel the Super NightShot mode, press SUPER NIGHTSHOT.

### Using the NightShot Light

The picture will be clearer with the NightShot Light on. To enable the NightShot Light, set N.S. LIGHT to ON in the menu settings (p. 97).

**Notes**

- Do not use the NightShot function in bright places (ex. the outdoors in the daytime). This may cause your camcorder to malfunction.
- When you keep NIGHTSHOT set to ON in normal recording, the picture may be recorded in incorrect or unnatural colors.
- If focusing is difficult with the autofocus mode when using the NightShot function, focus manually.

**While using the NightShot function, you cannot use the following functions:**

– Exposure
– PROGRAM AE
– White balance

**While using the Super NightShot function**
The shutter speed is automatically adjusted depending on the brightness. At that time, the moving picture may be slow down.

**While using the Super NightShot function, you cannot use the following functions:**
– Exposure
– PROGRAM AE
– Fader
– Digital effect
– White balance

**While in MEMORY mode (DCR-TRV17 only)**
You cannot use the Super NightShot function.

**NightShot Light**
NightShot Light rays are infrared and so are invisible. The maximum shooting distance using the NightShot Light is about 3 m (10 feet).

## Self-timer recording

Recording with the self-timer starts in 10 seconds automatically. You can also use the Remote Commander for this operation.

**(1)** Press MENU to display the menu settings in the standby mode.
**(2)** Turn the SEL/PUSH EXEC dial to select , then press the dial.
**(3)** Turn the SEL/PUSH EXEC dial to select SELFTIMER, then press the dial.
**(4)** Turn the SEL/PUSH EXEC dial to select ON, then press the dial.
**(5)** Press MENU to make the menu settings disappear.
**(6)** Press START/STOP.
Self-timer starts counting down from 10 with a beep sound. In the last two seconds of the countdown, the beep sound gets faster, then recording starts automatically. To stop recording, press START/STOP again.

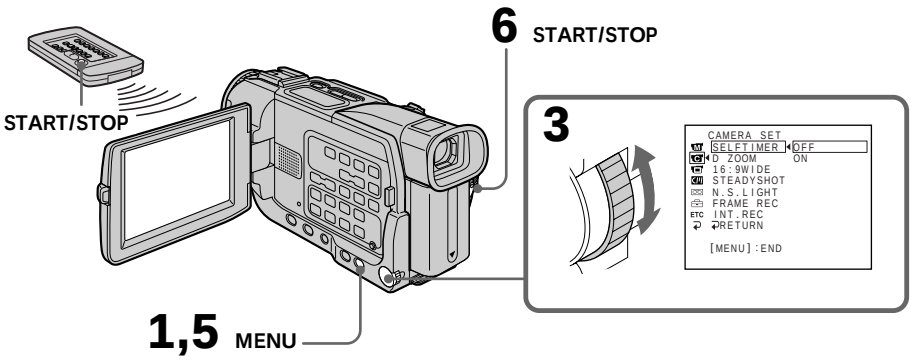

### To stop the countdown

Press START/STOP.
To restart the countdown, press START/STOP again.

### To record still images using the self-timer

Press PHOTO in step 6. (p. 39)

### To cancel self-timer recording

Set SELFTIMER to OFF in the menu settings in the standby mode.

---

**Note**

The self-timer recording mode is automatically cancelled when:
– Self-timer recording is finished.
– The POWER switch is set to OFF (CHG) or VCR.

**Self-timer memory photo recording (DCR-TRV17 only)**

You can also record still images on "Memory Stick"s with the self-timer (p. 116).

# Checking the recording

## – END SEARCH / EDITSEARCH / Rec Review

You can use these buttons to check the recorded picture or shoot so that the transition between the last recorded scene and the next scene you record is smooth.

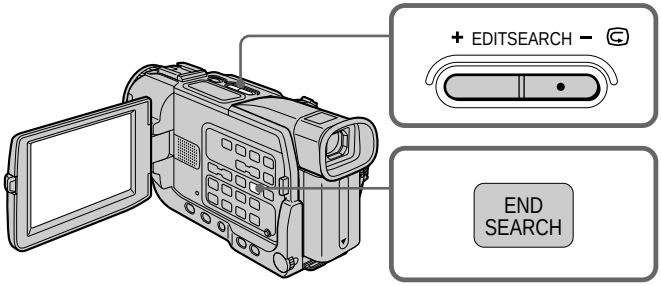


## END SEARCH

You can go to the end of the recorded section after you record.

Press END SEARCH in the standby mode.
The last five seconds of the recorded section are played back and your camcorder returns to the standby mode. You can monitor the sound from the speaker or headphones.

## EDITSEARCH

You can search for the next recording start point.

Hold down the + / – side of EDITSEARCH in the standby mode. The recorded section is played back.
+ : to go forward
– : to go backward
Release EDITSEARCH to stop playback. If you press START / STOP, re-recording begins from the point you released EDITSEARCH. You cannot monitor the sound.

## Rec Review

You can check the last recorded section.

Press the – side of EDITSEARCH momentarily in the standby mode.
The section you have stopped most recently will be played back for a few seconds, and then your camcorder will return to the standby mode. You can monitor the sound from the speaker or headphones.

---

**End search function**
When you use a tape without cassette memory, the end search function does not work once you eject the cassette after you have recorded on the tape. If you use a tape with cassette memory, the end search function works even once you eject the cassette.

**If a tape has a blank portion in the recorded portions**
The end search function may not work correctly.

# Playing back a tape

You can monitor the playback picture on the screen. If you close the LCD panel, you can monitor the playback picture in the viewfinder. You can control playback using the Remote Commander supplied with your camcorder.

**(1)** Install the power source and insert the recorded tape.
**(2)** Set the POWER switch to VCR while pressing the small green button.
**(3)** To open the LCD panel, press OPEN.
**(4)** Press ◀◀ to rewind the tape.
**(5)** Press ▶ to start playback.
**(6)** To adjust the volume, press either of the two buttons on VOLUME. The speaker on your camcorder is silent when the LCD panel is closed.



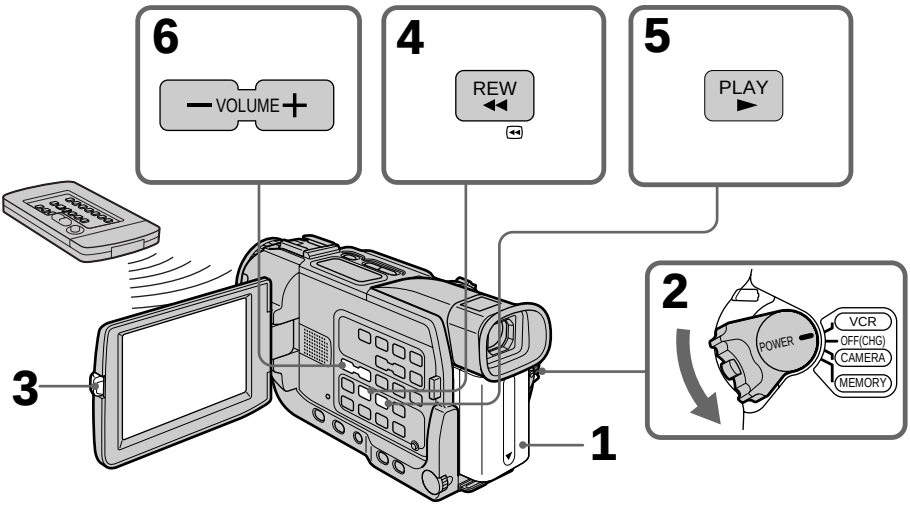


## To stop playback

Press ■.

### When monitoring on the LCD screen

You can turn the LCD panel over and move it back to the camcorder body with the LCD screen facing out.

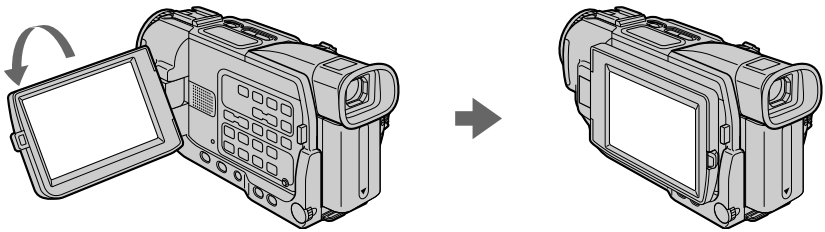

### When you open or close the LCD panel

Make sure that the LCD panel is set vertically.

## To display the screen indicators – Display function

Press DISPLAY on your camcorder or the Remote Commander supplied with your camcorder.
The indicators appear on the LCD screen.
To make the indicators disappear, press DISPLAY again.

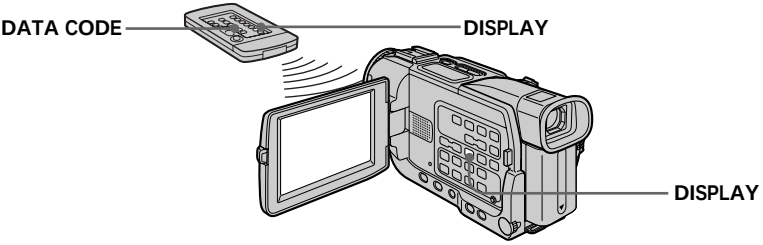


### Using the data code function

Your camcorder automatically records not only images on the tape but also the recording data (date / time or various settings when recorded) **(Data code)**.
Use the Remote Commander for this operation.

**Press DATA CODE on the Remote Commander in the playback mode.**
The display changes as follows:
date / time → various settings (SteadyShot, white balance, gain, shutter speed, aperture value, exposure mode) → no indicator

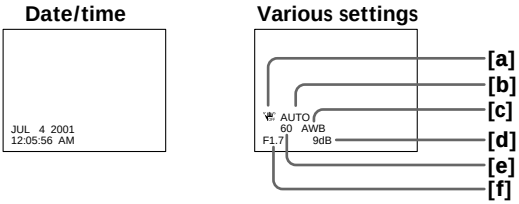


**[a]** SteadyShot off indicator
**[b]** Exposure mode indicator
**[c]** White balance indicator
**[d]** Gain indicator
**[e]** Shutter speed indicator
**[f]** Aperture value

**Not to display various settings**
Set DATA CODE to DATE in the menu settings (p. 102).
The display changes as follows:
date / time ↔ no indicator

### Recording data

Recording data is your camcorder's information when you have recorded. In the recording mode, the recording data will not be displayed.

### When you use the data code function, bars (-- -- --) appear if:

- A blank portion of the tape is being played back.
- The tape is unreadable due to tape damage or noise.
- The tape was recorded by a camcorder without the date and time set.

### Data code

The data code is displayed on the TV screen if you connect your camcorder to the TV.

### Remaining battery time indicator during playback

The indicator indicates the approximate continuous playback time.
The indicator may not be correct, depending on the conditions in which you are playing back. When you close the LCD panel and open it again, it takes about 1 minute for the correct remaining battery time to be displayed.



## Various playback modes

To operate video control buttons, set the POWER switch to VCR.

### To view a still picture (playback pause)

Press ❚❚ during playback. To resume normal playback, press ► or ❚❚.

### To advance the tape

Press ►► in the stop mode. To resume normal playback, press ►.

### To rewind the tape

Press ◄◄ in the stop mode. To resume normal playback, press ►.

### To change the playback direction

Press < on the Remote Commander during playback to reverse the playback direction. To resume normal playback, press ►.

### To locate a scene monitoring the picture (picture search)

Keep pressing ◄◄ or ►► during playback. To resume normal playback, release the button.

### To monitor the high-speed picture while advancing or rewinding the tape (skip scan)

Keep pressing ◄◄ while rewinding or ►► while advancing the tape. To resume rewinding or advancing, release the button.

### To view the picture at slow speed (slow playback)

Press ❚► on the Remote Commander during playback. For slow playback in the reverse direction, press <, then press ❚► on the Remote Commander. To resume normal playback, press ►.

### To view the picture at double speed

Press ×2 on the Remote Commander during playback. For double speed playback in the reverse direction, press <, then press ×2 on the Remote Commander. To resume normal playback, press ►.

## To view the picture frame-by-frame

Press II► on the Remote Commander in the playback pause mode. For frame-by-frame playback in the reverse direction, press ◄II. To resume normal playback, press ►.

## To search the last scene recorded (END SEARCH)

Press END SEARCH in the stop mode. The last five seconds of the recorded portion plays back and stops.

---

### In the various playback modes

- Sound is muted.
- The previous picture may remain as a mosaic image during playback.

### When the playback pause mode lasts for five minutes

Your camcorder automatically enters the stop mode. To resume playback, press ►.

### Slow playback

The slow playback can be performed smoothly on your camcorder: however, this function does not work for an output signal through the i DV IN / OUT jack.

### When you play back a tape in reverse

Horizontal noise may appear at the center, or the top and bottom of the screen. This is not a malfunction.

# Viewing the recording on TV

Connect your camcorder to your TV with the A/V connecting cable supplied with your camcorder to watch the playback picture on the TV screen. You can operate the video control buttons in the same way as when you monitor playback pictures on the screen. When monitoring the playback picture on the TV screen, we recommend that you power your camcorder from a wall outlet using the AC power adaptor (p. 17). Refer to the operating instructions of your TV.

Open the jack cover. Connect your camcorder to the TV using the A/V connecting cable supplied with your camcorder. Then, set the TV/VCR selector on the TV to VCR.

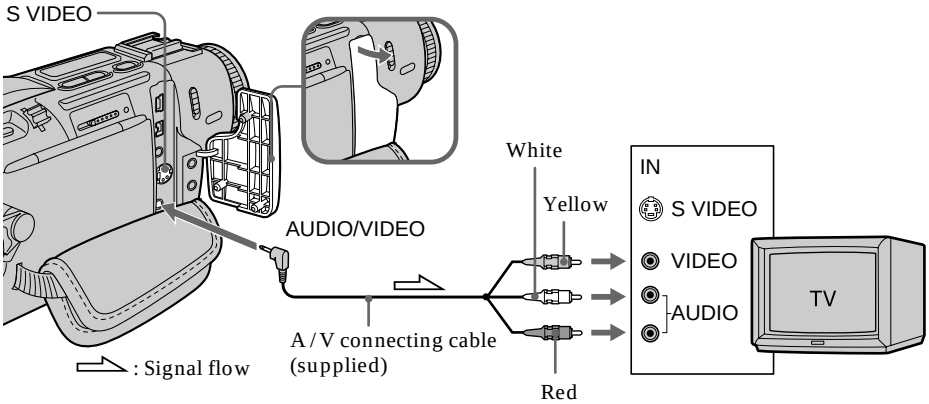


## If your TV is already connected to a VCR

Connect your camcorder to the LINE IN input on the VCR by using the A/V connecting cable supplied with your camcorder. Set the input selector on the VCR to LINE.

## If your TV or VCR is a monaural type

Connect the yellow plug of the A/V connecting cable to the video input jack and the white or the red plug to the audio input jack on the VCR or the TV. If you connect the white plug, the sound is L (left) signal. If you connect the red plug, the sound is R (right) signal.

---

**If your TV or VCR has an S video jack**

Connect using an S video cable (optional) to obtain high-quality pictures. With this connection, you do not need to connect the yellow (video) plug of the A/V connecting cable.

Connect the S video cable (optional) to the S video jacks on both your camcorder and the TV or the VCR.

This connection produces higher quality DV format pictures.

## Using the AV cordless IR receiver

Once you connect the AV cordless IR receiver (optional) to your TV or VCR, you can easily view the picture on your TV. For details, refer to the operating instructions of the AV cordless IR receiver.

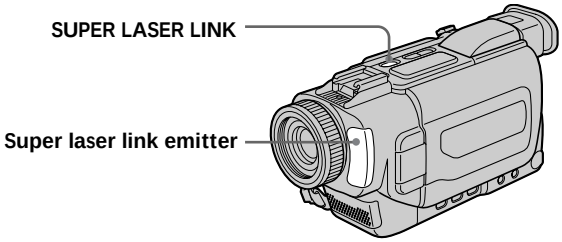


**Before operation**
Attach the power supply such as the AC power adaptor to your camcorder, and insert the recorded tape.

**(1)** After connecting your TV and AV cordless IR receiver, set the POWER switch on the AV cordless IR receiver to ON.
**(2)** Set the POWER switch to VCR.
**(3)** Turn the TV on and set the TV/VCR selector on the TV to VCR.
**(4)** Press SUPER LASER LINK. The lamp of SUPER LASER LINK lights up.
**(5)** Press ► on your camcorder to start playback.
**(6)** Point the super laser link emitter at the AV cordless IR receiver. Adjust the position of your camcorder and the AV cordless IR receiver to obtain clear playback pictures.

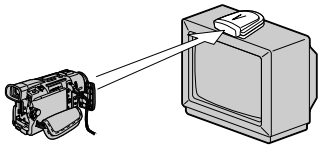

### To cancel the super laser link function

Press SUPER LASER LINK again. The lamp on the SUPER LASER LINK button goes out.

### If you turn the power off

The super laser link function turns off automatically.

### If you use a Sony TV

- You can turn on the TV automatically when you press SUPER LASER LINK. To do so, make sure you:
  – Turn the TV's main switch on.
  – Set AUTO TV ON to ON in the menu settings.
  – Point the super laser link emitter at the TV's remote sensor.
- You can switch the video input of the TV automatically to the one which the AV cordless IR receiver is connected. To do so, set AUTO TV ON to ON and TV INPUT to the same video input (1, 2, 3) in the menu settings. With some models, however, the picture and sound may be disconnected momentarily when the video input is switched.
- The above feature may not work on some TV models.

### When the super laser link function is activated (the SUPER LASER LINK button is lit)

Your camcorder consumes power. Press SUPER LASER LINK to turn off the laser link function when it is not needed.

SUPER LASER LINK is a trademark of Sony Corporation.

# Recording a still image on a tape – Tape Photo recording

You can record a still picture like a photograph. This mode is useful when you want to print a picture using a video printer (optional).
You can record about 510 pictures in the SP mode and about 765 pictures in the LP mode on a 60-minute tape.
Besides the operation described here, your camcorder can record still pictures on "Memory Stick"s (p. 112) (DCR-TRV17 only).

**(1)** In the standby mode, keep pressing PHOTO lightly until a still picture appears.
The CAPTURE indicator appears. Recording does not start yet.
To change the still picture, release PHOTO, select a still picture again, and then press and hold PHOTO lightly.

**(2)** Press PHOTO deeper.
The still picture on the screen is recorded for about seven seconds. The sound during those seven seconds is also recorded.
The still image is displayed on the screen until recording is completed.

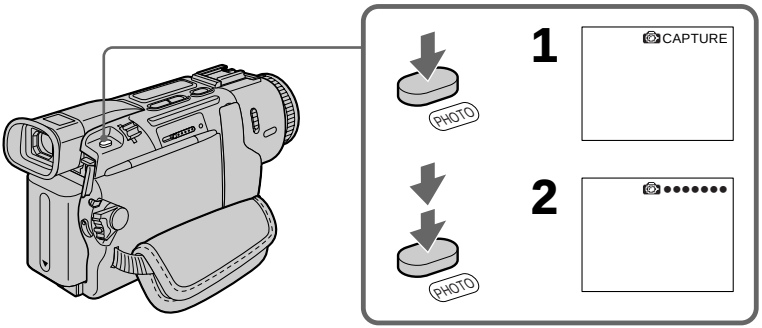


**Notes**

- During tape photo recording, you cannot change the mode or setting.
- When recording a still picture, do not shake your camcorder. The picture may fluctuate.
- The PHOTO button does not work:
  – while the fader function is set or in use
  – while the digital effect function is set or in use

**If you record a moving subject with the tape photo recording function**
When you play back the still picture on other equipment, the picture may fluctuate.

**To use the tape photo recording function using the Remote Commander**
Press PHOTO on the Remote Commander. Your camcorder records a picture on the screen immediately.

**To use the tape photo recording function during normal CAMERA recording**
Press PHOTO deeper. The still picture is then recorded for about seven seconds and your camcorder returns to the standby mode. You cannot select another still picture.

**To record clear and less fluctuated still pictures**
We recommend that you record on "Memory Stick"s. (DCR-TRV17 only)

## Self-timer recording

You can record still images on tapes with the self-timer. You can also use the Remote Commander for this operation.

**(1)** In the standby mode, press MENU to display the menu settings.
**(2)** Turn the SEL / PUSH EXEC dial to select C, then press the dial.
**(3)** Turn the SEL / PUSH EXEC dial to select SELFTIMER, then press the dial.
**(4)** Turn the SEL / PUSH EXEC dial to select ON, then press the dial.
**(5)** Press MENU to make the menu settings disappear.
**(6)** Press PHOTO deeper.
Self-timer starts counting down from 10 with a beep sound. In the last two seconds of the countdown, the beep sound gets faster, then recording starts automatically.

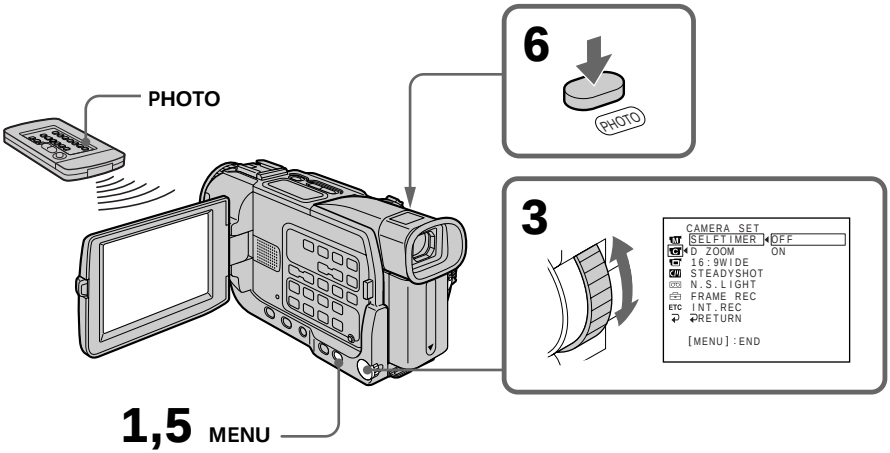


### To cancel self-timer recording

Set SELFTIMER to OFF in the menu settings in the standby mode.
You cannot cancel the self-timer recording using the Remote Commander.

**Note**

The self-timer recording mode is automatically cancelled when:
– Self-timer recording is finished.
– The POWER switch is set to OFF (CHG) or VCR.

## Printing the still picture

You can print a still picture by using the video printer (optional). Connect the video printer using the A / V connecting cable supplied with your camcorder.
Connect it to the AUDIO / VIDEO jack and connect the yellow plug of the cable to the video input of the video printer. Refer to the operating instructions of the video printer as well.

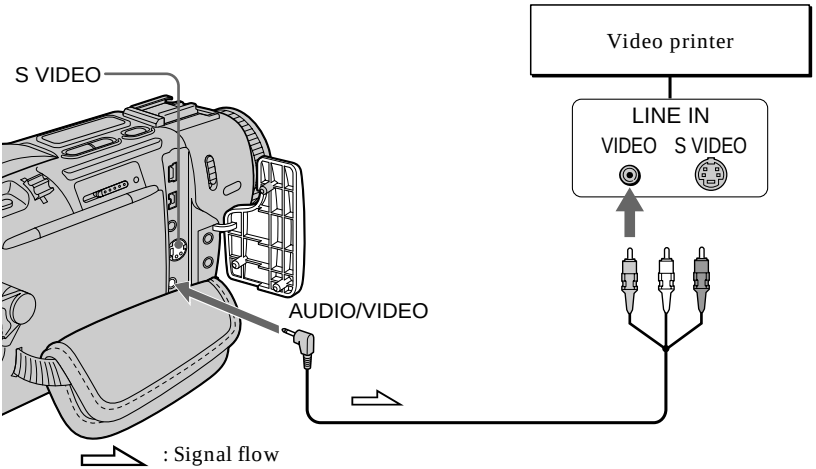


**If the video printer is equipped with S video input**
Use the S video connecting cable (optional). Connect it to the S VIDEO jack and the S video input of the video printer.

# Adjusting the white balance manually

You can manually adjust and set the white balance. This adjustment makes white subjects look white and allows more natural color balance. Normally white balance is automatically adjusted.

**(1)** In CAMERA or MEMORY (DCR-TRV17 only) mode, select WHT BAL in M in the menu settings (p. 97).
**(2)** Select the desired white balance mode in the menu settings.

(INDOOR) :
- Lighting condition changes quickly
- Too bright place such as photography studios
- Under sodium lamps or mercury lamps

(OUTDOOR) :
- Recording a sunset / sunrise, just after sunset, just before sunrise, neon signs, or fireworks
- Under a color matching fluorescent lamp

HOLD :
Recording a single-colored subject or background

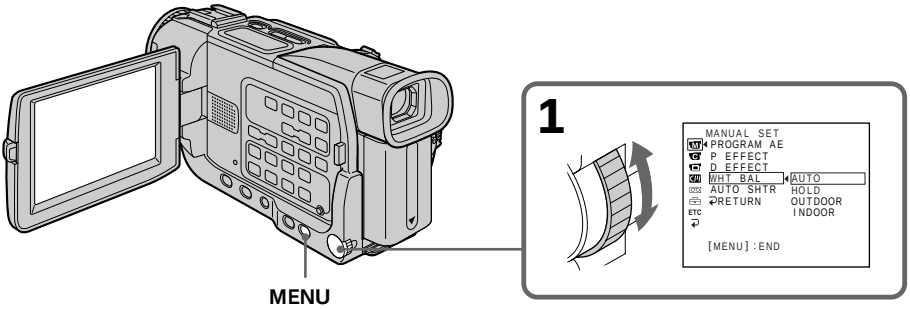


## To return to the automatic white balance mode

Set WHT BAL to AUTO in the menu settings.

---

### If the picture is being taken in a studio lit by TV lighting

We recommend that you record in the indoor mode.

### When you record under fluorescent lighting

Use the automatic white balance or hold mode.
Your camcorder may not adjust the white balance correctly in the indoor mode.

### In the automatic white balance mode

Point your camcorder at a white subject for about 10 seconds after setting the POWER switch to CAMERA to get a better adjustment when:
- You detach the battery for replacement.
- You bring your camcorder to the outdoors from the interior of a house holding the exposure, or vice versa.

### In the hold white balance mode

Set the white balance to AUTO and reset to HOLD after a few seconds when:
- You change the PROGRAM AE mode.
- You bring your camcorder to the outdoors from the interior of a house, or vice versa.

# Using the wide mode

You can record a 16:9 wide picture to watch on the 16:9 wide-screen TV (16:9WIDE). Black bands appear on the screen during recording in 16:9WIDE mode **[a].** The picture during a playback on a normal TV **[b]** or on a wide-screen TV **[c]** is compressed in the widthwise direction. If you set the screen mode of the wide-screen TV to the full mode, you can watch pictures of normal images **[d].**

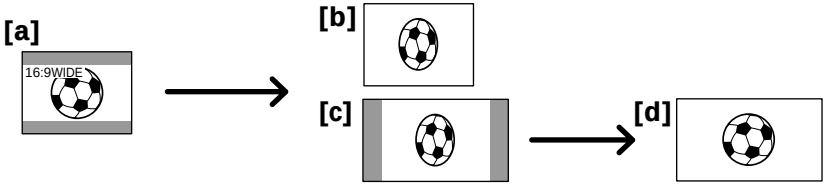


In the standby mode, set 16:9WIDE to ON in in the menu settings (p. 97).

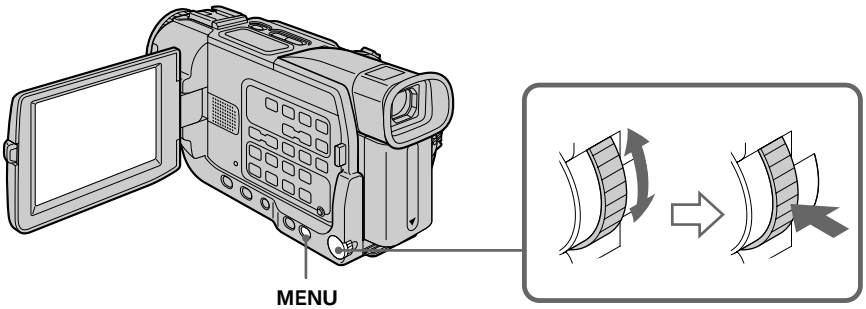


## To cancel the wide mode

Set 16:9WIDE to OFF in the menu settings.

---

**In the wide mode, you cannot select the following functions:**
– OLD MOVIE
– BOUNCE

**During recording**
You cannot select or cancel the wide mode. When you cancel the wide mode, set your camcorder to the standby mode and then set 16:9WIDE to OFF in the menu settings.

**Connection for a TV**
Pictures recorded in the 16:9WIDE mode automatically appear on the TV screen at full size when:
– You connect your camcorder to a TV that is compatible with the video ID (ID-1 / ID-2) system.
– You connect your camcorder to the S video jack on the TV.

**ID-1 system**
The ID-1 system sends aspect ratio information (16:9, 4:3, or letter box) with video signals. If you connect a TV compatible with the ID-1 system, the screen size is automatically selected.

**ID-2 system**
The ID-2 system sends a copyright protection signal with ID-1 signals inserted between video signals when you connect your camcorder to other equipment using the A / V connecting cable.

# Using the fader function

You can fade in or out to give your recording a professional appearance.

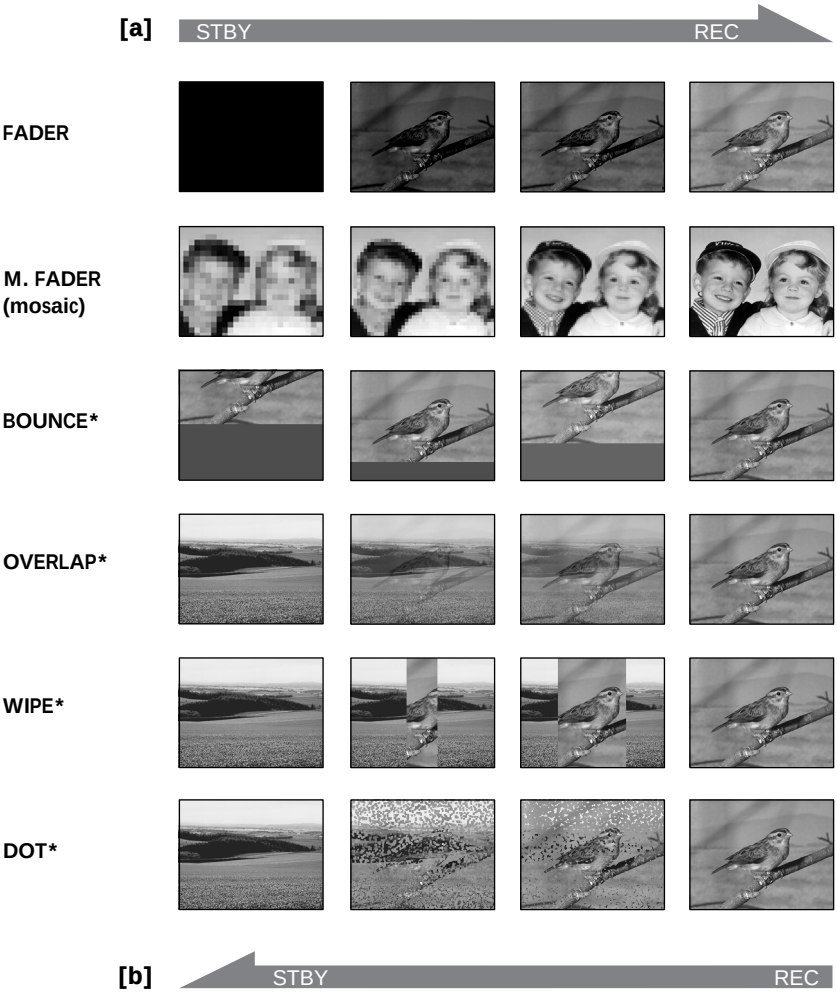


**MONOTONE**
When fading in, the picture gradually changes from black-and-white to color.
When fading out, the picture gradually changes from color to black-and-white.

***** Fade in only

**(1) When fading in [a]**
In the standby mode, press FADER until the desired fader indicator flashes.
**When fading out [b]**
In the recording mode, press FADER until the desired fader indicator flashes.
The indicator changes as follows:

FADER → M.FADER → BOUNCE → MONOTONE → OVERLAP → WIPE → DOT → no indicator

The last selected fader mode is indicated first of all.

**(2)** Press START/STOP. The fader indicator stops flashing.
After the fader in/out is carried out, your camcorder automatically returns to the normal mode.

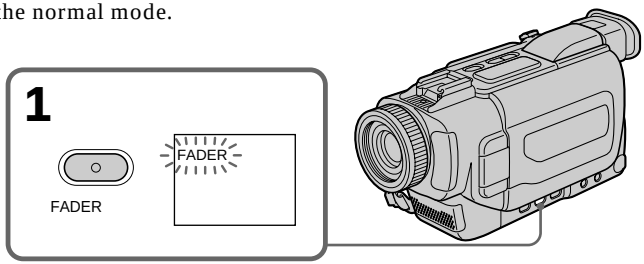


## To cancel the fader function

Before pressing START/STOP, press FADER until the indicator disappears.

---

**Note**

You cannot use the following functions while using the fader function. Also, you cannot use the fader function while using the following functions:
– Digital effect
– Low lux mode of PROGRAM AE (Overlap, Wipe, or Dot function only)(The low lux indicator flashes.)
– Super NightShot
– Tape Photo recording

**When the OVERLAP, WIPE, or DOT indicator appear in the standby mode**

Your camcorder automatically stores the image recorded on a tape. As the image is being stored, the indicators flash fast, and the playback picture disappears. At this stage, the picture may not be recorded clearly, depending on the tape condition.

**While using the bounce function, you cannot use the following functions:**
– Exposure
– Focus
– Zoom
– Picture effect

**Note on the bounce function**

The BOUNCE indicator does not appear in the following mode or functions:
– D ZOOM is activated in the menu settings
– 16:9 wide
– Picture effect
– PROGRAM AE

**While in MEMORY mode (DCR-TRV17 only)**

You cannot use the fader function.

# Using special effects – Picture effect

You can digitally process images to obtain special effects like those in films or on TV.

**NEG. ART [a]** : The color and brightness of the picture are reversed.
**SEPIA** : The picture gets sepia.
**B&W** : The picture appears in monochrome (black-and-white).
**SOLARIZE [b]** : The light intensity is clearer, and the picture looks like an illustration.
**SLIM [c]** : The picture expands vertically.
**STRETCH [d]** : The picture expands horizontally.
**PASTEL [e]** : The contrast of the picture is emphasized, and the picture looks like an animated cartoon.
**MOSAIC [f]** : The picture gets mosaic-patterned.

**[a]**

**[b]**

**[c]**

**[d]**

**[e]**

**[f]**

**(1)** In CAMERA mode, select P EFFECT in [VM] in the menu settings. (p. 97).
**(2)** Select the desired picture effect mode in the menu settings.

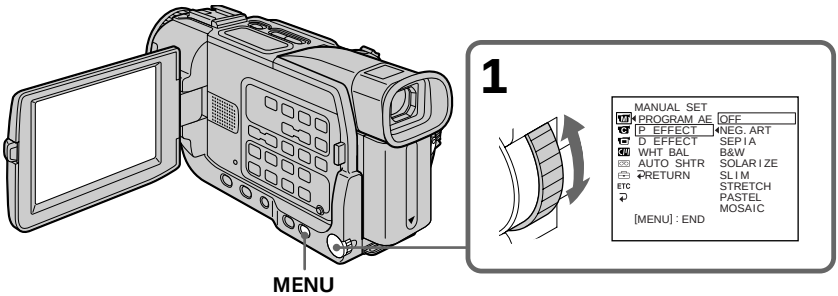


## To cancel the picture effect function

Set P EFFECT to OFF in the menu settings.

---

**While using the picture effect function, you cannot select the following functions:**
– OLD MOVIE
– BOUNCE

**When you turn the power off**
Your camcorder automatically returns to the normal mode.

# Using special effects – Digital effect

You can add special effects to recorded pictures using the various digital functions. The sound is recorded normally.

**STILL**
You can record a still picture so that it is superimposed on a moving picture.

**FLASH (FLASH MOTION)**
You can record still pictures successively at constant intervals.

**LUMI. (LUMINANCEKEY)**
You can swap a brighter area in a still picture with a moving picture.

**TRAIL**
You can record the picture so that an incidental image like a trail is left.

**SLOW SHTR (SLOW SHUTTER)**
You can slow down the shutter speed. The slow shutter mode is good for recording dark pictures more brightly.

**OLD MOVIE**
You can add an old movie type atmosphere to pictures. Your camcorder automatically sets the wide mode to ON and picture effect to SEPIA, and the appropriate shutter speed.

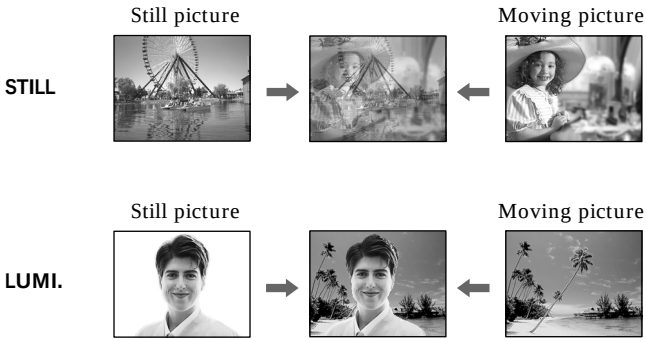

**(1)** In CAMERA mode, select D EFFECT in [VTR] in the menu settings (p. 97).
**(2)** Select the desired digital effect mode in the menu settings, then press the SEL / PUSH EXEC dial.
The bars appear, in the STILL and LUMI. modes. The still image is stored in memory.
**(3)** Turn the SEL / PUSH EXEC dial to adjust the effect, then press the dial.

**Items to be adjusted**

| | |
|---|---|
| STILL | The rate of the still picture you want to superimpose on the moving picture |
| FLASH | The interval of flash motion |
| LUMI. | The color scheme of the area in the still picture which is to be swapped with a moving picture |
| TRAIL | The time until the incidental image vanishes |
| SLOW SHTR | Shutter speed. The larger the shutter speed number, the slower the shutter speed. |
| OLD MOVIE | No adjustment necessary |

The more bars there are on the screen, the stronger the digital effect. The bars appear in the following modes: STILL, FLASH, LUMI. and TRAIL.

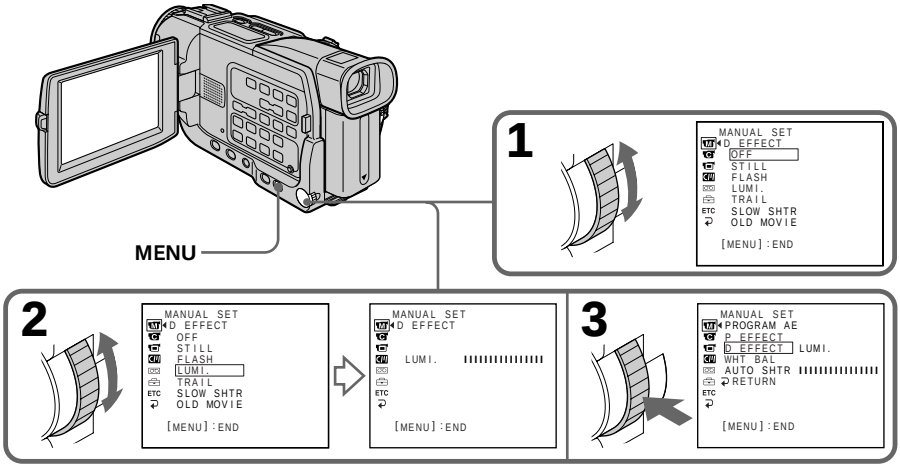


## To cancel the digital effect function

Set D EFFECT to OFF in the menu settings.

### Notes

- The following functions do not work during digital effect:
  - Fader
  - Low lux mode of PROGRAM AE (The low lux indicator flashes.)
  - Tape photo recording
  - Super NightShot
- The PROGRAM AE function does not work in the slow shutter mode.
- The following functions do not work in the old movie mode:
  - Wide mode
  - Picture effect
  - PROGRAM AE

### When you turn the power off

The digital effect will be automatically canceled.

### When recording in the slow shutter mode

Auto focus may not be effective. Focus manually using a tripod.

### Shutter speed

| Shutter speed number | Shutter speed |
|---|---|
| SLOW SHTR 1 | 1/30 |
| SLOW SHTR 2 | 1/15 |
| SLOW SHTR 3 | 1/8 |
| SLOW SHTR 4 | 1/4 |

# Using the PROGRAM AE function

You can select PROGRAM AE (Auto Exposure) mode to suit your specific shooting requirements.

### Spotlight
This mode prevents people's faces, for example, from appearing excessively white when shooting subjects lit by strong light in the theater.

### Soft portrait
This mode brings out the subject while creating a soft background for subjects such as people or flowers.

### Sports lesson
This mode minimizes shake on fast-moving subjects such as in tennis or golf.

### Beach & ski
This mode prevents people's faces from appearing dark in strong light or reflected light, such as at a beach in midsummer or on a ski slope.

### Sunset & moon
This mode allows you to maintain atmosphere when you are recording sunsets, general night views, fireworks displays and neon signs.

### Landscape
This mode is for when you are recording distant subjects such as mountains and prevents your camcorder from focusing on glass or metal mesh in windows when you are recording a subject behind glass or a screen.

### Low lux
This mode makes subjects brighter in insufficient light.

**(1)** Press MENU to display menu settings in CAMERA or MEMORY (DCR-TRV17 only) mode.
**(2)** Turn the SEL / PUSH EXEC dial to select , then press the dial (p. 97).
**(3)** Turn the SEL / PUSH EXEC dial to select PROGRAM AE, then press the dial.
**(4)** Turn the SEL / PUSH EXEC dial to select the desired mode.

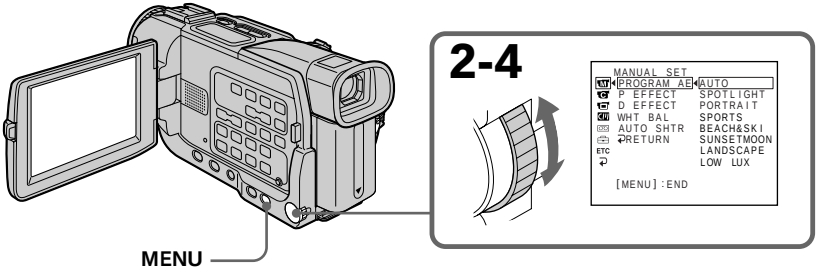


## To turn the PROGRAM AE function off

Set PROGRAM AE to AUTO in the menu settings.

### Notes

- Because your camcorder is set to focus only on subjects in the middle to far distance, you cannot take close-ups in the following mode:
  – Spotlight
  – Sports lesson
  – Beach & ski
- Your camcorder is set to focus only on distant subjects in the following modes:
  – Sunset & moon
  – Landscape
- The following functions do not work in the PROGRAM AE mode:
  – Slow shutter
  – OLD MOVIE
  – BOUNCE
- The following functions do not work in the low lux mode:
  – Digital effect
  – Overlap
  – Wipe
  – Dot
- While setting the NIGHTSHOT to ON, the PROGRAM AE function does not work. (The indicator flashes.)
- While shooting in MEMORY mode (DCR-TRV17 only), the following modes do not work (The indicator flashes.) :
  – Low lux
  – Sports lesson

**While WHT BAL is set to AUTO in the menu settings**

The white balance is adjusted even if the PROGRAM AE function is selected.

**Even if the PROGRAM AE function is selected**

You can adjust the exposure.

**If you are recording under a discharge tube such as a fluorescent lamp, sodium lamp or mercury lamp**

Flickering or changes in color may occur in the following modes. If this happens, turn the PROGRAM AE function off.

– Soft portrait
– Sports lesson

# Adjusting the exposure manually

You can manually adjust and set the exposure. Adjust the exposure manually in the following cases:
– The subject is backlit
– Bright subject and dark background
– To record dark pictures (e.g. night scenes) faithfully

**(1)** In CAMERA or MEMORY (DCR-TRV17 only) mode, press EXPOSURE. The exposure indicator appears.
**(2)** Turn the SEL / PUSH EXEC dial to adjust the brightness.

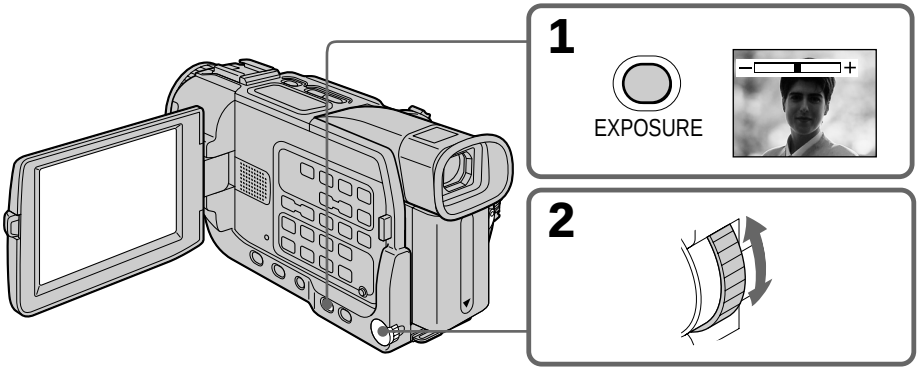


### To return to the automatic exposure mode

Press EXPOSURE again.

---

**Note**

When you adjust the exposure manually, the backlight function does not work.

**Your camcorder automatically returns to the automatic exposure mode:**
– If you change the PROGRAM AE mode.
– If you slide NIGHTSHOT to ON.

# Focusing manually

You can gain better results by manually adjusting the focus in the following cases:
- The autofocus mode is not effective when shooting
  - subjects through glass coated with water droplets
  - horizontal stripes
  - subjects with little contrast with backgrounds such as walls and sky
- When you want to change the focus from a subject in the foreground to a subject in the background
- Shooting a stationary subject when using a tripod

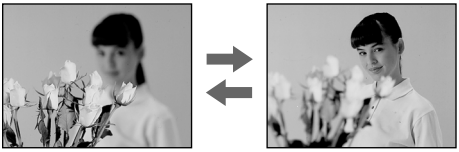

**(1)** In CAMERA or MEMORY (DCR-TRV17 only) mode, press FOCUS lightly. The indicator appears.
**(2)** Turn the focus ring to sharpen focus.

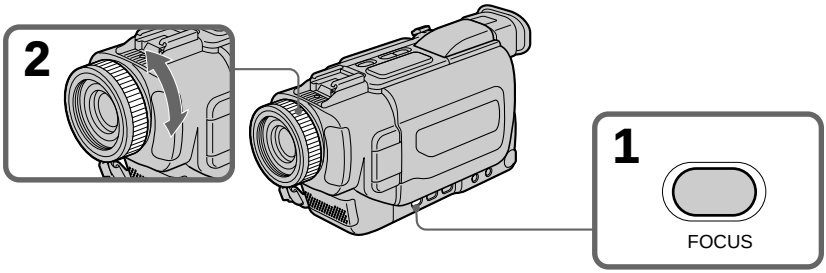


## To return to the autofocus mode

Press FOCUS lightly to turn off the indicator.

## To record distant subjects

When you press FOCUS down firmly, the lens focuses on and indicator appears. When you release FOCUS, your camcorder returns to the manual focus mode. Use this mode when your camcorder focuses on near objects even though you are trying to shoot a distant object.

---

### To focus precisely

It is easier to focus on the subject if you adjust the zoom to shoot at the "W" (wide-angle) after focusing at the "T" (telephoto) position.

### When you shoot close to the subject

Focus at the end of the "W" (wide-angle) position.

### changes as follows:

when recording a distant subject.
when the subject is too close to focus on.

# Interval recording

You can make a time-lapse recording by setting the camcorder to automatically record and standby sequentially. You can achieve an excellent recording for flowering, emergence, etc., with this function.

**Example**

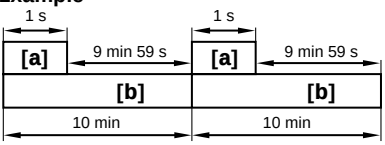


**[a]** Recording time
**[b]** Waiting time

**(1)** Press MENU to display the menu in standby mode.
**(2)** Turn the SEL / PUSH EXEC dial to select , then press the dial.
**(3)** Turn the SEL / PUSH EXEC dial to select INT. REC, then press the dial.
**(4)** Turn the SEL / PUSH EXEC dial to select SET, then press the dial.
**(5)** Set INTERVAL and REC TIME.
① Turn the SEL / PUSH EXEC dial to select INTERVAL, then press the dial.
② Turn the SEL / PUSH EXEC dial to select the desired interval time, then press the dial.
The time: 30SEC ⟷ 1MIN ⟷ 5MIN ⟷ 10MIN
③ Turn the SEL / PUSH EXEC dial to select REC TIME, then press the dial.
④ Turn the SEL / PUSH EXEC dial to select the desired recording time, then press the dial.
The time: 0.5SEC ⟷ 1SEC ⟷ 1.5SEC ⟷ 2SEC
⑤ Turn the SEL / PUSH EXEC dial to select ↩ RETURN, then press the dial twice.

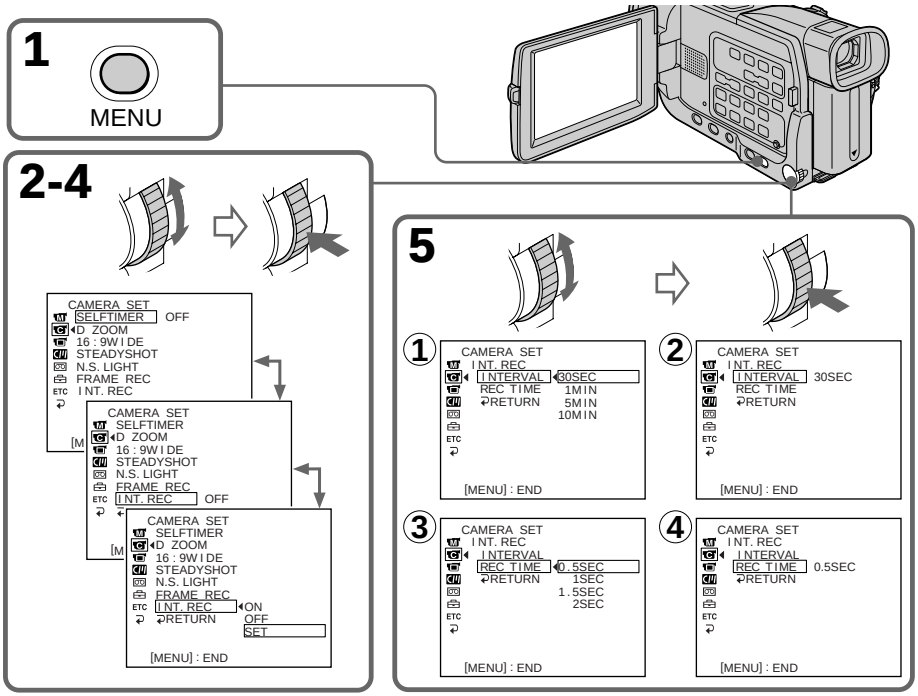

**(6)** Turn the SEL/PUSH EXEC dial to select ON, then press the dial.
**(7)** Press MENU to erase the menu display. The interval recording indicator flashes.
**(8)** Press START/STOP to start interval recording. The interval recording indicator lights up.

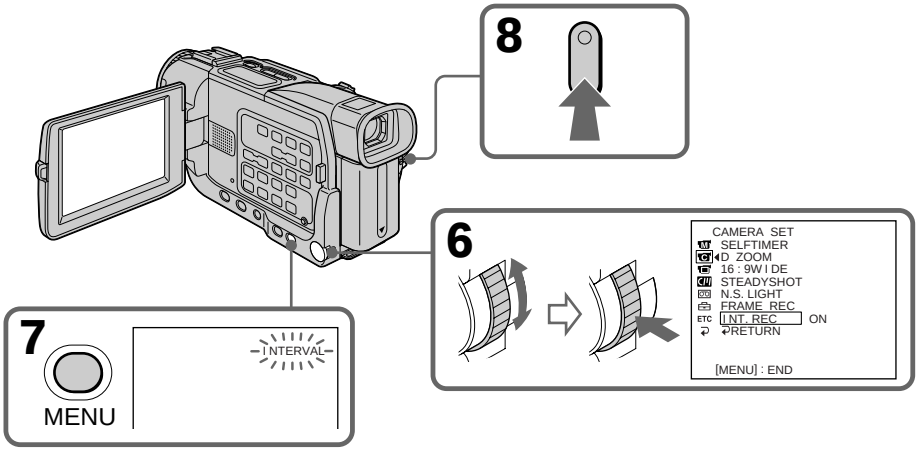


## To cancel the interval recording

- Set INT. REC to OFF in the menu settings.
- Set the POWER switch to OFF (CHG), VCR or MEMORY (DCR-TRV17 only).

## To stop the interval recording momentarily and perform normal recording

Press START/STOP. You can perform normal recording only once. To cancel the normal recording, press START/STOP again.

---

**Note on interval recording (DCR-TRV17 only)**

You cannot do interval recording in memory mode.

**On recording time**

There may be a discrepancy in recording time of up to +/– 6 frames from the selected time.

# Frame by frame recording – Cut recording

You can make a recording with a stop-motion animated effect using cut recording. To create this effect, alternately move the subject a little and make a cut recording. We recommend that you use a tripod, and operate the camcorder using the Remote Commander after step 6.

**(1)** Press MENU to display the menu in standby mode.
**(2)** Turn the SEL / PUSH EXEC dial to select , then press the dial.
**(3)** Turn the SEL / PUSH EXEC dial to select FRAME REC, then press the dial.
**(4)** Turn the SEL / PUSH EXEC dial to select ON, then press the dial.
**(5)** Press MENU to erase the menu display.
The FRAME REC indicator lights up.
**(6)** Press START / STOP to start cut recording. The camcorder makes a recording for about six frames, and returns to recording standby.
**(7)** Move the subject, and repeat step 6.

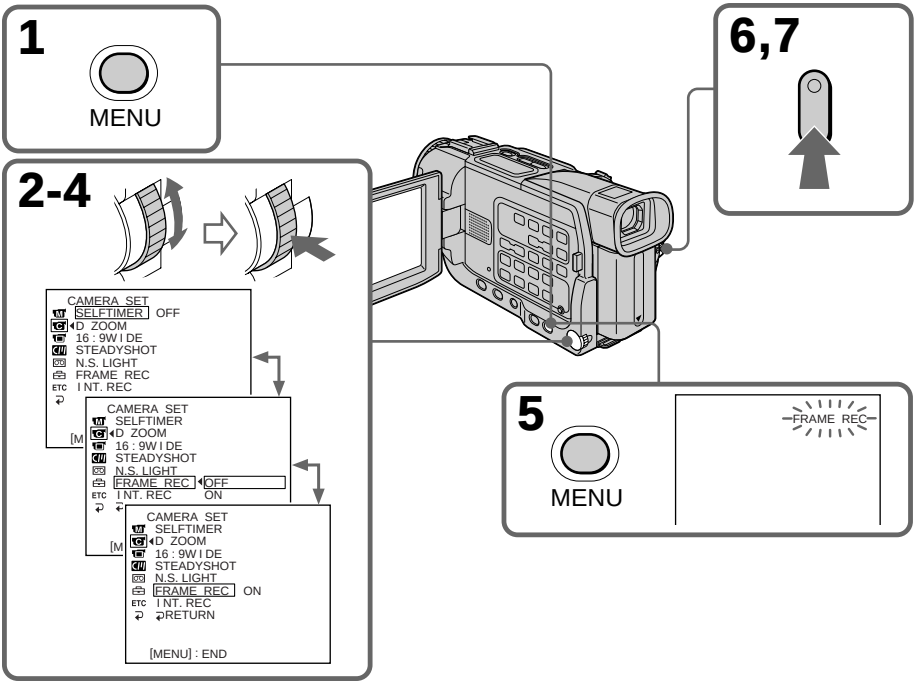


## To cancel the cut recording

- Set FRAME REC to OFF in the menu settings.
- Set the POWER switch to OFF (CHG), VCR, or MEMORY (DCR-TRV17 only).

### Notes on cut recording

- The last recorded cut is longer than other cuts.
- The proper remaining tape time is not indicated if you use this function continuously.

# Playing back a tape with picture effects

During playback, you can process a scene using the picture effect functions: NEG. ART, SEPIA, B&W and SOLARIZE.

**(1)** In the playback or playback pause mode, select P EFFECT in [M] in the menu settings (p. 97).
**(2)** Select the desired mode by turning the SEL / PUSH EXEC dial.
For details of each picture effect function, see page 45.

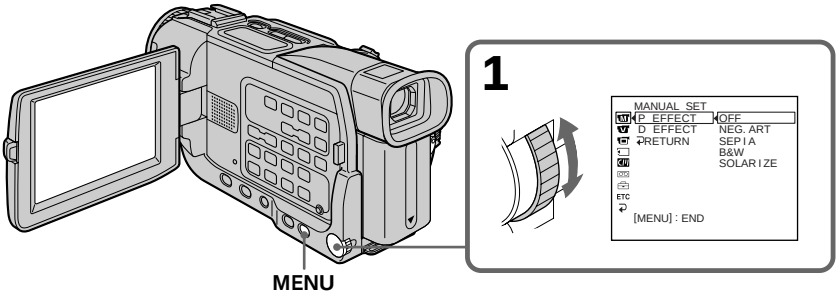


## To cancel the picture effect function

Set P EFFECT to OFF in the menu settings.

### Notes

- You cannot process the picture that is input from other equipment using the picture effect function.
- To record pictures that you have processed using the picture effect function, record the pictures on the VCR, using your camcorder as a player.

### Pictures processed by the picture effect function

Pictures processed by the picture effect function are not output through the i DV IN / OUT jack.

### When you set the POWER switch to OFF (CHG) or stop playing back

The picture effect function is automatically canceled.

# Playing back a tape with digital effects

During playback, you can process a scene using the digital effect functions: STILL, FLASH, LUMI. and TRAIL.

**(1)** In the playback or playback pause mode, select D EFFECT in in the menu settings (p. 97).
**(2)** Select the desired digital effect mode in the menu settings, then press the SEL / PUSH EXEC dial. The digital effect indicator lights up and the bars appear. In the STILL or LUMI. mode, the image where you press the SEL / PUSH EXEC dial is stored in memory as a still image.
**(3)** Turn the SEL / PUSH EXEC dial to adjust the effect, then press the dial.
For details of each digital effect function, see page 46.

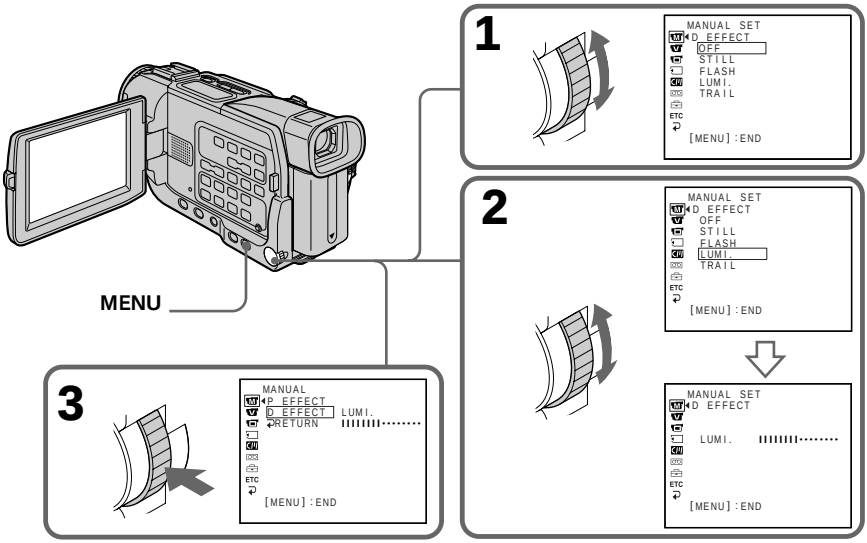


## To cancel the digital effect function

Set D EFFECT to OFF in the menu settings.

---

### Notes

- You cannot process externally input scenes using the digital effect function.
- To record pictures that you have processed using the digital effect function, record the pictures on the VCR, using your camcorder as a player.

### Pictures processed by the digital effect function

- Pictures processed by the digital effect function are not output through the i DV IN / OUT jack.
- You cannot use the tape PB ZOOM function for pictures processed by digital effect function.

### When you set the POWER switch to OFF (CHG) or stop playing back

The digital effect function is automatically canceled.

# Enlarging images recorded on tapes – Tape PB ZOOM

You can enlarge still and moving playback pictures. You can also dub the enlarged pictures to tapes or copy to "Memory Stick"s (DCR-TRV17 only) (p. 121).
You can also enlarge still play back images recorded on "Memory Stick" (DCR-TRV17 only) (p. 140).

**(1)** In the playback or playback pause mode, press PB ZOOM on your camcorder. The image is enlarged, and ↑↓←→ appears on the screen.
**(2)** Turn the SEL / PUSH EXEC dial to move the enlarged image, then press the dial.
↑ : The image moves downwards.
↓ : The image moves upwards.
**(3)** Turn the SEL / PUSH EXEC dial to move the enlarged image, then press the dial.
→ : The image moves leftward (Turn the dial upwards.)
← : The image moves rightward (Turn the dial downwards.)

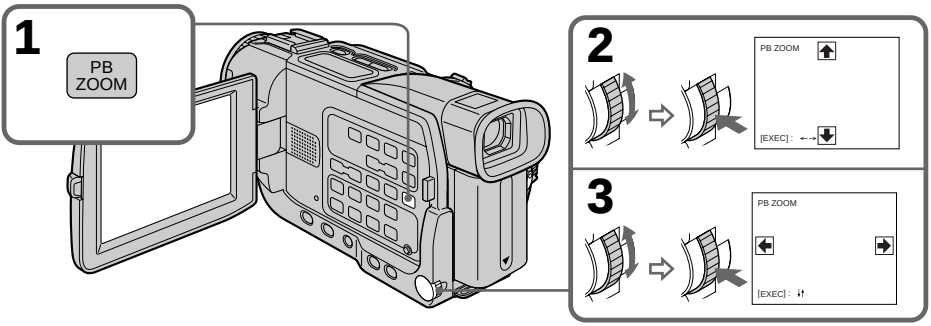


## To cancel the PB ZOOM function

Press PB ZOOM.

---

**Note**

You cannot process externally input scenes using the PB ZOOM function with your camcorder.

**The PB ZOOM function is automatically canceled when you operate the following functions:**

– Set the POWER switch to OFF (CHG)
– Stop playback
– Display the menu settings

**Pictures in the PB ZOOM**

Pictures in the PB ZOOM mode are not output through the i DV IN / OUT jack.

# Quickly locating a scene using the zero set memory function

Your camcorder goes forward or backward to automatically stop at a desired scene having a tape counter value of “0:00:00”. You can do this with the Remote Commander.

**(1)** In the playback mode, press DISPLAY.
**(2)** Press ZERO SET MEMORY at the point you want to locate later. The tape counter shows “0:00:00” and the ZERO SET MEMORY indicator flashes.
**(3)** Press ■ when you want to stop playback.
**(4)** Press ◀◀ to rewind the tape to the tape counter’s zero point. The tape stops automatically when the tape counter reaches approximately zero. The ZERO SET MEMORY indicator disappears and the time code appears.
**(5)** Press ▶. Playback starts.

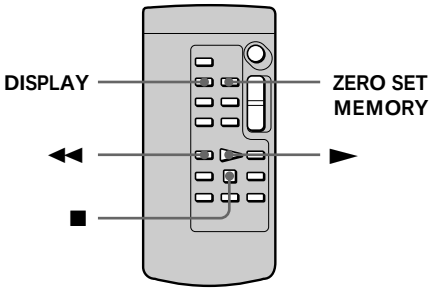


**Notes**
- When you press ZERO SET MEMORY before rewinding the tape, the zero set memory function will be canceled.
- There may be a discrepancy of several seconds from the time code.

**If a tape has a blank portion in the recorded portions**
The zero set memory function may not work correctly.

**Zero set memory functions also in the standby mode**
When you insert a scene in the middle of a recorded tape, press ZERO SET MEMORY at the point you want to end the insertion. Rewind the tape to the insert start point, and start recording. Recording stops automatically at the tape counter zero point. Your camcorder returns to the standby mode.

# Searching the boundaries of recorded tape by title – Title search

CM only

If you use a tape with cassette memory, you can search for the boundaries of recorded tape by title. Use the Remote Commander for this operation.

**Before operation**
Set CM SEARCH in CM to ON in the menu settings (p. 100). (The default setting is ON.)

**(1)** Set the POWER switch to VCR.
**(2)** Press SEARCH MODE on the Remote Commander repeatedly, until the TITLE SEARCH indicator appears.
The indicator changes as follows:
→ TITLE SEARCH → DATE SEARCH → PHOTO SEARCH → PHOTO SCAN → no indicator

**(3)** Press ⏮ or ⏭ on the Remote Commander to select the title for playback.
Your camcorder automatically starts playback of the scene having the title that you selected.

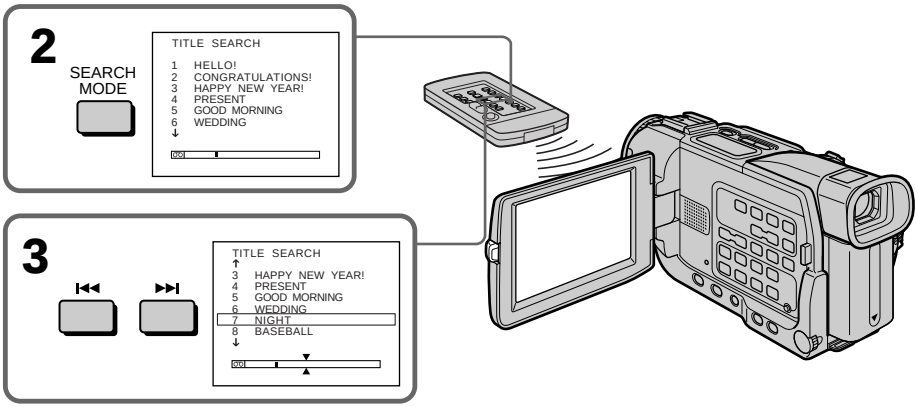


## To stop searching

Press ■.

**If you use a tape without cassette memory**
You cannot superimpose or search a title.

**In the ▭ mark**
- The bar in the ▭ mark indicates the present point on the tape.
- The ⧗ mark in the ▭ indicates the actual point you are trying to search.

**If a tape has a blank portion between recorded portions**
The title search function may not work correctly.

**To superimpose a title**
See page 89.

# Searching a recording by date – Date search

You can automatically search for the point where the recording date changes and start playback from that point. Use a tape with cassette memory for convenience. Use the Remote Commander for this operation.
Use this function to check where recording dates change or to edit the tape at each recording date.

## Searching for the date by using cassette memory

**Before operation**

- You can use this function only when playing back a tape with cassette memory (p. 158).
- Set CM SEARCH in CM to ON in the menu settings (p. 100). (The default setting is ON).

**(1)** Set the POWER switch to VCR.

**(2)** Press SEARCH MODE on the Remote Commander repeatedly, until the DATE SEARCH indicator appears.
The indicator changes as follows:
→ TITLE SEARCH → DATE SEARCH → PHOTO SEARCH → PHOTO SCAN → no indicator

**(3)** Press ⏮ or ⏭ on the Remote Commander to select the date for playback.
Your camcorder automatically starts playback at the beginning of the selected date.

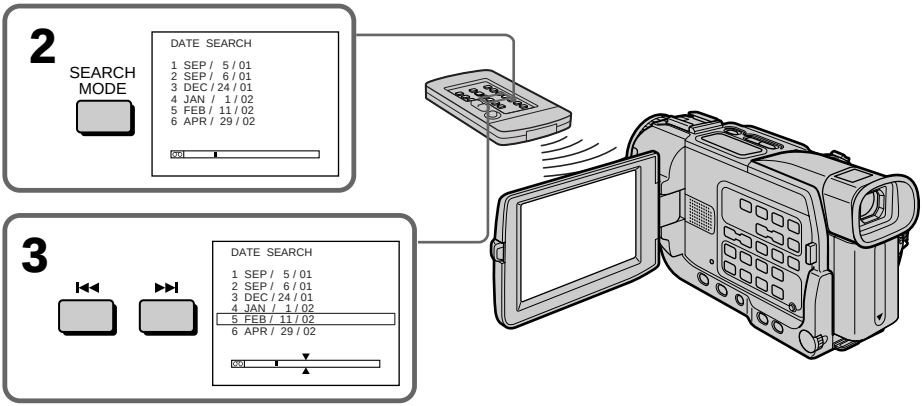


### To stop searching

Press ■.

**Note**

If one day's recording is less than two minutes, your camcorder may not accurately find the point where the recording date changes.

**In the ▭ mark**

- The bar in the ▭ mark indicates the present point on the tape.
- The ⧗ mark in the ▭ indicates the actual point you are trying to search.

**If a tape has a blank portion between recorded portions**

The date search function may not work correctly.

**Cassette memory**

The tape cassette memory can hold six recording date data. If you search the date among seven or more data, see "Searching for the date without using cassette memory" below.

## Searching for the date without using cassette memory

**(1)** Set the POWER switch to VCR.

**(2)** Set CM SEARCH in CM to OFF in the menu settings (p. 100).

**(3)** Press SEARCH MODE on the Remote Commander repeatedly, until the DATE SEARCH indicator appears.
The indicator changes as follows:
→ DATE SEARCH → PHOTO SEARCH → PHOTO SCAN → no indicator

**(4)** Press ⏮ on the Remote Commander to search for the previous date or press ⏭ on the Remote Commander to search for the next date. Your camcorder automatically starts playback at the point where the date changes. Each time you press ⏮ or ⏭, your camcorder searches for the previous or next date.

### To stop searching

Press ■.

# Searching for a photo – Photo search/Photo scan

You can search for a still picture you have recorded on a tape **(photo search)**.
You can also search for still pictures one after another and display each picture for five seconds automatically regardless of cassette memory **(photo scan)**. Use the Remote Commander for these operations.
Use this function to check or edit still pictures.

## Searching for a photo by using cassette memory

**Before operation**

- You can use this function only when playing back a tape with cassette memory.
- Set CM SEARCH in CM to ON in the menu settings (p. 100). (The default setting is ON.)

**(1)** Set the POWER switch to VCR.

**(2)** Press SEARCH MODE on the Remote Commander repeatedly, until the PHOTO SEARCH indicator appears.
The indicator changes as follows:
→ TITLE SEARCH → DATE SEARCH → PHOTO SEARCH → PHOTO SCAN → no indicator

**(3)** Press ⏮ or ⏭ on the Remote Commander to select the date for playback.
Your camcorder automatically starts playback of the photo having the date that you selected.

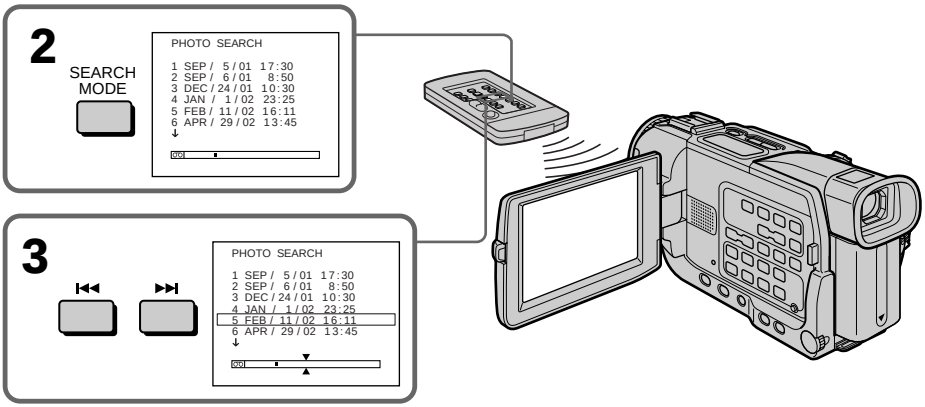


### To stop searching

Press ■.

---

**In the ▭ mark**

- The bar in the ▭ mark indicates the present point on the tape.
- The ⧗ mark in the ▭ indicates the actual point you are trying to search.

**If a tape has a blank portion between recorded portions**

The photo search / photo scan function may not work correctly.

**The available number of photos that can be searched using the cassette memory**

The available number is up to 12 photos. However, you can search 13 photos or more using the scanning photo function.

## Searching for a photo without using cassette memory

**(1)** Set the POWER switch to VCR.
**(2)** Set CM SEARCH in CM to OFF in the menu settings (p. 100).
**(3)** Press SEARCH MODE on the Remote Commander repeatedly, until the PHOTO SEARCH indicator appears.
The indicator changes as follows:
DATE SEARCH → PHOTO SEARCH → PHOTO SCAN → no indicator
**(4)** Press ⏮ or ⏭ on the Remote Commander to select the photo for playback.
Each time you press ⏮ or ⏭, your camcorder searches for the previous or next photo.
Your camcorder automatically starts playback of the photo.

### To stop searching

Press ■.

## Scanning photo

**(1)** Set the POWER switch to VCR.
**(2)** Press SEARCH MODE on the Remote Commander repeatedly, until the PHOTO SCAN indicator appears.
The indicator changes as follows:
DATE SEARCH → PHOTO SEARCH → PHOTO SCAN → no indicator
**(3)** Press ⏮ or ⏭ on the Remote Commander.
Each photo is played back for about five seconds automatically.

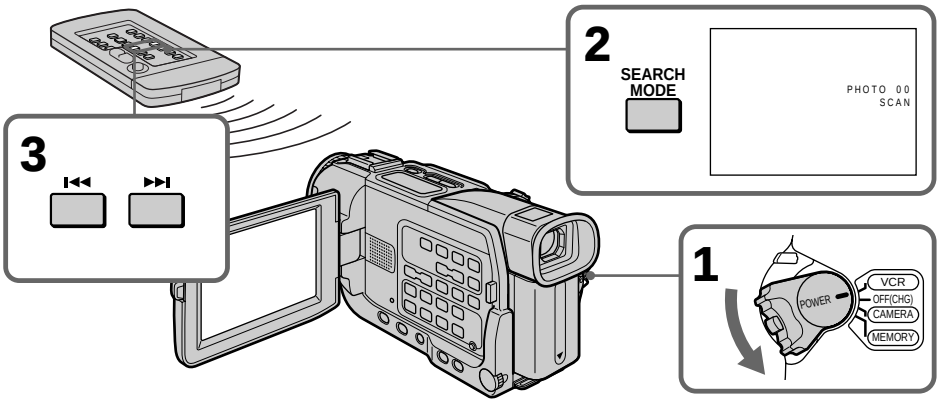


### To stop scanning

Press ■.

# Dubbing a tape

## Using the A/V connecting cable

You can dub or edit on the VCR connected to your camcorder using your camcorder as a player.
Connect your camcorder to the VCR using the A/V connecting cable supplied with your camcorder.

### Before operation

- Set DISPLAY to LCD in the menu settings. (The defalt setting is LCD.)
- Press the following buttons to make the indicator disappear so that they will not be superimposed on the edited tape:
  – DISPLAY
  – DATA CODE on the Remote Commander
  – SEARCH MODE on the Remote Commander

**(1)** Insert a blank tape (or a tape you want to record over) into the VCR, and insert the recorded tape into your camcorder.
**(2)** Prepare the VCR for recording, then set the input selector to LINE.
Refer to the operating instructions of the VCR.
**(3)** Set the POWER switch to VCR.
**(4)** Play back the recorded tape on your camcorder.
**(5)** Start recording on the VCR. Refer to the operating instructions of your VCR.

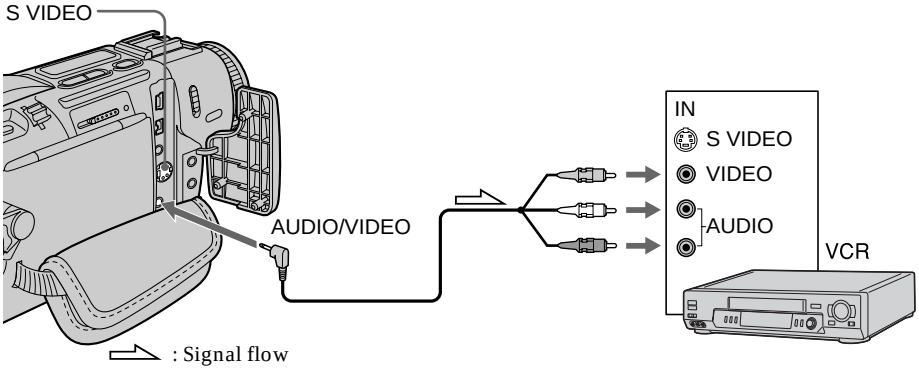


## When you have finished dubbing a tape

Press ■ on both your camcorder and the VCR.

---

### You can edit on VCRs that support the following systems

8 mm, Hi8 Hi8, VHS VHS, S-VHS S-VHS, VHSC VHSC, S-VHSC S-VHSC, Betamax Betamax, ED Beta ED Betamax, Mini DV mini DV, DV DV, Digital8

### If your VCR is a monaural type

Connect the yellow plug of the A/V connecting cable to the video input jack and the white or the red plug to the audio input jack on the VCR or the TV. When the white plug is connected, the left channel audio is output, and the red plug is connected, the right channel audio is output.

**If your VCR has an S video jack**
Connect using an S video cable (optional) to obtain high-quality pictures.
With this connection, you do not need to connect the yellow (video) plug of the A/V connecting cable.
Connect an S video cable (optional) to the S video jacks of both your camcorder and the VCR.
This connection produces higher quality DV format pictures.

## Using the i.LINK cable (DV connecting cable)

Simply connect the i.LINK cable (DV connecting cable) (optional) to i DV IN/OUT and to DV IN of the DV products. With digital-to-digital connection, video and audio signals are transmitted in digital form for high-quality editing. You cannot dub the titles, display indicators or the contents of cassette memory. You can dub the titles, display indicators, the contents of cassette memory or letters on the "Memory Stick" index screen (DCR-TRV17 only).
Set the input selector on the VCR to the DV input position if the VCR is equipped with the input selector.



**(1)** Insert a blank tape (or a tape you want to record over) into the VCR, and insert the recorded tape into your camcorder.
**(2)** Prepare the VCR for recording.
Set the input selector to LINE. Refer to the operating instructions of the VCR.
**(3)** Set the POWER switch to VCR.
**(4)** Play back the recorded tape on your camcorder.
**(5)** Start recording on the VCR. Refer to the operating instractions of your VCR.

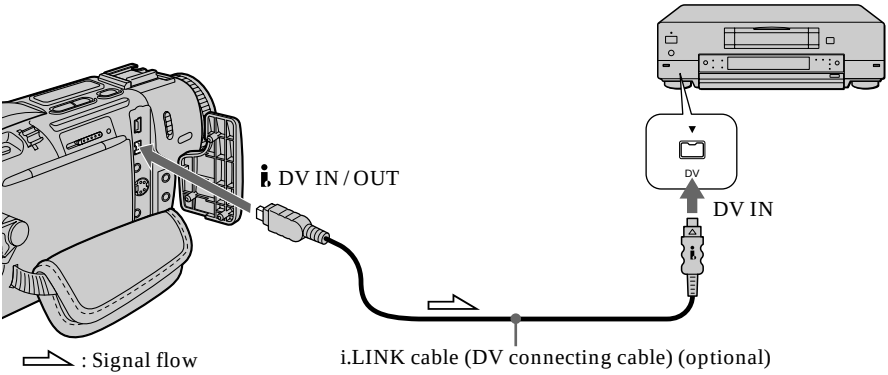


## When you have finished dubbing a tape

Press ■ on both your camcorder and the connected DV product.

---

**You can connect one VCR only using the i.LINK cable (DV connecting cable)**
See page 162 for more information about i.LINK.

**The following functions do not work during digital editing:**
– Digital effect
– PB ZOOM
– Picture effect

**If you record a playback pause picture with the i DV IN/OUT jack**
The recorded picture becomes rough. And when you play back the picture using the other video equipment, the picture may jitter.

# Dubbing only desired scenes – Digital program editing

You can duplicate selected scenes (programs) for editing onto a tape without operating the VCR.
Scenes can be selected by frame. You can set up to 20 programs.

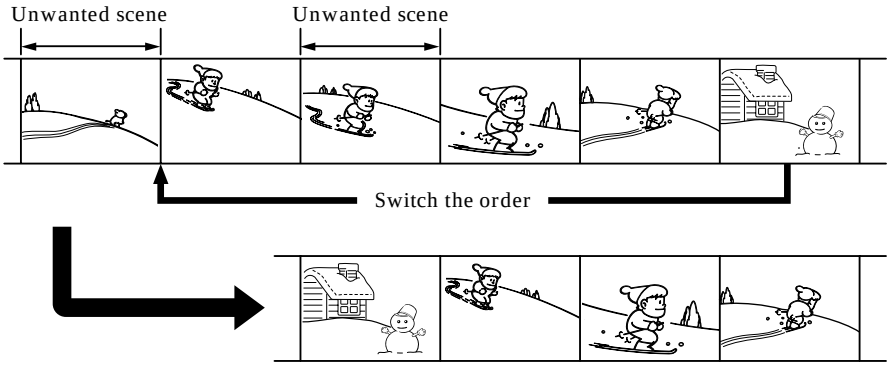


### Before operating the Digital program editing function

**Step 1** Connecting the VCR (p. 68).
**Step 2** Setting the VCR for operation (p. 69, 73).
**Step 3** Adjusting the synchronicity of the VCR (p. 73).
When you dub using the same VCR again, you can skip steps 2 and 3.

### Using the Digital program editing function

**Operation 1** Making the program (p. 76).
**Operation 2** Performing Digital program editing (dubbing a tape) (p. 78).

## Step 1: Connecting the VCR

You can connect both an A/V connecting cable and an i.LINK cable (DV connecting cable).
When you use the A/V connecting cable, connect the devices as illustrated in page 66.
When you use an i.LINK cable (DV connecting cable), connect the devices as illustrated in page 67.

**Notes**

- You cannot dub titles, display indicators, or the contents of cassette memory.
- When you connect with an i.LINK cable (DV connecting cable), you may not be able to operate the dubbing function correctly, depending on the VCR.
  Set CONTROL to IR in the menu settings of your camcorder .
- When editing digital video, the operation signals cannot be sent with LANC.

**If you connect using an i.LINK cable (DV connecting cable)**

With digital-to-digital connection, video and audio signals are transmitted in digital format for high-quality editing.

## Step 2: Setting the VCR to operate with the A/V connecting cable

To edit using the VCR, send the control signal by infrared rays to the remote sensor on the VCR.
When you connect using an A/V connecting cable, follow the procedure below, steps **(1)** to **(4)**, to send the control signal correctly.

### (1) Set the IR SETUP code

① Set the POWER switch to VCR on your camcorder.
② Turn the power of the connected VCR on, then set the input selector to LINE.
When you connect a video camera recorder, set its power switch to VCR/VTR.
③ Press MENU to display the menu.
④ Turn the SEL/PUSH EXEC dial to select ETC, then press the dial.
⑤ Turn the SEL/PUSH EXEC dial to select EDIT SET, then press the dial.
⑥ Turn the SEL/PUSH EXEC dial to select CONTROL, then press the dial.
⑦ Turn the SEL/PUSH EXEC dial to select IR, then press the dial.
⑧ Turn the SEL/PUSH EXEC dial to select IR SETUP, then press the dial.
⑨ Turn the SEL/PUSH EXEC dial to select the IR SETUP code of your VCR, then press the dial.
Check the code in “About the IR SETUP code.” (p. 70)

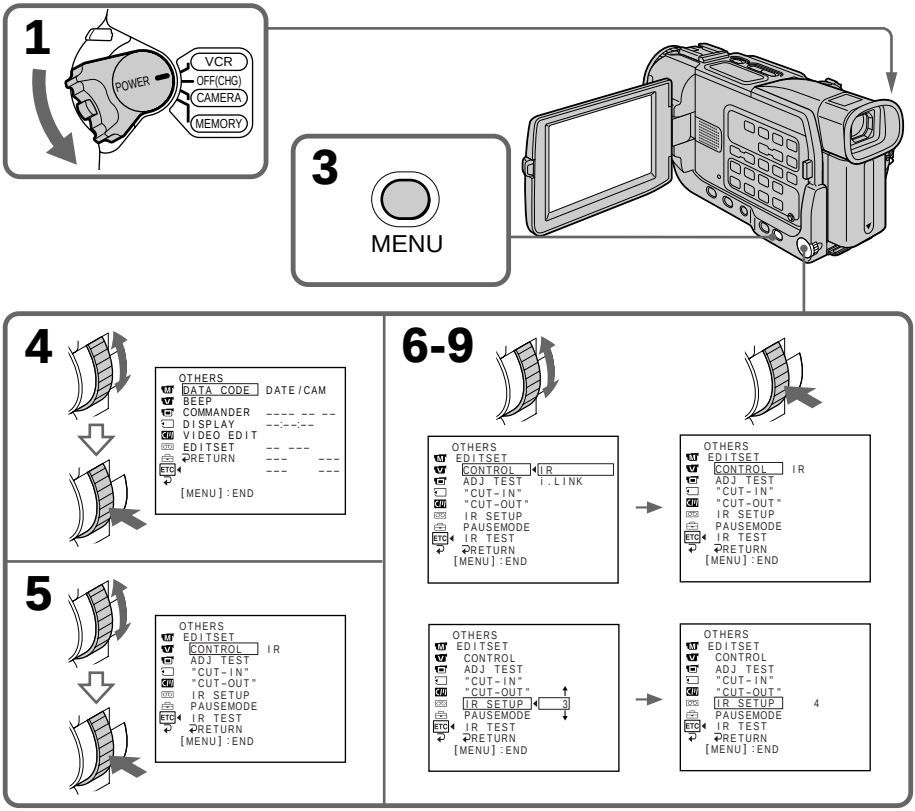

### About the IR SETUP code

The IR SETUP code is stored in the memory of your camcorder. Be sure to set the correct code depending on your VCR. The default setting is Code number 3.

| Brand | IR SETUP code |
|---|---|
| Sony | 1, 2, 3, 4, 5, 6 |
| Admiral (M. Wards) | 89 |
| Aiwa | 80 |
| Audio Dynamic | 21, 35 |
| Bell&Howell (M. Wards) | 36 |
| Brocsonic | 70, 82 |
| Canon | 77, 78, 97 |
| Citizen | 47 |
| Craig | 73, 47 |
| Curtis Mathis | 8, 80, 77 |
| Daewoo | 26, 40, 77 |
| DBX | 21, 33, 35 |
| Dimensia | 8 |
| Emerson | 26, 82, 59, 48, 70, 81 |
| Fisher | 36, 45, 37, 44 |
| Funai | 80 |
| General Electric | 87, 8, 77, 32*, 94* |
| Goldstar | 47 |
| Hitachi | 78, 8, 42 |
| Instant Replay | 77, 78 |
| JC Penny | 77, 42, 8, 36, 21, 33, 35 |
| JVC | 21, 12, 13, 14, 33, 35 |
| Kenwood | 21, 33, 47, 35 |
| LXI (Sears) | 80, 47, 42, 44, 45, 36, 37 |
| Magnavox | 83, 78, 77 |
| Marantz | 21, 33, 35 |
| Marta | 47 |
| Memorex | 77, 37 |
| Minolta | 42, 8 |
| Mitsubishi / MGA | 28, 22, 23, 24 |

| Brand | IR SETUP code |
|---|---|
| Multitech | 23, 80, 32 |
| NEC | 21, 33, 35 |
| Olympic | 77, 78 |
| Panasonic | 16, 17, 78, 77, 96 |
| Pentax | 42,8 |
| Philco | 78, 77 |
| Philips | 83, 78, 77 |
| Pioneer | 78 |
| Quasar | 78, 77, 16, 17 |
| RCA / PROSCAN | 8, 42, 16, 77, 83, 7, 40, 41, 78*, 101 |
| Realistic | 77, 36 |
| Sansui | 21 |
| Singer | 73 |
| Samsung | 94, 41, 32, 32*, 94*, 24* |
| Sanyo | 36, 37 |
| Scott | 40, 41, 32, 37, 28, 22, 23, 24 |
| Sharp | 89, 88 |
| Shintom | 73 |
| Signature 2000 (M. Wards) | 80, 89 |
| Sylvania | 83, 78, 77, 80 |
| Symphonic | 80 |
| Tashiro | 47 |
| Tatung | 21, 33, 35 |
| Teac | 21, 33, 80, 35 |
| Technics | 77, 78 |
| Toshiba | 40, 7 |
| Wards | 89, 88, 37, 95, 47 |
| Yamaha | 36, 21, 33, 35 |
| Zenith | 95 |

* TV / VCR component

### Note on IR SETUP code

Digital program editing is not possible if the VCR does not support IR SETUP codes.

## (2) Setting the modes to cancel recording pause on the VCR

① Turn the SEL / PUSH EXEC dial to select PAUSEMODE, then press the dial.

② Turn the SEL / PUSH EXEC dial to select the mode to cancel recording pause on the VCR, then press the dial.

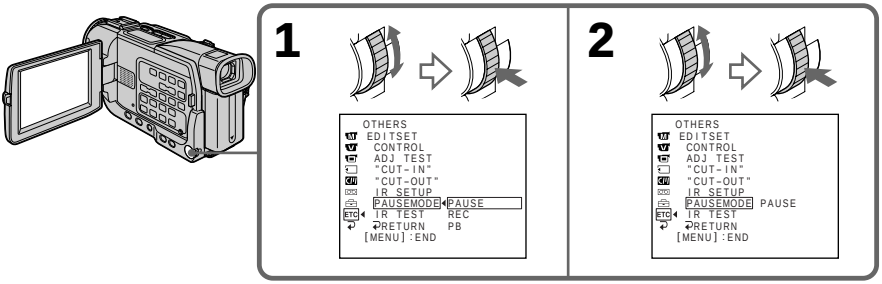


**Buttons for canceling recording pause on the VCR**

The buttons vary depending on your VCR. To cancel recording pause:
– Select PAUSE if the button to cancel recording pause is ❚❚.
– Select REC if the button to cancel recording pause is ●.
– Select PB if the button to cancel recording pause is ►.

## (3) Setting your camcorder and the VCR to face each other

Locate the infrared rays emitter of your camcorder and face it towards the remote sensor of the VCR.
Set the devices about 30 cm (12 in.) apart, and remove any obstacles between the devices.

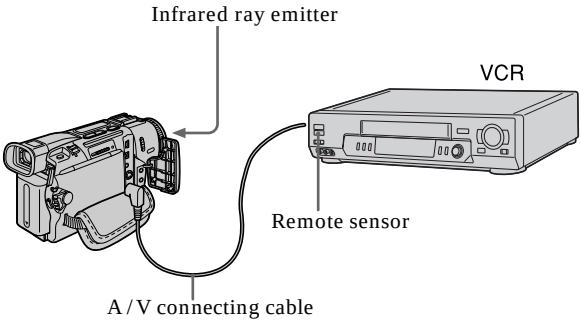

## (4) Confirming VCR operation

① Insert a recordable tape into the VCR, then set to recording pause.
② Turn the SEL / PUSH EXEC dial to select IR TEST, then press the dial.
③ Turn the SEL / PUSH EXEC dial to select EXECUTE, then press the dial.
If the VCR starts recording, the setting is correct.
When finished, the indicator changes to COMPLETE.

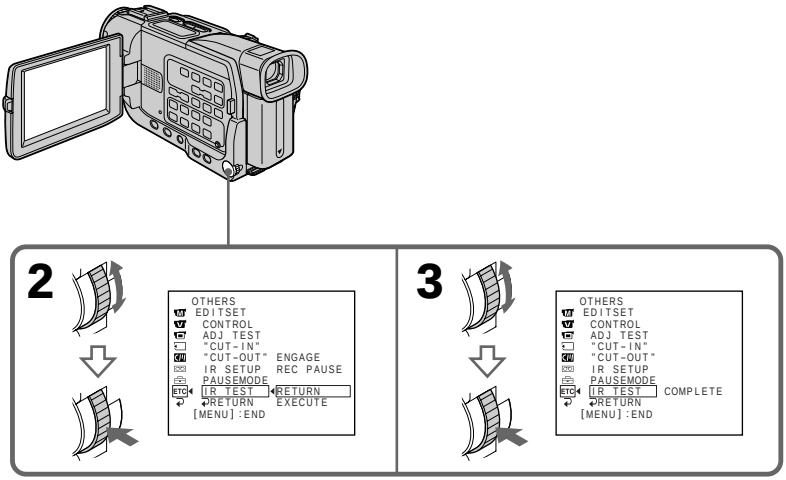


**When the VCR does not operate correctly**

- After checking the code in "About the IR SETUP code," set the IR SETUP or the PAUSEMODE again.
- Place your camcorder at least 30 cm (12 in.) away from the VCR.
- Refer to the operating instructions of your VCR.

## Step 2: Setting the VCR to operate with the i.LINK cable (DV connecting cable)

When you connect using an i.LINK cable (DV connecting cable) (optional), follow the procedure below.

**(1)** Set the POWER switch to VCR on your camcorder .
**(2)** Turn the power of the connected VCR on, then set the input selector to DV input.
When you connect a digital video camera recorder, set its power switch to VCR / VTR.
**(3)** Press MENU to display the menu.
**(4)** Turn the SEL / PUSH EXEC dial to select ETC, then press the dial.
**(5)** Turn the SEL / PUSH EXEC dial to select EDIT SET, then press the dial.
**(6)** Turn the SEL / PUSH EXEC dial to select CONTROL, then press the dial.
**(7)** Turn the SEL / PUSH EXEC dial to select i.LINK, then press the dial.

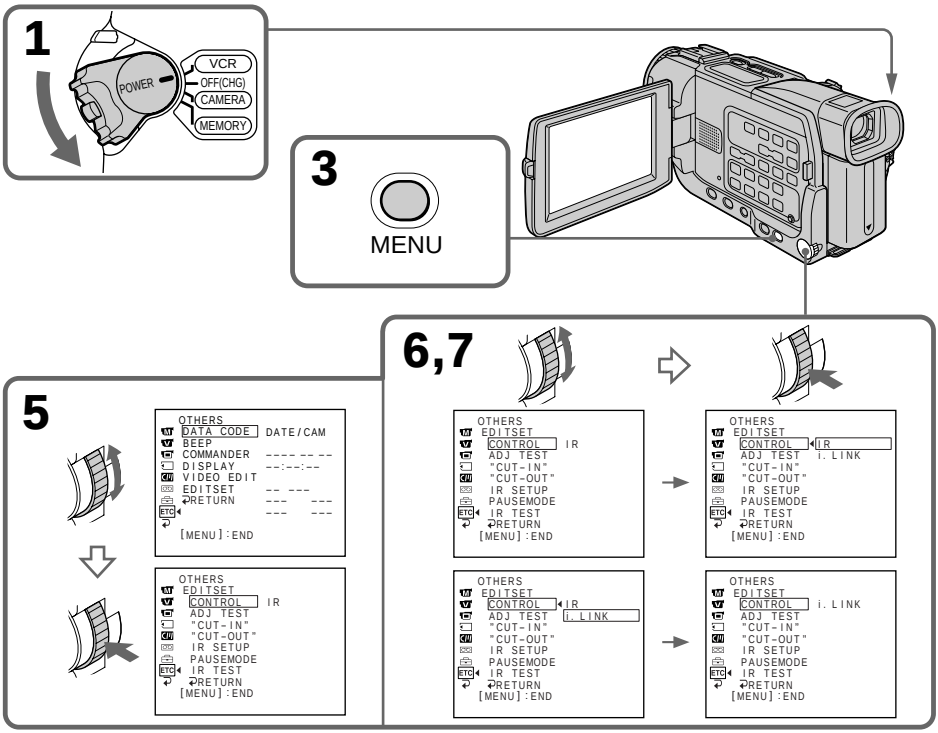


## Step 3: Adjusting the synchronicity of the VCR

You can adjust the synchronicity of your camcorder and the VCR. Have a pen and paper ready for notes. Before operation, eject the cassette from your camcorder.

**(1)** Set the POWER switch to VCR on your camcorder.
**(2)** Insert a blank tape (or a tape you want to record over) into the VCR, then set to recording pause.
When you select i.LINK in CONTROL, you do not need to set to recording pause.

**(3)** Turn the SEL / PUSH EXEC dial to select ADJ TEST, then press the dial.

**(4)** Turn the SEL / PUSH EXEC dial to select EXECUTE, then press the dial.
IN and OUT are recorded on an image for 5 times each to calculate the numerical values for adjusting the synchronicity.
The EXECUTING indicator flashes on the screen.
When finished, the indicator changes to COMPLETE.

**(5)** Rewind the tape in the VCR, then start slow playback.
Take a note of the opening numerical value for each IN and the closing numerical value for each OUT.

**(6)** Calculate the average of all the opening numerical values for each IN, and the average of all the closing numerical values for each OUT.

**(7)** Turn the SEL / PUSH EXEC dial to select “CUT-IN”, then press the dial.

**(8)** Turn the SEL / PUSH EXEC dial to select the average numerical value of IN, then press the dial.
The calculated start position for recording is set.

**(9)** Turn the SEL / PUSH EXEC dial to select “CUT-OUT”, then press the dial.

**(10)** Turn the SEL / PUSH EXEC dial to select the average numerical value of OUT, then press the dial.
The calculated stop position for recording is set.

**(11)** Turn the SEL / PUSH EXEC dial to select ↩ RETURN, then press the dial.

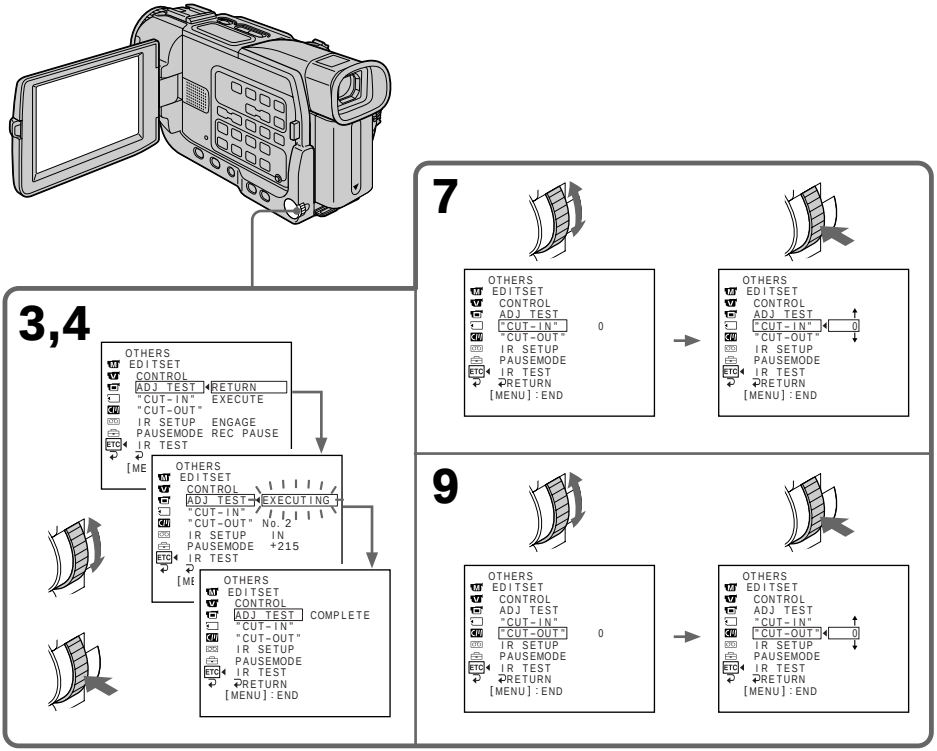

**Notes**

- When you complete step 3, the image to adjust the syncronicity is recorded for about 50 seconds.
- If you start recording from the very beginning of the tape, the first few seconds of the tape may not record properly. Be sure to allow about 10 seconds of lead before starting the recording.

## Operation 1: Making the program

**(1)** Insert the tape for playback into your camcorder, and insert a tape for recording into the VCR.
**(2)** Press MENU to display the menu.
**(3)** Turn the SEL / PUSH EXEC dial to select ETC, then press the dial.
**(4)** Turn the SEL / PUSH EXEC dial to select VIDEO EDIT, then press the dial.
**(5)** Search for the beginning of the first scene you want to insert using the video operation buttons, then pause playback.
**(6)** Press the SEL / PUSH EXEC dial.
The IN point of the first program is set, and the top part of the program mark changes to light blue.
**(7)** Search for the end of the first scene you want to insert using the video operation buttons, then pause playback.
**(8)** Press the SEL / PUSH EXEC dial.
The OUT point of the first program is set, then the bottom part of the program mark changes to light blue.
**(9)** Repeat steps 5 to 8, then set the program.
When the program is set, the program mark changes to light blue.
You can set a maximum of 20 programs.

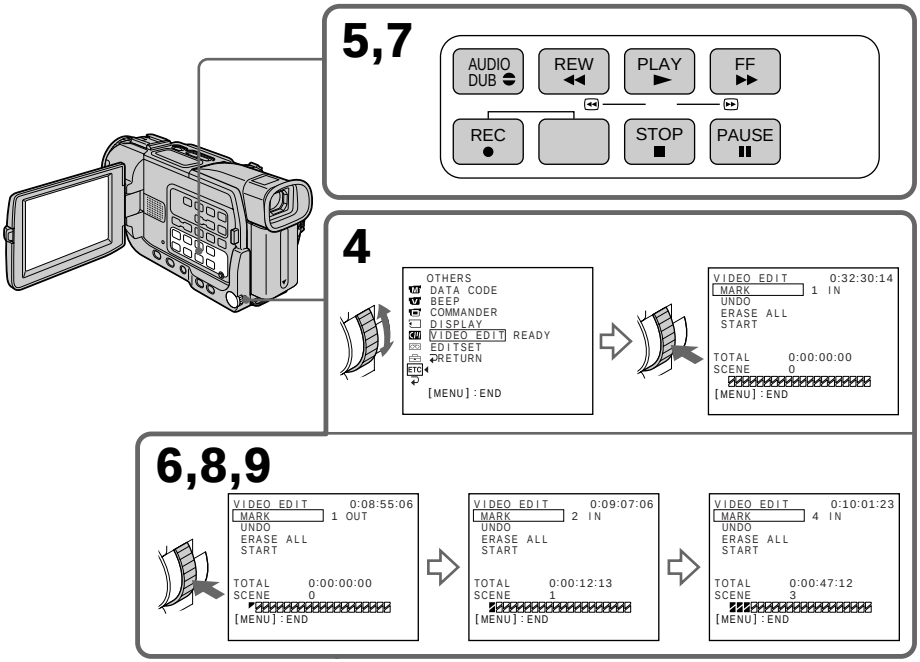

## Erasing the program you have set

Erase OUT first and then IN from the last set program.

**(1)** Turn the SEL/PUSH EXEC dial to select UNDO, then press the dial.

**(2)** Turn the SEL/PUSH EXEC dial to select EXECUTE, then press the dial.
The last set program mark flashes, then the setting is canceled.

### To cancel erasing

Select RETURN in step 2.

## Erasing all programs

**(1)** Select VIDEO EDIT in the menu settings. Turn the SEL/PUSH EXEC dial to select ERASE ALL, then press the dial.

**(2)** Turn the SEL/PUSH EXEC dial to select EXECUTE, then press the dial.
All the program marks flash, then the settings are cancelled.

### To cancel erasing all programs

Select RETURN in step 2.

### To cancel a program you have set

Press MENU.
The program is stored in memory until the tape is ejected.

---

### Note

You cannot operate recording during Digital program editing.

### On a blank portion of the tape

You cannot set IN or OUT on a blank portion of the tape.

### If there is a blank portion between IN and OUT on the tape

The total time code may not be displayed correctly.

## Operation 2: Performing Digital program editing (Dubbing a tape)

Make sure that your camcorder and VCR are connected, and that the VCR is set to recording pause. This procedure is not necessary when you use an i.LINK cable (DV connecting cable).
When you use a digital video camera recorder, set its power switch to VCR / VTR.

**(1)** Select VIDEO EDIT. Turn the SEL / PUSH EXEC dial to select START, then press the dial.

**(2)** Turn the SEL / PUSH EXEC dial to select EXECUTE, then press the dial.
Search for the beginning of the first program, then start dubbing.
The program mark flashes.
The SEARCH indicator appears during a search, and the EDIT indicator appears during editing on the screen.
The program mark changes to light blue after dubbing is complete.
When dubbing ends, your camcorder and the VCR automatically stop.

### To stop dubbing during editing

Press ■ on your camcorder.

### To quit the Digital program editing function

Your camcorder stops when dubbing is complete. Then the display returns to VIDEO EDIT in the menu settings.
Press MENU to quit the Digital program editing function.

---

### You cannot record on the VCR when:

– The tape has run out.
– The write-protect tab on the cassette is set to lock.
– The IR SETUP code is not correct. (when IR is selected.)
– The button to cancel recording pause is not correct. (when IR is selected.)

### NOT READY appears on the LCD screen when:

– The program to operate Digital program editing has not yet been made.
– i.LINK is selected but an i.LINK cable (DV connecting cable) is not connected.
– The power of the connected VCR is not turned on. (when you set i.LINK.)

# Using with analog video unit and personal computer – Signal convert function

You can capture images and sound from an analog video unit connected to your computer which has the i.LINK (DV) jack to your camcorder.

**Before operation**
Set DISPLAY to LCD in the menu settings. (The default setting is LCD.)

**(1)** Set the POWER switch to VCR.
**(2)** Set A / V → DV OUT in [V] to ON in the menu settings (p. 98).
**(3)** Start playback on the analog video unit.
**(4)** Start capturing procedures on your computer. The operation procedures depend on your computer and the software which you use.
For details on how to capture images, refer to the instruction manual of computer and software.



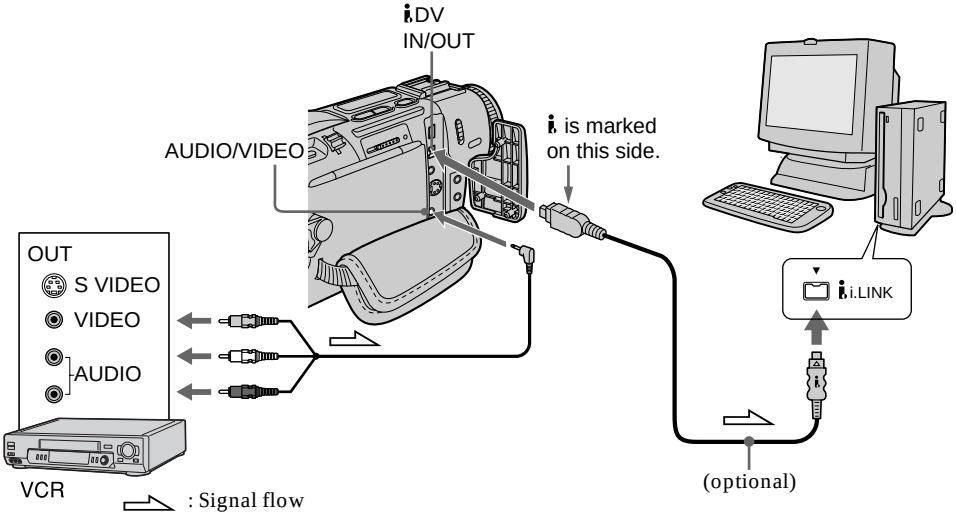


**After capturing images and sound**
Stop capturing procedures on your computer , and stop the playback on the analog video unit.

**Notes**
- You need to install software which can exchange video signals.
- Depending on the condition of the analog video signals, the computer may not be able to output the images correctly when you convert analog video signals into digital video signals via your camcorder. Depending on the analog video unit, the image may contain noise or incorrect colors.
- You cannot record or capture the video output via your camcorder when the video tapes include copyright protection signals such as ID-2 system.

# Recording video or TV programs

## Using the A/V connecting cable

You can record a tape from another VCR or a TV program from a TV that has video/audio outputs. Use your camcorder as a recorder.

**Before operation**

Set DISPLAY to LCD in the menu settings. (The default setting is LCD.)

**(1)** Insert a blank tape (or a tape you want to record over) into your camcorder. If you are recording a tape from the VCR, insert a recorded tape into the VCR.
**(2)** Set the POWER switch to VCR on your camcorder.
**(3)** Press ● REC and the button on its right simultaneously on your camcorder, then immediately press ❚❚ on your camcorder.
**(4)** Press ► on the VCR to start playback if you record a tape from a VCR. Select a TV program if you record from a TV. The picture from a TV or VCR appears on the screen.
**(5)** Press ❚❚ on your camcorder at the scene where you want to start recording from.

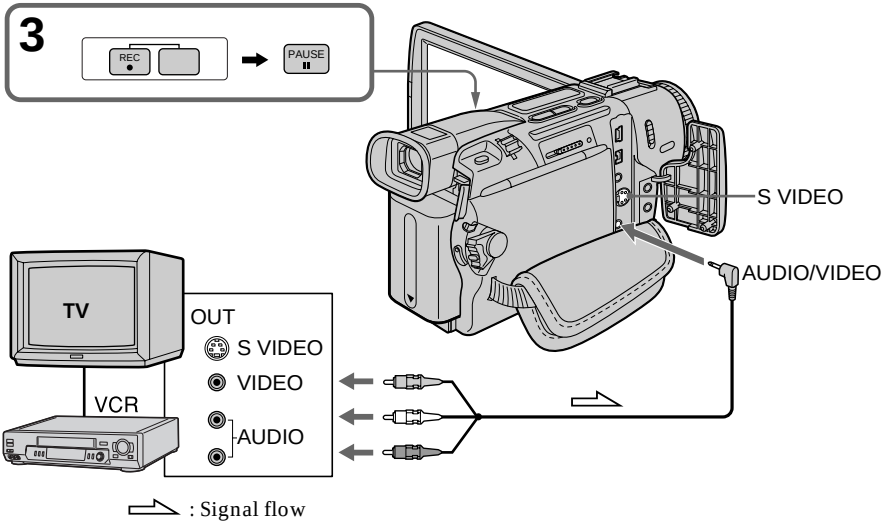


## When you have finished dubbing a tape

Press ■ on both your camcorder and the VCR.

---

**If your VCR is a monaural type**

Connect the yellow plug of the A/V connecting cable to the video output jack and the white or the red plug to the audio output jack on the VCR or the TV. When the white plug is connected, the left channel audio is output, and the red plug is connected, the right channel audio is output.

### If your TV or VCR has an S video jack

Connect using an S video cable (optional) to obtain high-quality pictures.
With this connection, you do not need to connect the yellow (video) plug of the A / V connecting cable.
Connect an S video cable (optional) to the S (S1) video jacks of both your camcorder and the VCR.
This connection produces higher quality DV format pictures.

## Using the i.LINK cable (DV connecting cable)

Simply connect the i.LINK cable (DV connecting cable) (optional) to i DV IN / OUT and to DV OUT of the DV products. With digital-to-digital connection, video and audio signals are transmitted in digital form for high-quality editing.

### Before operation

Set DISPLAY to LCD in the menu settings. (The default setting is LCD.)

**(1)** Insert a blank tape (or a tape you want to record over) into your camcorder, and insert the recorded tape into the VCR.
**(2)** Set the POWER switch to VCR on your comcorder.
**(3)** Press ● REC and the button on its right simultaneously on your camcorder, then immediately press ❚❚ on your camcorder.
**(4)** Press ► on the VCR to start playback. The picture to be recorded appears on the screen.
**(5)** Press ❚❚ on your camcorder at the scene where you want to start recording from.

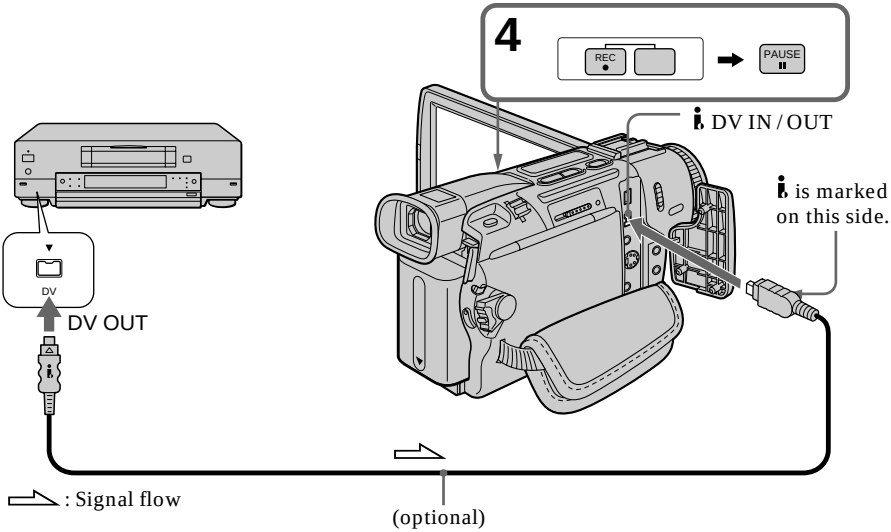


## When you have finished dubbing a tape

Press ■ on your camcorder, and then press the stop button on the VCR.

**You can connect one VCR only using the i.LINK cable (DV connecting cable)**

**When you dub a picture in digital form**
The color of the display may be uneven. However, this does not affect the dubbed picture.

**If you record playback pause picture with the i DV IN/OUT jack**
The recorded picture becomes rough. And when you play back the picture using your camcorder, the picture may jitter.

**Before recording**
Make sure if the DV IN indicator appears on the screen. The DV IN indicator may appear on both equipment.

# Inserting a scene from a VCR – Insert editing

You can insert a new scene from a VCR onto your originally recorded tape by specifying the insert start and end points. Use the Remote Commander for this operation. Connections are the same as on page 80 or 81.
Insert a cassette containing the desired scene to insert into the VCR.

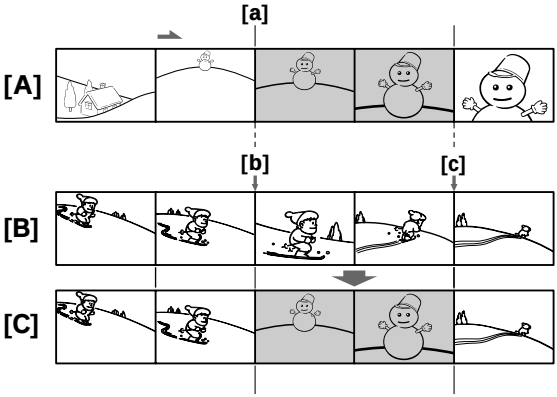


**[A]**: A tape that contains the scene to be superimposed
**[B]**: A tape before editing
**[C]**: A tape after editing

**(1)** Set the POWER switch to VCR on your camcorder.
**(2)** On the connected VCR, locate just before the insert start point **[a]**, then press ❚❚ to set the VCR to the playback pause mode.
**(3)** On your camcorder, locate the insert end point **[c]** by pressing ◀◀ or ▶▶. Then press ❚❚ to set it to the playback pause mode.
**(4)** Press ZERO SET MEMORY on the Remote Commander. The ZERO SET MEMORY indicator flashes and the end point of the insert is stored in memory. The tape counter shows "0:00:00."
**(5)** On your camcorder, locate the insert start point **[b]** by pressing ◀◀, then press ● REC and the button on its right simultaneously.
**(6)** First press ❚❚ on the VCR, and after a few seconds press ❚❚ on your camcorder to start inserting the new scene.
Inserting automatically stops near the zero point on the tape counter. Your camcorder automatically returns to the recording pause mode.

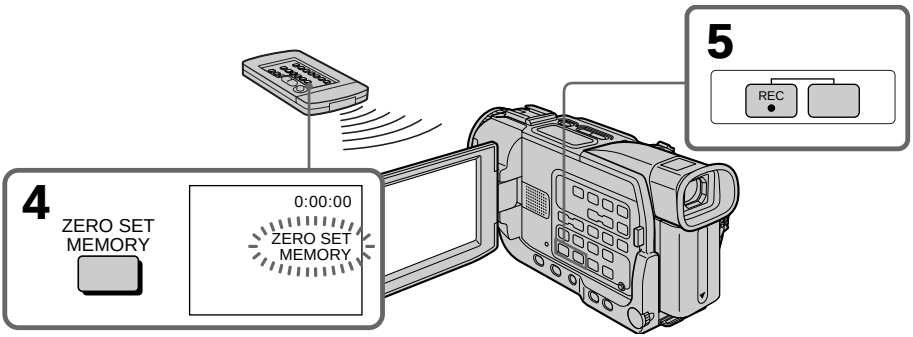

### To change the insert end point

Press ZERO SET MEMORY again after step 5 to erase the ZERO SET MEMORY indicator and begin from step 3.

---

**Note**

The picture and sound recorded on the portion between the insert start and end points will be erased when you insert the new scene.

**If you insert scenes on the tape recorded with other camcorder (including other DCR-TRV15/TRV17)**

The picture and sound may be distorted. We recommend that you insert scenes on a tape recorded with your camcorder.

**When the inserted picture is played back**

The picture and sound may be distorted at the end of the inserted portion. This is not a malfunction.
The picture and sound at the start point and the end point may be distorted in the LP mode.

**To insert a scene without setting the insert end point**

Skip steps 3 and 4. Press ■ when you want to stop inserting.

# Audio dubbing

You can record an audio sound to add to the original sound on a tape by connecting audio equipment or a microphone. If you connect the audio equipment, you can add sound to your recorded tape by specifying starting and ending points. The original sound will not be erased.
Select one of the following connections to add an audio sound.

## Connecting the microphone with the MIC jack

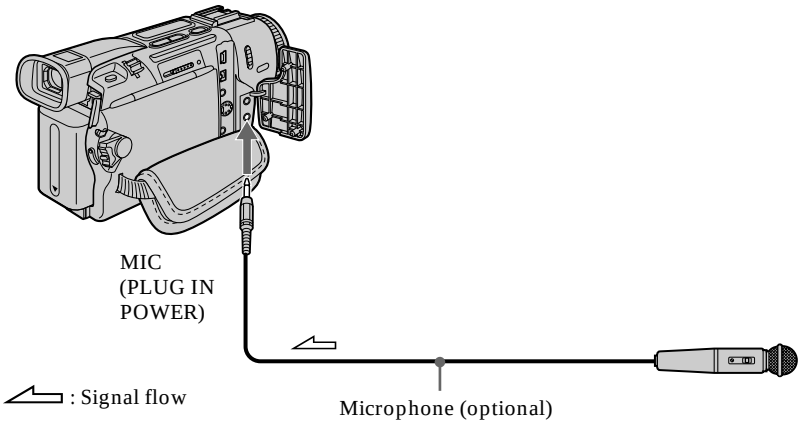


You can check the recorded picture and sound by connecting your camcorder to a TV with the A/V connecting cable.
The recorded sound is not output from a speaker. Check the sound by using the TV or headphones.

## Connecting the microphone with the intelligent accessory shoe

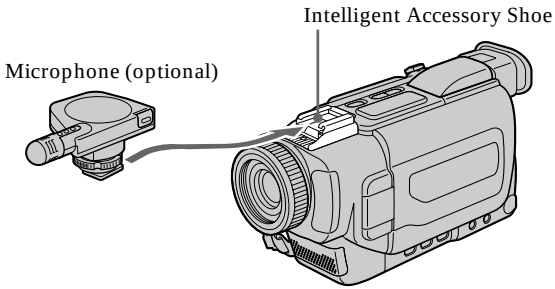

## Dubbing with the AUDIO/VIDEO jack

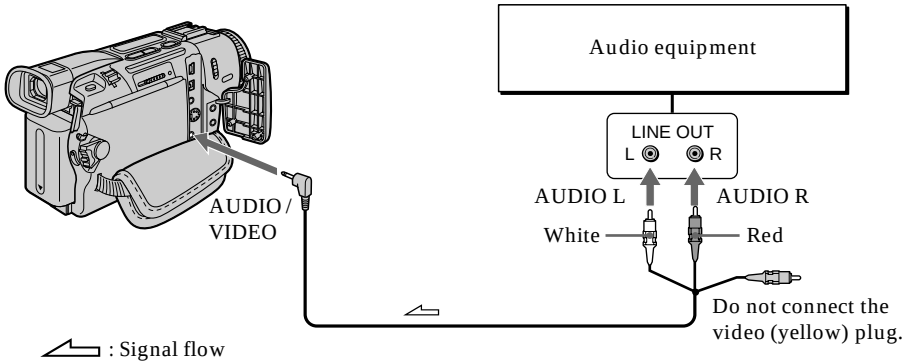


## Dubbing with the built-in microphone

No connection is necessary.

**Note**

When dubbing with the AUDIO / VIDEO jack or the built-in microphone, pictures are not output through S VIDEO jack or the AUDIO / VIDEO jack. Check the recorded picture on the screen. You can check the recorded sound by using headphones.

**If you make all the connections**

The audio input to be recorded will take precedence over others in the following order.

- MIC (PLUG IN POWER) jack
- Intelligent accessory shoe
- AUDIO / VIDEO jack
- Built-in microphone

## Adding an audio sound on a recorded tape

**(1)** Insert the recorded tape into your camcorder.
**(2)** Set the POWER switch to VCR on your camcorder.
**(3)** Locate the recording start point by pressing ► on the Remote Commander. Then press ❚❚ at the point where you want to start recording to set your camcorder to the playback pause mode.
**(4)** Press AUDIO DUB. The green ⊖❚❚ indicator appears on the screen.
**(5)** Press ❚❚ on your camcorder and start playing back the audio you want to record at the same time.
The new sound is recorded in stereo 2 (ST2) during playback.
**(6)** Press ■ on your camcorder at the point where you want to stop recording.

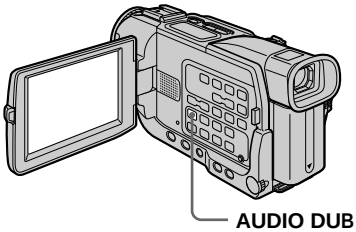


## Monitoring the new recorded sound

### To play back the sound

Adjust the balance between the original sound (ST1) and the new sound (ST2) by selecting AUDIO MIX in [V] in the menu settings (p. 98).

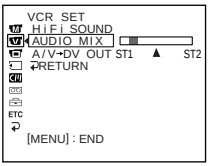


Five minutes after when you disconnect the power source or remove the battery pack, the setting of AUDIO MIX returns to the original sound (ST1) only. The default setting is original sound only.

**Notes**

- New sound cannot be recorded on a tape already recorded in the 16-bit mode (32 kHz, 44.1 kHz or 48 kHz) (p. 101).
- New sound cannot be recorded on a tape already recorded in the LP mode (p. 101).
- You cannot add audio with the i DV IN / OUT jack.
- You cannot add audio on the blank portion of the tape.

**If an i.LINK cable (DV connecting cable) (optional) is connected to your camcorder**

You cannot add a sound to a recorded tape.

**To add new sound more precisely**

Press ZERO SET MEMORY on the Remote Commander at the point where you want to stop recording later in the playback mode.
Carry out steps 3 to 5. Recording automatically stops at the point where ZERO SET MEMORY was pressed.

**We recommend that you add new sound on a tape recorded with your camcorder**

If you add new sound on a tape recorded with another camcorder (including other DCR-TRV15 / TRV17), the sound quality may become worse.

**If you set the write-protect tab of the tape to lock**

You cannot record on a tape. Slide the write-protect tab to release the write protection.

# Superimposing a title

CM only

If you use a tape with cassette memory, you can superimpose the title. When you play back the tape, the title is displayed for five seconds from the point where you superimposed it.

You can select one of eight preset titles and two custom titles (p. 92). You can also select the color, size and position of titles.

**(1)** In CAMERA or VCR mode, press MENU to display the menu.
**(2)** Turn the SEL / PUSH EXEC dial to select CM in the menu settings, then press the dial.
**(3)** Turn the SEL / PUSH EXEC dial to select TITLE then press the dial.
**(4)** Turn the SEL / PUSH EXEC dial to select 🗀, then press the dial.
**(5)** Turn the SEL / PUSH EXEC dial to select the desired title, then press the dial. The title flashes.
**(6)** Change the color, size, or position, if necessary.
① Turn the SEL / PUSH EXEC dial to select the COLOR, SIZE or POSITION, then press the dial. The item appears.
② Turn the SEL / PUSH EXEC dial to select the desired item, then press the dial.
③ Repeat steps ① and ② until the title is laid out as desired.
**(7)** Press the SEL / PUSH EXEC dial again to complete the setting.
In the recording, playback or playback pause mode:
The "TITLE SAVE" indicator appears on the screen for five seconds and the title is set.
In the standby mode:
The "TITLE" indicator appears. And when you press START / STOP to start recording, "TITLE SAVE" appears on the screen for five seconds and the title is set.

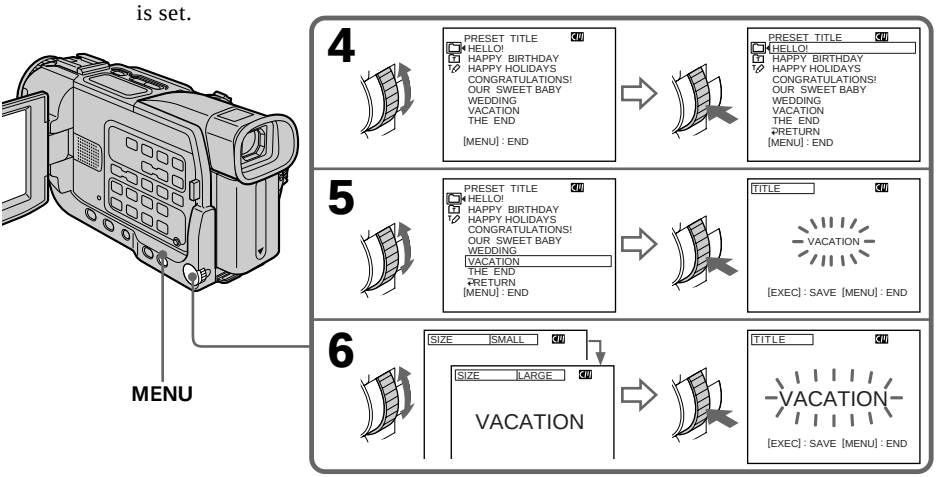


Editing

### If you set the write-protect tab to lock
You cannot superimpose or erase the title. Slide the write-protect tab to release the write protection.

### To use the custom title
If you want to use the custom title, select [T] in step 4.

### If the tape has a blank portion
You cannot superimpose a title on the portion.

### If the tape has a blank portion in the middle of the recorded parts
The title may not be displayed correctly.

### The titles superimposed with your camcorder
- They are displayed by only the DV Mini DV format video equipment with index titler function.
- The point you superimposed the title may be detected as an index signal when searching a recording with other video equipment.

### If the tape has too many index signals
You may not be able to superimpose a title because the memory is full. In this case, delete data you do not need.

### Not to display titles
Set TITLE DSPL to OFF in the menu settings (p. 100).

### Title setting
- The title color changes as follows:
  WHITE ⟷ YELLOW ⟷ VIOLET ⟷ RED ⟷ CYAN ⟷ GREEN ⟷ BLUE
- The title size changes as follows:
  SMALL ⟷ LARGE
  You cannot input 13 characters or more for a LARGE size.
- If you select the title size “SMALL,” you have 9 choices for the title position.
  If you select the title size “LARGE,” you have 8 choices for the title position.

### One cassette can have up to about 20 titles, if one title consists of five characters
However, if the cassette memory is full with date, photo and cassette label data, one cassette can have only up to about 11 titles with five characters each.
Cassette memory capacity is as follows:
- 6 date data (maximum)
- 12 photo data (maximum)
- 1 cassette label (maximum)

### If the “ FULL” mark appears
The cassette memory is full. If you erase the title in the cassette, you can label it.

## Erasing a title

**(1)** Set the POWER switch to CAMERA or VCR, and then press MENU to display the menu.
**(2)** Turn the SEL / PUSH EXEC dial to select in the menu setting, then press the dial.
**(3)** Turn the SEL / PUSH EXEC dial to select TITLEERASE, then press the dial. Title erase display appears.
**(4)** Turn the SEL / PUSH EXEC dial to select the title you want to erase, then press the dial.
"ERASE OK ?" indicator appears.
**(5)** Make sure the title is the one you want to erase, and turn the SEL / PUSH EXEC dial to select OK, then press the dial. OK changes to EXECUTE.
**(6)** Turn the SEL / PUSH EXEC dial to select EXECUTE, then press the dial. ERASING indicator flashes, then COMPLETE indicator appears.

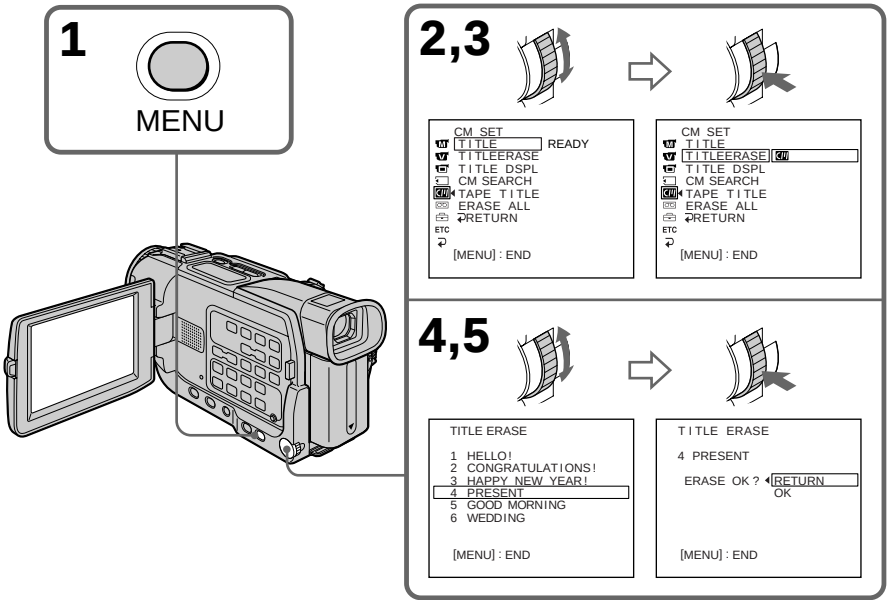


### To cancel erasing a title

Select RETURN in step 6.

# Making your own titles

CM only

You can make up to two titles and store them in cassette memory. Each title can have up to 20 characters.

**(1)** Press MENU to display the menu in CAMERA or VCR mode.
**(2)** Turn the SEL / PUSH EXEC dial to select CM, then press the dial.
**(3)** Turn the SEL / PUSH EXEC dial to select TITLE, then press the dial.
**(4)** Turn the SEL / PUSH EXEC dial to select , then press the dial.
**(5)** Turn the SEL / PUSH EXEC dial to select the first line (CUSTOM1 SET) or second line (CUSTOM2 SET), then press the dial.
**(6)** Turn the SEL / PUSH EXEC dial to select the column of the desired character, then press the dial.
**(7)** Turn the SEL / PUSH EXEC dial to select the desired character, then press the dial.
**(8)** Repeat steps 6 and 7 until you have selected all characters and completed the title.
**(9)** To finish making your own titles, turn the SEL / PUSH EXEC dial to select [SET], then press the dial.
**(10)** Press MENU to make the title menu disappear.

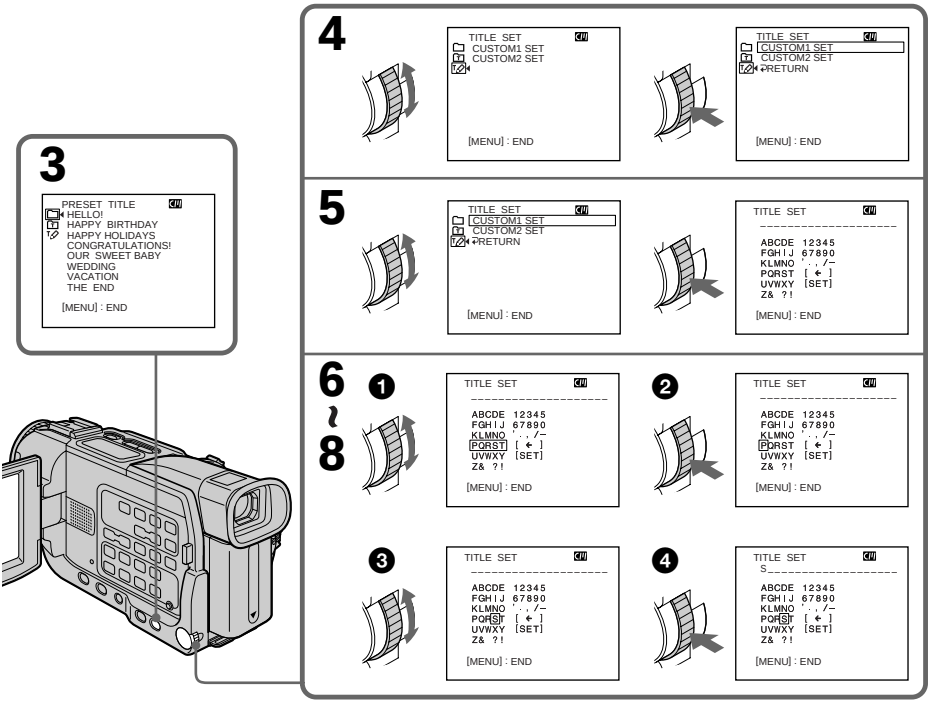

## To change a title you have stored

In step 5, select CUSTOM1 SET or CUSTOM2 SET, depending on which title you want to change, then press the SEL / PUSH EXEC dial. Turn the SEL / PUSH EXEC dial to select [←], then press the dial to delete the title. The last character is erased. Enter the new title as desired.

---

**If you take five minutes or longer to enter characters in the standby mode while a cassette is in your camcorder**

The power automatically goes off. The characters you have entered remain stored in memory. Set the POWER switch to OFF (CHG) once and then to CAMERA again, then proceed from step 1.
We recommend setting the POWER switch to VCR or removing the cassette so that your camcorder does not automatically turn off while you are entering title characters.

**To delete the title**

Select [←]. The last character is erased.

**To enter a space**

Select [Z&  ?!], then select the blank part.

# Labeling a cassette

CM only

If you use a tape with cassette memory, you can label a cassette. The label can consist of up to 10 characters and is stored in cassette memory. When you insert the labelled cassette and turn the power on, the label is displayed for about five seconds.

**(1)** Insert the cassette you want to label.
**(2)** Set the POWER switch to VCR.
**(3)** Press MENU to display the menu.
**(4)** Turn the SEL / PUSH EXEC dial to select CM, then press the dial.
**(5)** Turn the SEL / PUSH EXEC dial to select TAPE TITLE, then press the dial. Tape title display appears.
**(6)** Turn the SEL / PUSH EXEC dial to select the column of the desired character, then press the dial.
**(7)** Turn the SEL / PUSH EXEC dial to select the desired character, then press the dial.
**(8)** Repeat steps 6 and 7 until you finish the label.
**(9)** Turn the SEL / PUSH EXEC dial to select [SET], then press the dial.
The label is stored in memory.

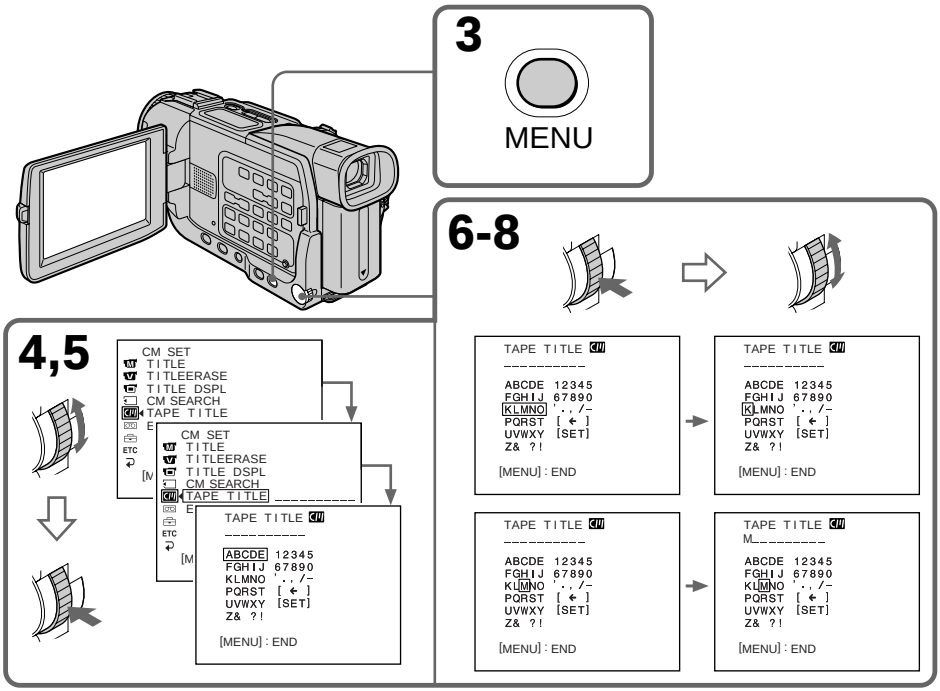

## To erase a character

In step 6 turn the SEL / PUSH EXEC dial to select [←], then press the dial. The last character is erased.

## To change the label you have made

Insert the cassette to change the label, and operate in the same way to make a new label.

---

**If you set the write-protect tab of the tape to lock**

You cannot label the tape. Slide the write-protect tab to release the write protection.

**If the mark appears in step 5**

The cassette memory is full. If you erase the title in the cassette, you can label it.

**If you have superimposed titles in the cassette**

When the label is displayed, up to four titles also appear.

**When the "-----" indicator has fewer than 10 spaces**

The cassette memory is full.
The "-----" indicates the number of characters you can select for the label.

**To enter a space**

Select [Z&  ?!], then select the blank part.

# Changing the menu settings

To change the mode settings in the menu settings, select the menu items with the SEL / PUSH EXEC dial. The factory settings can partially changed. First, select the icon, then the menu item and then the mode.

**(1)** In CAMERA, MEMORY (DCR-TRV17 only) or VCR mode, press MENU.
**(2)** Turn the SEL / PUSH EXEC dial to select the desired icon, then press the dial to set.
**(3)** Turn the SEL / PUSH EXEC dial to select the desired item, then press the dial to set.
**(4)** Turn the SEL / PUSH EXEC dial to select the desired mode, then press the dial to set.
**(5)** If you want to change other items, select ↩ RETURN and press the dial, then repeat steps 2 to 4.

For details, see “Selecting the mode setting of each item” (p. 97).

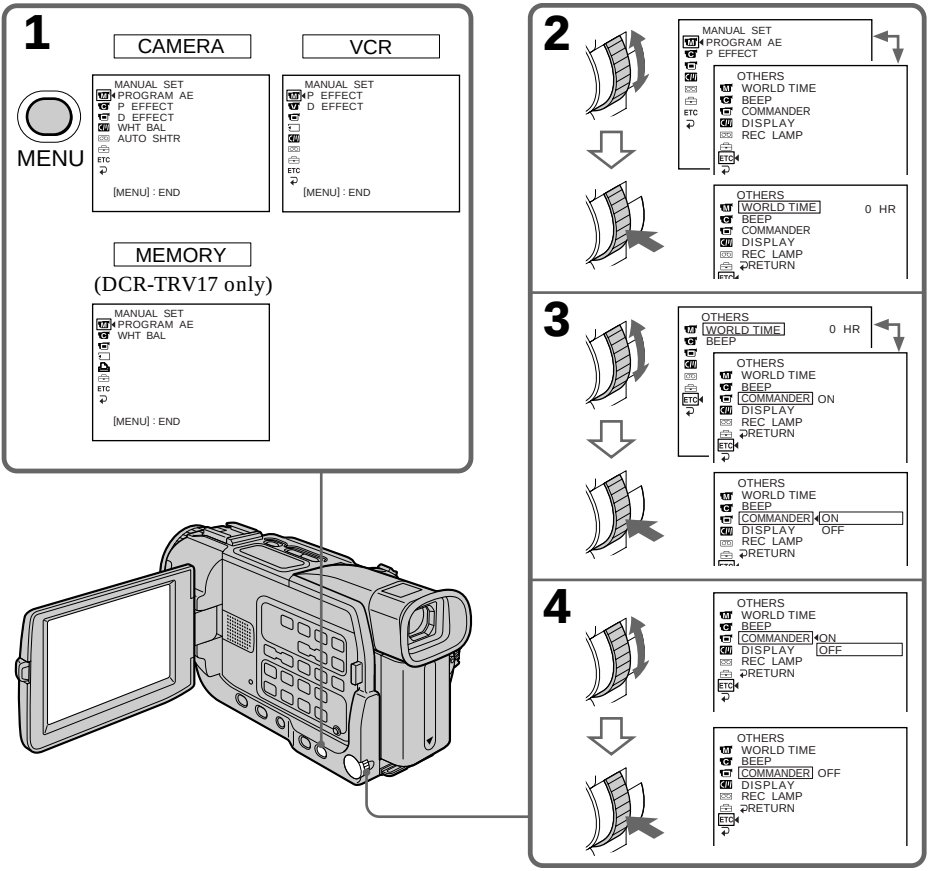

### To make the menu display disappear

Press MENU.

**Menu items are displayed as the following icons:**

- MANUAL SET
- CAMERA SET
- VCR SET
- LCD / VF SET
- MEMORY SET (DCR-TRV17 only)
- PRINT SET (DCR-TRV17 only)
- CM SET
- TAPE SET
- SETUP MENU
- OTHERS

## Selecting the mode setting of each item

● is the default setting.

Menu items differ depending on the position of the POWER switch. The screen shows only the items you can operate at the moment.

| Icon/item | Mode | Meaning | POWER switch |
|---|---|---|---|
| PROGRAM AE | — | To suit your specific shooting requirement (p. 49) | CAMERA MEMORY |
| P EFFECT | — | To add special effects like those in films or on the TV to images (p. 45, 57). | VCR CAMERA |
| D EFFECT | — | To add special effects using the various digital functions (p. 46, 58) | VCR CAMERA |
| WHT BAL | — | To adjust the white balance (p. 41). | CAMERA MEMORY |
| AUTO SHTR | ● ON | To automatically activate the electronic shutter when shooting in bright conditions. | CAMERA |
| | OFF | Not to automatically activate the electronic shutter even when shooting in bright conditions. | |
| SELFTIMER | ● OFF | Not to use the self-timer function | CAMERA MEMORY |
| | ON | To use the self-timer function | |
| D ZOOM | ● OFF | To deactivate the digital zoom. Up to 10× zoom is carried out. | CAMERA |
| | 20× | To activate the digital zoom. More than 10× to 20× zoom is performed digitally (p. 24). | |
| | 120× | To activate the digital zoom. More than 10× to 120× zoom is performed digitally (p. 24). | |
| 16:9WIDE | ● OFF | — | CAMERA |
| | ON | To record a 16:9 wide picture (p. 42). | |
| STEADYSHOT | ● ON | To compensate for camera-shake. | CAMERA |
| | OFF | To cancel the SteadyShot function. Natural pictures are produced when shooting a stationary object with a tripod. | |
| N.S. LIGHT | ● ON | To use the NightShot Light function (p. 27). | CAMERA MEMORY |
| | OFF | To cancel the NightShot Light function. | |

(continued on the following page)

| Icon/item | Mode | Meaning | POWER switch |
|---|---|---|---|
| FRAME REC | ● OFF | To deactivate Cut recording function. | CAMERA |
| | ON | To activate Cut recording function (p. 56). | |
| INT. REC | ON | To activate Interval recording function (p. 54). | CAMERA |
| | ● OFF | To deactivate Interval recording function. | |
| | SET | To set waiting time and recording time for Interval recording function (p. 54). | |
| HiFi SOUND | ● STEREO | To play back a stereo tape or dual sound track tape with main and sub sound (p. 159). | VCR |
| | 1 | To play back a stereo tape with the left sound or a dual sound tape with main sound. | |
| | 2 | To play back a stereo tape with the right sound or a dual sound track tape with sub sound. | |
| AUDIO MIX | — | To adjust the balance between the stereo 1 and stereo 2 (p. 87). ST1 ▲ ST2 | VCR |
| A/V→DV OUT | ● OFF | To output digital images and sound in analog format using your camcorder. | VCR |
| | ON | To output analog images and sound in digital format using your camcorder (p. 79). | |
| LCD BRIGHT | — | To adjust the brightness on the LCD screen with the SEL / PUSH EXEC dial. To darken ↔ To lighten | VCR CAMERA MEMORY |
| LCD B. L. | ● BRT NORMAL | To set the brightness on the LCD screen normal. | VCR CAMERA MEMORY |
| | BRIGHT | To brighten the LCD screen. | |
| LCD COLOR | — | To adjust the color on the LCD screen, turn and press the SEL / PUSH EXEC dial. To get low-intensity ↔ To get high-intensity | VCR CAMERA MEMORY |
| VF B.L. | ● BRT NORMAL | To set the brightness on the viewfinder screen to normal. | VCR CAMERA MEMORY |
| | BRIGHT | To brighten the viewfinder screen. | |

**Notes on the SteadyShot function**

- The SteadyShot function will not correct excessive camera-shake.
- Attachment of a conversion lens (optional) may influence the SteadyShot function.

**Notes on LCD B.L. and VF B.L.**

- When you select “BRIGHT”, battery life is reduced by about 10 percent during recording.
- When you use power sources other than the battery pack, “BRIGHT” is automatically selected.

| Icon/item | Mode | Meaning | POWER switch |
|---|---|---|---|
| * STILL SET | | | |
| PIC MODE | ● SINGLE | Not to record continuously. | MEMORY |
| | MULTI SCRN | To record nine still picutures continuously (p. 114). | |
| QUALITY | ● FINE | To record still pictures in the fine image quality mode (p. 106). | VCR MEMORY |
| | STANDARD | To record still pictures in the standard image quality mode (p. 106). | |
| MOVIE SET | | | |
| IMAGE SIZE | ● 320 × 240 | To record moving pictures in 320 × 240 size (p. 108) | VCR MEMORY |
| | 160 × 112 | To record moving pictures in 160 × 112 size (p. 108) | |
| REMAIN | ● AUTO | To display the remaining capacity of the "Memory Stick" in the following cases:<br>• For 5 seconds after setting the POWER switch to MEMORY<br>• For 5 seconds after inserting a "Memory Stick" into your camcorder in MEMORY or VCR mode<br>• When the capacity of the "Memory Stick" is less than 1 minute in MEMORY mode<br>• For 5 seconds after completing a moving picture recording | VCR MEMORY |
| | ON | To always display the remaining capacity of the "Memory Stick" | |
| PRINT MARK | ON | To write a print mark on the recorded still images you want to print out later (p. 146). | VCR MEMORY |
| | ● OFF | To cancel print marks on still pictures. | |
| PROTECT | ON | To protect selected still pictures against accidental erasure (p. 143). | VCR MEMORY |
| | ● OFF | Not to protect still pictures. | |
| SLIDE SHOW | — | To play back images in a continuous loop (p. 142). | MEMORY |
| DELETE ALL | — | To delete all the unprotected images (p. 144). | MEMORY |

* DCR-TRV17 only

(continued on the following page)

| Icon/item | Mode | Meaning | POWER switch |
|---|---|---|---|
| * FORMAT | ● RETURN | To cancel formatting. | MEMORY |
| | OK | To format an inserted "Memory Stick."<br>1. Select FORMAT with the SEL / PUSH EXEC dial, then press the dial.<br>2. Turn the SEL / PUSH EXEC dial to select OK, then press the dial.<br>3. After "EXECUTE" appears, press the SEL / PUSH EXEC dial. "FORMATTING" flashes during formatting. "COMPLETE" appears when formatting is finished. | |
| PHOTO SAVE | — | To duplicate mini DV still pictures on "Memory Stick"(p. 127). | VCR |
| * 9PIC PRINT | ● RETURN | To cancel prints of split screen | MEMORY |
| | SAME | To make prints of same split screen (p. 148) | |
| | MULTI | To make prints of different split screen (p. 148) | |
| | MARKED | To make prints of images with print marks in recording order (p. 148) | |
| DATE/TIME | ● OFF | To make prints without the recording date and time | MEMORY |
| | DATE | To make prints with the recording date (p. 148) | |
| | DAY&TIME | To make prints with the recording date and time (p. 148) | |
| TITLE | — | To superimpose a title or make your own title. (p. 89, 92) | VCR<br>CAMERA |
| TITLEERASE | — | To erase the title you have superimposed (p. 91). | VCR<br>CAMERA |
| TITLE DSPL | ● ON | To display the title you have superimposed. | VCR |
| | OFF | Not to display the title. | |
| CM SEARCH | ● ON | To search using cassette memory (p. 61). | VCR |
| | OFF | To search without using cassette memory. | |
| TAPE TITLE | — | To label a cassette (p. 94). | VCR<br>CAMERA |
| ERASE ALL | — | To erase all the data in cassette memory. | VCR<br>CAMERA |

* DCR-TRV17 only

**Notes on formatting (DCR-TRV17 only)**

- Supplied or optional "Memory Stick"s have been formatted at factory. Formatting with this camcorder is not required.
- Do not turn the POWER switch or press any button while the display shows "FORMATTING."
- You cannot format the "Memory Stick" if the write-protect tab on the "Memory Stick" is set to LOCK.
- Format again if the message "" appears.

**Formatting erases all information on the "Memory Stick" (DCR-TRV17 only)**

Check the contents of the "Memory Stick" before formatting.

- Formatting erases sample images on the "Memory Stick."
- Formatting erases the protected image data on the "Memory Stick."

**Note on PRINT SET (DCR-TRV17 only)**

9PIC PRINT and DATE / TIME are displayed only when an external printer (optional) is connected to the intelligent accessory shoe.

| Icon/item | Mode | Meaning | POWER switch |
|---|---|---|---|
| REC MODE | ● SP | To record in the SP (Standard Play) mode. | VCR CAMERA |
| | LP | To increase the recording time to 1.5 times the SP mode. | |
| AUDIO MODE | ● 12BIT | To record in the 12-bit mode (two stereo sounds). | VCR CAMERA |
| | 16BIT | To record in the 16-bit mode (the one stereo sound with high quality). | |
| REMAIN | ● AUTO | To display the remaining tape bar:<br>• for about 8 seconds after your camcorder is turned on and calculates the remaining amount of tape.<br>• for about 8 seconds after a cassette is inserted and your camcorder calculates the remaining amount of tape.<br>• for about 8 seconds after ► is pressed in VCR mode.<br>• for about 8 seconds after DISPLAY is pressed to display the screen indicators.<br>• for the period of tape rewinding, forwarding or picture search in the VCR mode. | VCR CAMERA |
| | ON | To always display the remaining tape indicator. | |
| CLOCK SET | — | To set the date or time (p. 18). | CAMERA MEMORY |
| AUTO TV ON | ● OFF | — | VCR CAMERA MEMORY |
| | ON | To automatically turn on a Sony TV when using the laser link function (P. 37). | |
| TV INPUT | ● VIDEO1<br>VIDEO2<br>VIDEO3 | To switch the video input on a Sony TV when using the laser function (P. 37). | VCR CAMERA MEMORY |
| | OFF | — | |
| LTR SIZE | ● NORMAL | To display selected menu items in normal size. | VCR CAMERA MEMORY |
| | 2× | To display selected menu items at twice the normal size. | |
| DEMO MODE | ● ON | To make the demonstration appear. | CAMERA |
| | OFF | To cancel the demonstration mode. | |

**Notes on the LP mode**
- When you record a tape in the LP mode on your camcorder, we recommend playing the tape on your camcorder. When you play back the tape on other camcorders or VCRs, noise may occur in pictures or sound.
- When you record in the LP mode, we recommend using a Sony Excellence / Master cassette so that you can get the most out of your camcorder.
- You cannot make audio dubbing on a tape recorded in the LP mode. Use the SP mode for the tape to be audio dubbed.
- When you record in the SP and LP modes on one tape or you record some scenes in the LP mode, the playback picture may be distorted or the time code may not be written properly between scenes.

**Notes on AUDIO MODE**
- You cannot dub audio sound on a tape recorded in the 16-bit mode.
- When playing back a tape recorded in the 16-bit mode, you cannot adjust the balance in AUDIO MIX.

**Notes on DEMO MODE**
- You cannot select DEMO MODE when a cassette is inserted in your camcorder.
- DEMO MODE is set to STBY (Standby) at the factory and the demonstration starts about 10 minutes after you have set the POWER switch to CAMERA without a cassette inserted. Note that you cannot select STBY of DEMO MODE in the menu settings.
- When NIGHTSHOT is set to ON, the “NIGHTSHOT” indicator appears on the LCD screen or in the viewfinder and you cannot select DEMO MODE in the menu settings.

(continued on following page)

| Icon/item | Mode | Meaning | POWER switch |
|---|---|---|---|
| ETC DATA CODE | ● DATE/CAM | To display date, time and various settings during playback (p. 32, 130). | VCR MEMORY |
| | DATE | To display date and time during playback (p. 32, 130, 132). | |
| WORLD TIME | — | To set the clock to the local time. Turn the SEL/PUSH EXEC dial to set a time difference. The clock changes by the time difference you set here. If you set the time difference to 0, the clock returns to the originally set time. | CAMERA MEMORY |
| BEEP | ● MELODY | To output the melody when you start/stop recording or when an unusual condition occurs on your camcorder. | VCR CAMERA MEMORY |
| | NORMAL | To output the beep instead of the melody. | |
| | OFF | To cancel the melody and beep sound. | |
| COMMANDER | ● ON | To activate the Remote Commander supplied with your camcorder. | VCR CAMERA MEMORY |
| | OFF | To deactivate the Remote Commander to avoid remote control misoperation caused by other VCR's remote control. | |
| DISPLAY | ● LCD | To show the display on the LCD screen and in the viewfinder. | VCR CAMERA MEMORY |
| | V-OUT/LCD | To show the display on the TV screen, LCD screen and in the viewfinder. | |
| REC LAMP | ● ON | To light up the camera recording lamp at the front of your camcorder. | CAMERA MEMORY |
| | OFF | To turn the camera recording lamp off so that the person is not aware of the recording. | |
| VIDEO EDIT | — | To make program and perform video editing (p. 76). | VCR |
| EDIT SET | — | To adjust and set the synchronicity of your camcorder and a VCR for dubbing in edit set mode (p. 69). | VCR |

**Note**

If you press DISPLAY with DISPLAY set to V-OUT/LCD in the menu settings, the picture from a TV or VCR will not appear on the LCD screen even when your camcorder is connected to outputs on the TV or VCR.

**When recording a close subject**

When REC LAMP is set to ON, the red camera recording lamp on the front of the camcorder may reflect on the subject if it is close. In this case, we recommend you set REC LAMP to OFF.

**In more than five minutes after removing the power source**

The "AUDIO MIX", "COMMANDER", "HiFi SOUND", and "WHT BAL" items are returned to their factory settings.
The other menu items are held in memory even when the battery is removed.

# Using a "Memory Stick" – introduction

## – DCR-TRV17 only

You can record and play back images on a "Memory Stick" supplied with your camcorder. You can easily play back, record or delete images. You can exchange image data with other equipment such as your computer etc. using the USB cable for "Memory Stick" supplied with your camcorder.

## On file format

### Still image (JPEG)

Your camcorder compresses image data in JPEG format (extension .jpg).

### Moving picture (MPEG)

Your camcorder compresses picture data in MPEG format (extension .mpg).

### Typical image data file name

Still image
100-0001: This file name appears on the screen of your camcorder.
Dsc00001.jpg: This file name appears on the display of your personal computer.

Moving picture
MOV00001:This file name appears on the screen of your camcorder.
Mov00001.mpg: This file name appears on the display of your personal computer.

## Using a "Memory Stick"

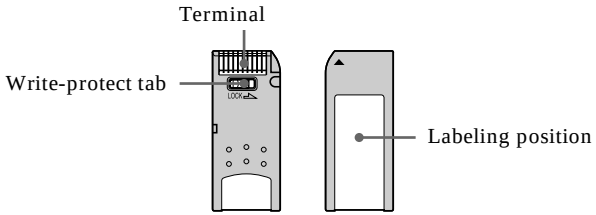


- You cannot record or erase images when the write-protect tab on the "Memory Stick" is set to LOCK.
  The position and shape of the write-protect tab may be different depending on the model.
- We recommend backing up important data.
- Image data may be damaged in the following cases:
  – If you remove the "Memory Stick" or turn the power off while reading or writing.
  – If you use "Memory Stick"s near static electricity or magnetic fields.
- Prevent metallic objects or your finger from coming into contact with the metal parts of the connecting section.
- Stick its label on the labeling position.
- Do not bend, drop or apply strong shock to "Memory Stick"s.
- Do not disassemble or modify "Memory Stick"s.
- Do not let "Memory Stick"s get wet.
- Do not use or keep "Memory Stick"s in locations that are:
  – Extremely hot such as in a car parked in the sun or under the scorching sun.
  – Under direct sunlight.
  – Very humid or subject to corrosive gases.
- When you carry or store a "Memory Stick," put it in its case.

## "Memory Stick"s formatted by a computer

"Memory Stick"s formatted by Windows OS or Macintosh computers do not have a guaranteed compatibility with this camcorder.

### Notes on image data compatibility

- Image data files recorded on "Memory Stick"s by your camcorder conform with the Design rule for Camera File system universal standard established by the JEITA (Japan Electronics and Information Technology Industries Association). You cannot play back on your camcorder still images recorded on other equipment (DCR-TRV890E / TRV900 / TRV900E or DSC-D700 / D770) that does not conform with this universal standard. (These models are not sold in some areas.)
- If you cannot use the "Memory Stick" that is used with other equipment, format it with this camcorder (p. 100). However, formatting erases all information on the "Memory Stick."

---

- "Memory Stick" and MEMORY STICK ™ are trademarks of Sony Corporation.
- Windows and ActiveMovie, DirectShow are either registered trademarks or trademarks of Microsoft Corporation in the United States and / or other countries.
- Macintosh and Mac OS, QuickTime are trademarks of Apple Computer, Inc.
- All other product names mentioned herein may be the trademarks or registered trademarks of their respective companies.
- Furthermore, "™" and "®" are not mentioned in each case in this manual.

## Inserting a "Memory Stick"

Lift up the viewfinder, and insert a "Memory Stick" in the "Memory Stick" slot as far as it can go with the ▲ mark facing up as illustrated.

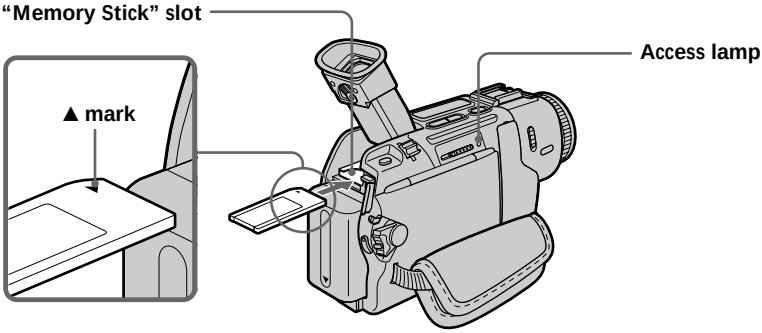


## Ejecting a "Memory Stick"

Slide ◄ MEMORY EJECT in the direction of the arrow.

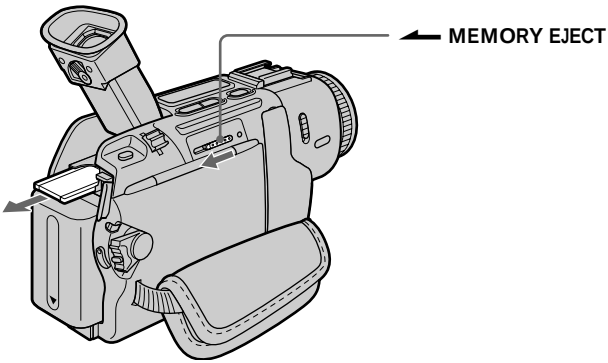


**If you extend the viewfinder to the end**
You cannot insert or eject a "Memory Stick."

**While the access lamp is lit or flashing**
Do not shake or strike your camcorder because your camcorder is reading the data from the "Memory Stick" or recording the data on the "Memory Stick." Do not turn the power off , eject a "Memory Stick" or remove the battery pack. Otherwise, the image data breakdown may occur.

**If "MEMORYSTICK ERROR" is displayed**
The "Memory Stick" may be corrupted. If this occurs, use another "Memory Stick."

## Selecting still image quality mode

You can select image quality mode in still image recording. The default setting is FINE.

**(1)** Set the POWER switch to MEMORY or VCR. Make sure that the LOCK switch is set to the left (unlock) position.
**(2)** Press MENU to display the menu.
**(3)** Turn the SEL / PUSH EXEC dial to select , then press the dial.
**(4)** Turn the SEL / PUSH EXEC dial to select STILL SET, then press the dial.
**(5)** Turn the SEL / PUSH EXEC dial to select QUALITY, then press the dial.
**(6)** Turn the SEL / PUSH EXEC dial to select the desired image quality, then press the dial.

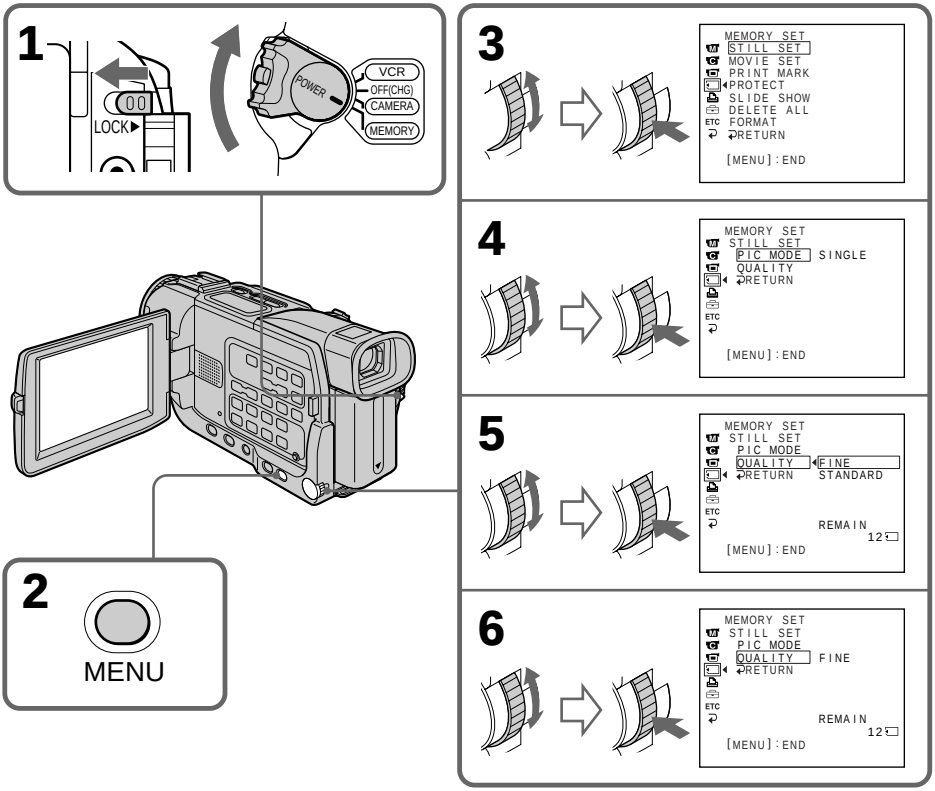

## Image quality settings

| Setting | Meaning |
|---|---|
| FINE (FINE) | Use this mode when you want to record high quality images. The image is compressed to about 1/6. |
| STANDARD (STD) | This is the standard image quality. The image is compressed to about 1/10. |

**Note**

In some cases, changing the image quality mode may not affect the image quality, depending on the types of images you are shooting.

**Differences in image quality mode**

Recorded images are compressed in JPEG format before being stored in memory. The memory capacity allotted to each image varies depending on the selected image quality mode. Details are shown in the table below.

| Image quality mode | Memory capacity |
|---|---|
| FINE | About 100 KB |
| STANDARD | About 60 KB |

**Image quality mode indicator**

The image quality mode indicator is not displayed during playback.

## Selecting the image size

You can select 320 × 240 or 160 × 112 of the moving picture size.
The default setting is 320 × 240.

**(1)** Set the POWER switch to MEMORY. Make sure that the LOCK switch is set to the left (unlock) position.
**(2)** Press MENU to display the menu.
**(3)** Turn the SEL / PUSH EXEC dial to select , then press the dial.
**(4)** Turn the SEL / PUSH EXEC dial to select MOVIE SET (moving picture), then press the dial.
**(5)** Turn the SEL / PUSH EXEC dial to select IMAGESIZE, then press the dial.
**(6)** Turn the SEL / PUSH EXEC dial to select the desired image size, then press the dial.
The indicator changes as follows:

320 ⟷ 160

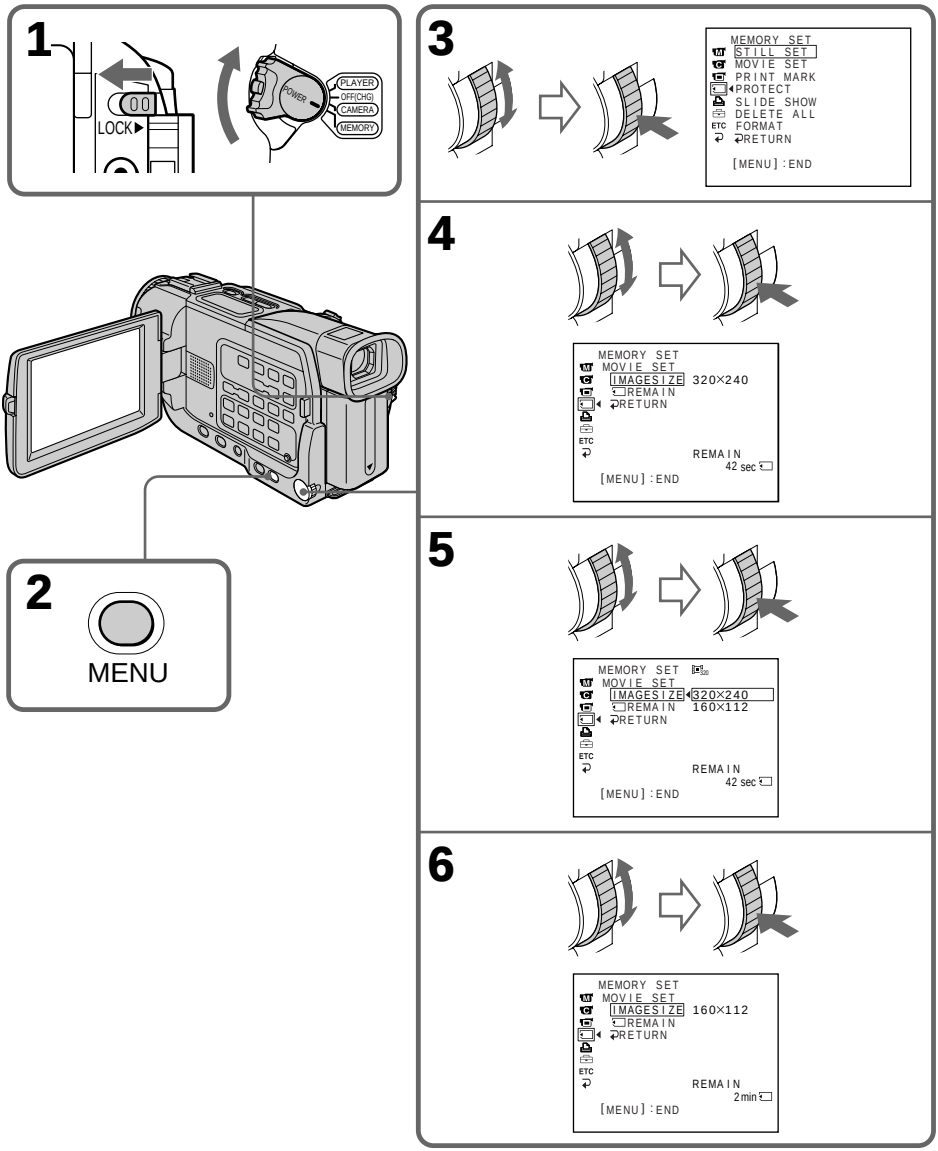


**Image size of still pictures**

Image size is automatically set to 640 × 480.

## Moving picture size settings

| Setting | Meaning | Indicator | |
|---|---|---|---|
| | | Recording | Playback |
| 320 × 240 | Records 320 × 240 moving pictures. | 320 | 320 |
| 160 × 112 | Records 160 × 112 moving pictures. | 160 | 160 |

## Maximum recording time of moving pictures

| Image size | Maximum recording time |
|---|---|
| 320 × 240 | 15 seconds |
| 160 × 112 | 60 seconds |

## Approximate number of still images you can record on a "Memory Stick"

The number of images you can record varies depending on which image quality mode you select and the complexity of the subject.

**4MB type (supplied):**

| | |
|---|---|
| FINE (FINE) | 40 images |
| STANDARD (STD) | 60 images |

**8MB type (optional):**

| | |
|---|---|
| FINE (FINE) | 81 images |
| STANDARD (STD) | 122 images |

**16MB type (optional):**

| | |
|---|---|
| FINE (FINE) | 164 images |
| STANDARD (STD) | 246 images |

**32MB type (optional):**

| | |
|---|---|
| FINE (FINE) | 329 images |
| STANDARD (STD) | 494 images |

**64MB type (optional):**

| | |
|---|---|
| FINE (FINE) | 659 images |
| STANDARD (STD) | 988 images |

**128MB type (optional):**

| | |
|---|---|
| FINE (FINE) | 1319 images |
| STANDARD (STD) | 1978 images |

## Approximate time of moving pictures you can record on a "Memory Stick"

The time of moving pictures you can record varies depending on which image size you select and the complexity of the subject.

**4MB type (supplied):**

| Picture size | 160 × 112 | 320 × 240 |
|---|---|---|
| Recording time | 2 min. 40 sec. | 40 sec. |

**8MB type (optional):**

| Picture size | 160 × 112 | 320 × 240 |
|---|---|---|
| Recording time | 5 min. 20 sec. | 1 min. 20 sec. |

**16MB type (optional):**

| Picture size | 160 × 112 | 320 × 240 |
|---|---|---|
| Recording time | 10 min. 40 sec. | 2 min. 40 sec. |

**32MB type (optional):**

| Picture size | 160 × 112 | 320 × 240 |
|---|---|---|
| Recording time | 21 min. 20 sec. | 5 min. 20 sec. |

**64MB type (optional):**

| Picture size | 160 × 112 | 320 × 240 |
|---|---|---|
| Recording time | 42 min. 40 sec. | 10 min. 40 sec. |

**128MB type (optional):**

| Picture size | 160 × 112 | 320 × 240 |
|---|---|---|
| Recording time | 85 min. 20 sec. | 21 min. 20 sec. |

# Recording still images on “Memory Stick”s – Memory photo recording

## – DCR-TRV17 only

You can record still pictures on “Memory Stick”s.

**Before operation**

Insert a “Memory Stick” into your camcorder.

**(1)** Set the POWER switch to MEMORY. Make sure that the LOCK switch is set to the left (unlock) position.

**(2)** Keep pressing PHOTO lightly until the desired still picture appears. The green ● mark stops flashing, then lights up. The brightness of the picture and focus are adjusted, being targeted for the middle of the picture and are fixed. Recording does not start yet.

**(3)** Press PHOTO deeper. The image displayed on the screen will be recorded on a “Memory Stick.” Recording is complete when the bar scroll indicator disappears.

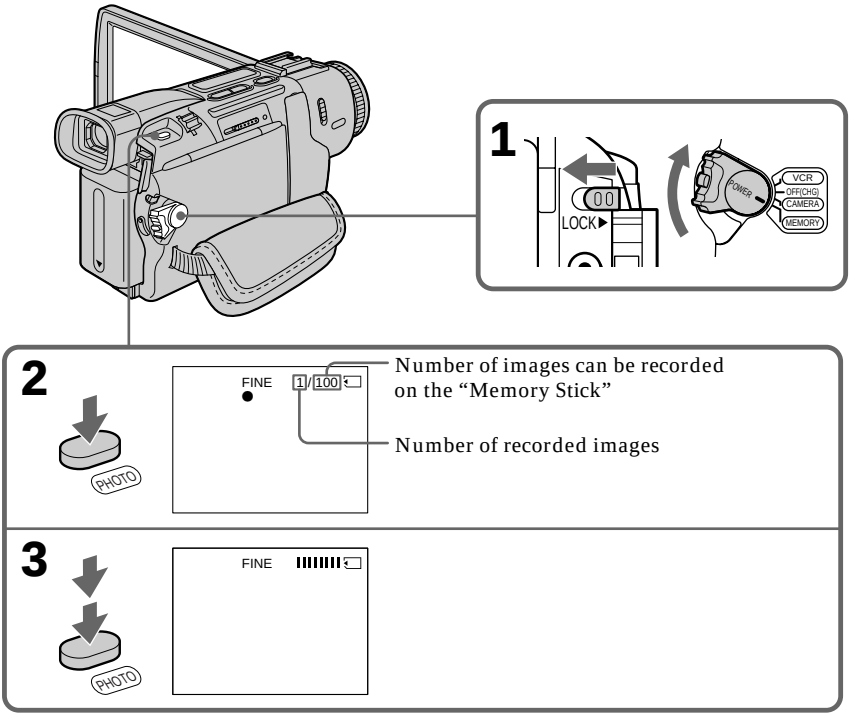

### When the POWER switch is set to MEMORY

The following functions do not work:
– Wide TV mode
– Digital zoom
– SteadyShot function
– Super NightShot
– Fader
– Picture effect
– Digital effect
– Title
– Low lux mode (The indicator flashes.)
– Sports lesson mode (The indicator flashes.)

### While you are recording a still image

You can neither turn off the power nor press PHOTO.

### When you press PHOTO on the Remote Commander

Your camcorder immediately records the image that is on the screen when you press the button.

### Note

When recording still images at step 2 with the PHOTO button pressed lightly, the image momentarily flickers. This is not a malfunction.

## Recording images continuously

You can record still pictures continuously. Select one of the two modes described below before recording.

**Multi screen mode (Recording image size is 640 × 480)**
You can record nine still pictures continuously on a single page.

While pressing down PHOTO, your camcorder continuously record maximum number of still pictures.
When you stop pressing, the recording stops.

**(1)** Set the POWER switch to MEMORY. Make sure that the LOCK switch is set to the left (unlock) position.
**(2)** Press MENU to display the menu.
**(3)** Turn the SEL / PUSH EXEC dial to select ▭, then press the dial.
**(4)** Turn the SEL / PUSH EXEC dial to select STILL SET, then press the dial.
**(5)** Turn the SEL / PUSH EXEC dial to select PIC MODE, then press the dial.
**(6)** Turn the SEL / PUSH EXEC dial to select MULTI SCRN, then press the dial.

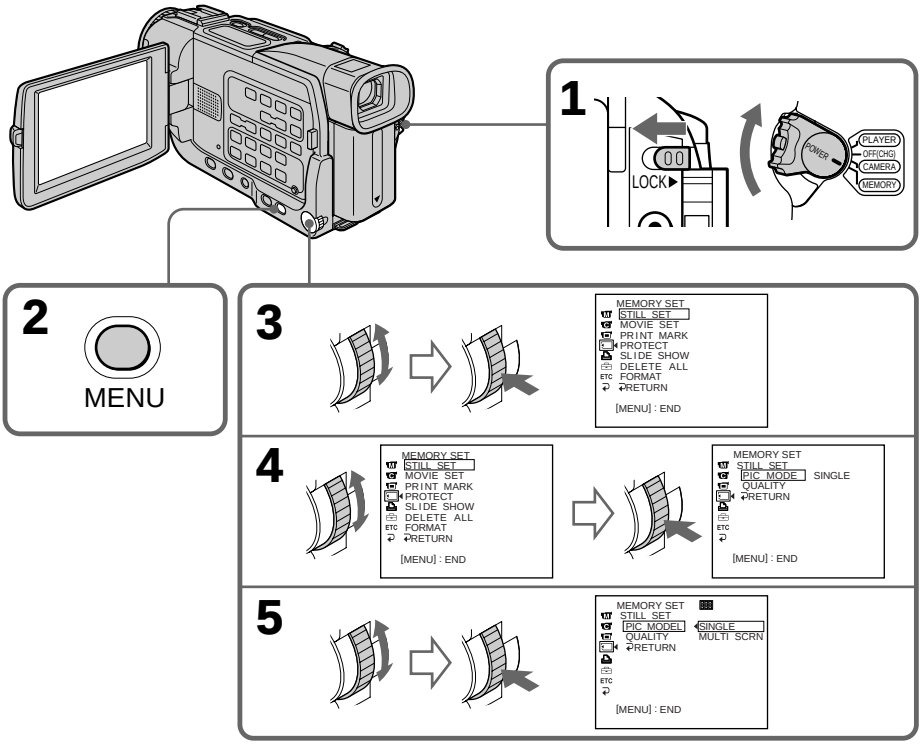


## If the capacity of the "Memory Stick" becomes full

"FULL" appears on the screen, and you cannot record still pictures on this "Memory Stick."

## Continuous shooting settings

| Setting | Meaning (indicator on the screen) |
|---|---|
| SINGLE | Your camcorder shoots one image at a time. (no indicator) |
| MULTI SCRN | Your camcorder shoots nine still images at about 0.5 sec intervals and displays the images on a single page divided into nine boxes. ( ) |

## Self-timer memory photo recording

You can record still images on "Memory Stick"s with the self-timer. You can use the Remote Commander for this operation.

**(1)** Set the POWER switch to MEMORY. Make sure that the LOCK is set to the left (unlock) position.
**(2)** Press MENU to display the menu settings in the standby mode.
**(3)** Turn the SEL/PUSH EXEC dial to select , then press the dial.
**(4)** Turn the SEL/PUSH EXEC dial to select SELFTIMER, then press the dial.
**(5)** Turn the SEL/PUSH EXEC dial to select ON, then press the dial.
**(6)** Press MENU to make the menu settings disappear.
**(7)** Press PHOTO deeper.
Self-timer starts counting down from 10 with a beep sound. In the last two seconds of the countdown, the beep sound gets faster, then recording starts automatically.

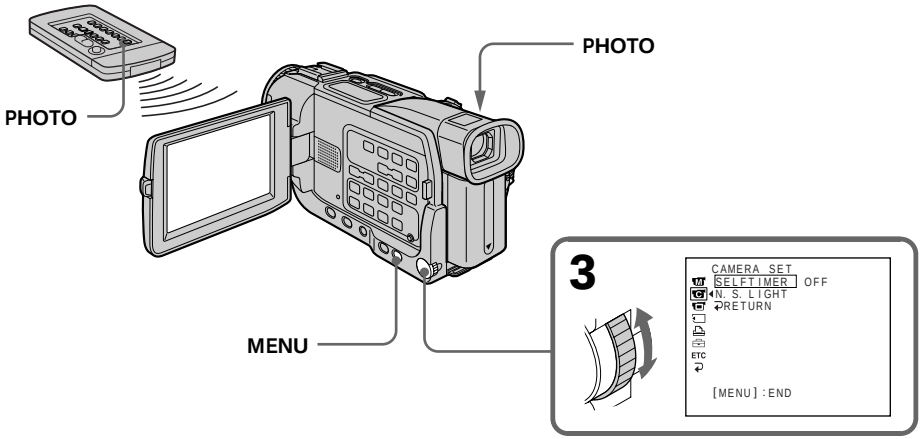


### To cancel self-timer recording

Set SELFTIMER to OFF in the menu settings while your camcorder is in the standby mode. You cannot cancel self-timer recording with Remote Commander.

---

**Note**

The self-timer recording mode is automatically cancelled when:
– Self-timer recording is finished.
– The POWER switch is set to OFF (CHG) or VCR.

**To check the image to be recorded**

You can check the image with pressing PHOTO lightly, then press it deeper to start the self-timer recording.

# Recording an image from a tape as a still image

## – DCR-TRV17 only

Your camcorder can read moving picture data recorded on a tape and record it as a still image on a "Memory Stick".

**Before operation**

- Insert a recorded tape into your camcorder.
- Insert a "Memory Stick" into your camcorder.

**(1)** Set the POWER switch to VCR.
**(2)** Press ►. The picture recorded on the tape is played back.
**(3)** Keep pressing PHOTO lightly until the picture from the tape freezes. "CAPTURE" appears on the screen. Recording does not start yet.
**(4)** Press PHOTO deeper. The image displayed on the screen will be recorded on a "Memory Stick." Recording is complete when the bar scroll indicator disappears.

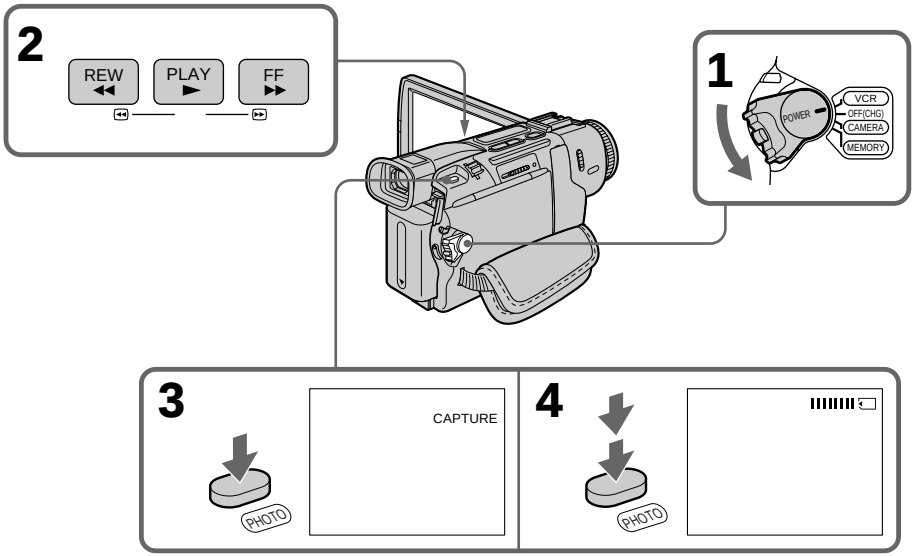


**When the access lamp is lit or flashing**

Never shake or strike the unit. As well do not turn the power off , eject a "Memory Stick" or remove the battery pack. Otherwise, the image data breakdown may occur.

**If "⚠" appears on the screen**

The inserted "Memory Stick" is incompatible with your camcorder because its format does not conform with your camcorder. Check the format of the "Memory Stick."

**If you press PHOTO lightly in the playback mode**

Your camcorder stops momentarily.

**Sound recorded on a tape**
You cannot record the audio from a tape.

**Titles have already recorded on tapes**
You cannot record the titles on "Memory Stick"s. The title does not appear while you are recording a still picture with PHOTO.

**When you press PHOTO on the Remote Commander**
Your camcorder immediately records the image that is on the screen when you press the button.

## Recording a still image from other equipment

**Before operation**
Set DISPLAY to LCD in the menu settings. (The default setting is LCD.)

**(1)** Set the POWER switch to VCR.
**(2)** Play back the recorded tape, or turn the TV on to see the desired program. The image of the other equipment is displayed on the screen.
**(3)** Follow steps 3 and 4 on page 117.

### Using the A/V connecting cable

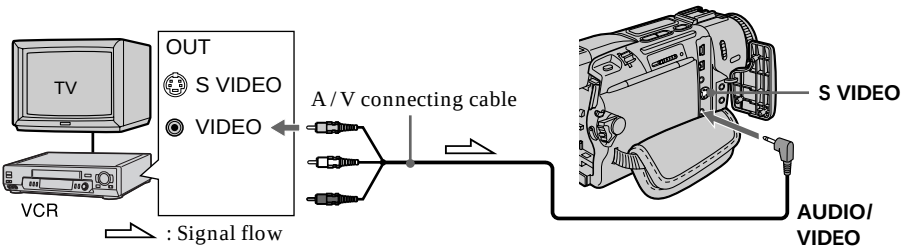


Connect the yellow plug of the A / V connecting cable to the video jack on the VCR or the TV.

**If your TV or VCR has an S video jack**

Connect using an S video cable (optional) to obtain high-quality pictures.
With this connection, you do not need to connect the yellow (video) plug of the A/V connecting cable.
Connect an S video cable (optional) to the S video jacks of both your camcorder and the TV or VCR.
This connection produces higher quality DV format pictures.

## Using the i.LINK cable (DV connecting cable)

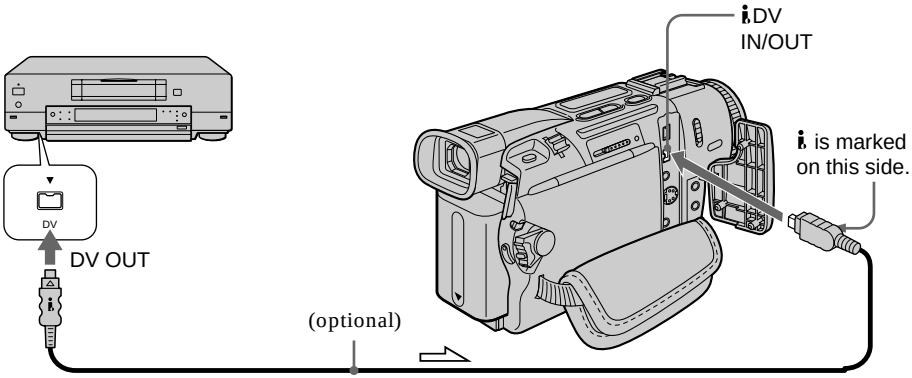


: Signal flow

# Recording moving pictures on “Memory Stick”s – MPEG movie recording

## – DCR-TRV17 only

You can record moving pictures with sound on “Memory Stick”s.

**Before operation**

Insert a “Memory Stick” into your camcorder.

**(1)** Set the POWER switch to MEMORY. Make sure that the LOCK switch is set to the left (unlock) position.

**(2)** Press START/STOP. Your camcorder starts recording. The camera recording lamp located on the front of your camcorder lights up. When IMAGESIZE in the menu settings is set to 160 × 112, the maximum recording time is 60 seconds. However, when IMAGESIZE in the menu settings is set to 320 × 240, the maximum recording time is 15 seconds.

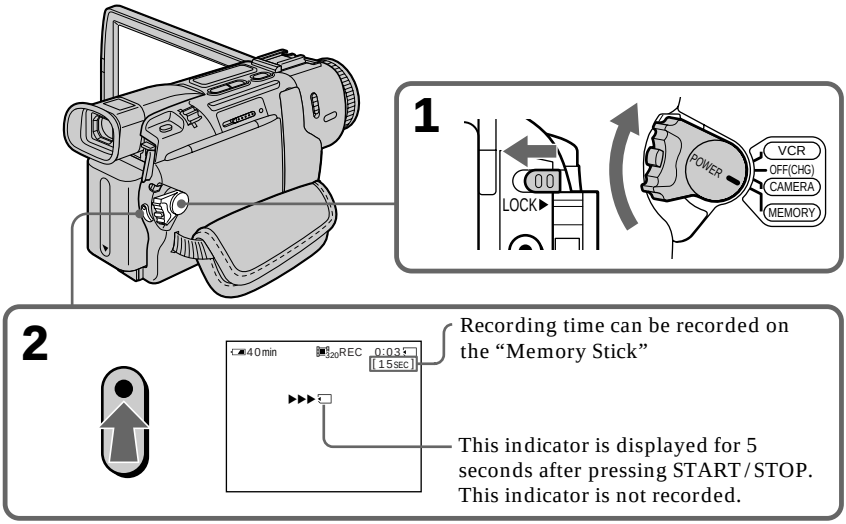


## To stop recording

Press START/STOP.

---

**Note**

Sound is recorded in monaural.

**When the POWER switch is set to MEMORY**

The following functions do not work:
– Wide TV
– Digital zoom
– SteadyShot function
– Super NightShot
– Fader
– Picture effect
– Digital effect
– Title
– Low lux mode (The indicator flashes.)
– Sports lesson mode (The indicator flashes.)

# Recording a picture from a tape as a moving picture

### – DCR-TRV17 only

Your camcorder can read moving picture data recorded on a tape and record it as a moving picture on a "Memory Stick." Your camcorder can also take in moving picture data through the input connector and record it as a moving picture on a "Memory Stick."

**Before operation**

- Insert a recorded tape into your camcorder.
- Insert a "Memory Stick" into your camcorder.

**(1)** Set the POWER switch to VCR.
**(2)** Press ►. The picture recorded on the tape is played back.
**(3)** Press START/STOP on your camcorder at the scene where you want to start recording from. The camera recording lamp located on the front of your camcorder lights up. When IMAGESIZE in the menu settings is set to 160 × 112, the maximum recording time is 60 seconds. However, when IMAGESIZE in the menu settings is set to 320 × 240, the maximum recording time is 15 seconds.

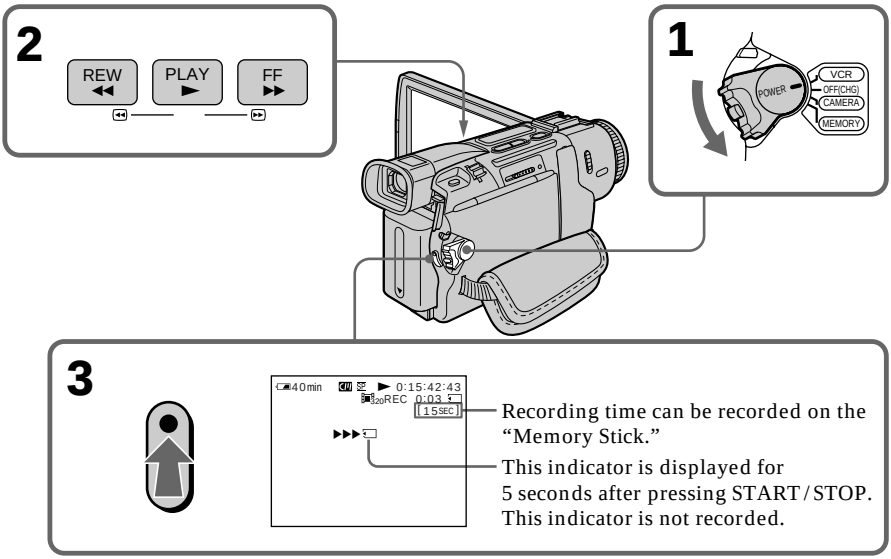


### To stop recording

Press START/STOP.

**Notes**
- Sound recorded in 48 kHz is converted to one in 32 kHz when recording images from a tape to "Memory Stick"s.
- Sound recorded in stereo is converted to monaural sound when recording from tapes.

**When the access lamp is lit or flashing**
Do not shake or strike the unit. As well do not turn the power off , eject a "Memory Stick" or remove the battery pack. Otherwise, the image data breakdown may occur.

**Titles have already recorded on tapes**
You cannot record the titles on "Memory Stick"s. The title does not appear while you are recording a moving image with START/STOP.

**Various settings when recorded**
You cannot record the various settings when recorded.

**If "AUDIO ERROR" is displayed**
Sound that cannot be recorded by your camcorder has been recorded. Connect the A/V connecting cable to input images from an external unit used to play back the image.

**During recording on "Memory Stick"**
- You cannot use the PB ZOOM function.
- You cannot record data codes from tape

## Recording a moving picture from other equipment

**Before operation**
Set DISPLAY to LCD in the menu settings. (The default setting is LCD.)

**(1)** Set the POWER switch to VCR.
**(2)** Play back the recorded tape, or turn the TV on to see the desired program. The image of the other equipment is displayed on the screen.
**(3)** Follow steps 3 on page 121.

### Using the A/V connecting cable

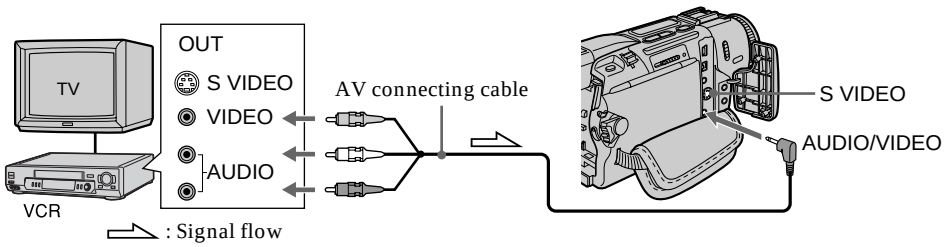


Connect the yellow plug of the A/V connecting cable to the video jack on the VCR or the TV.
Sound is recorded in monaural.

**If your TV or VCR has an S video jack**

Connect using an S video cable (optional) to obtain high-quality pictures.
With this connection, you do not need to connect the yellow (video) plug of the A/V connecting cable.
Connect an S video cable (optional) to the S video jacks of both your camcorder and the TV or VCR.
This connection produces higher quality DV format pictures.

## Using the i.LINK cable (DV connecting cable)

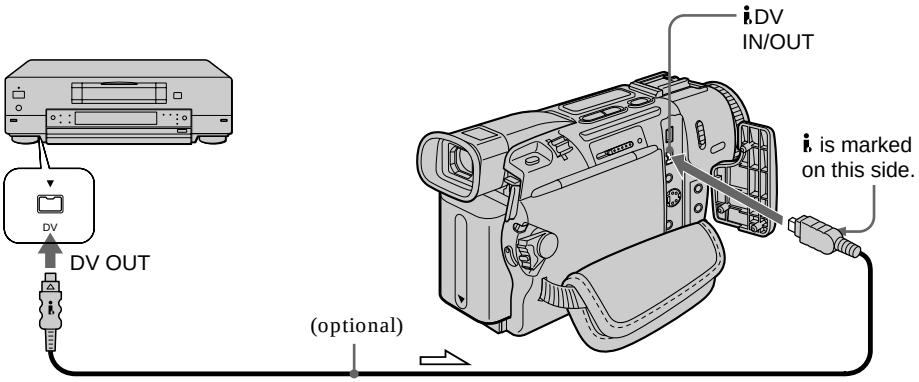


: Signal flow

**Note**

The "⚠" flashes in the following instances. If this happens, eject and insert the "Memory Stick" again, and record distortion-free images.
– When recording on a tape in a poor recording state, for example, on a tape that has been repeatedly used for dubbing
– When attempting to input images that are distorted due to poor radio wave reception when a TV tuner unit is in use

# Superimposing a still picture in a “Memory Stick” on a moving picture – MEMORY MIX

## – DCR-TRV17 only

You can superimpose a still picture you have recorded on a “Memory Stick” on the top of the moving picture you are recording.

**M. CHROM** (Memory chromakey)
You can swap a blue area of a still picture such as an illustration or a frame with a moving picture.

**M. LUMI** (Memory luminancekey)
You can swap a brighter area of a still picture such as a handwritten illustration or title with a moving picture. Record a title on a “Memory Stick” before a trip or event for convenience.

**C. CHROM** (Camera chromakey)
You can superimpose a moving picture on the top of a still picture such as a picture can be used as background. Shoot the subject against a blue background. The blue area of the moving picture will be swapped with a still picture.

**M. OVERLAP** (Memory overlap)
You can make a moving image fade in on top of a still image.

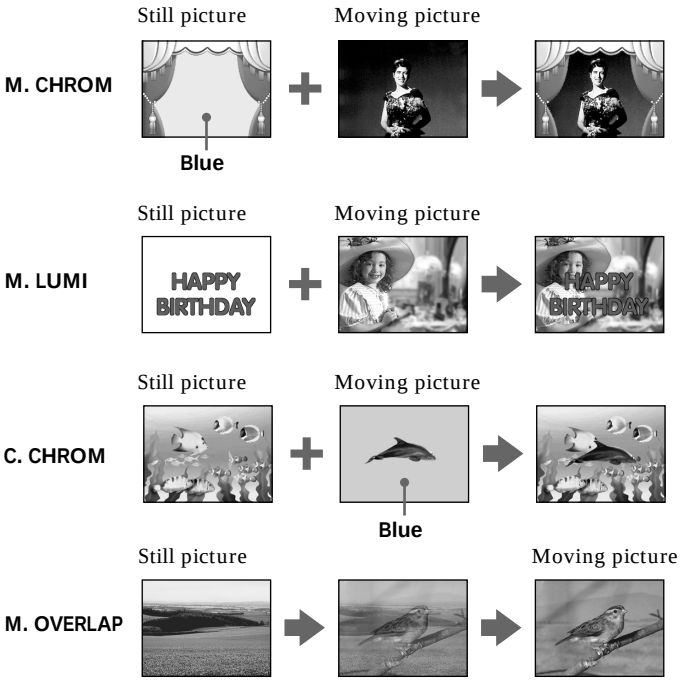

## Superimposing a still picture in a "Memory Stick" on a moving picture – MEMORY MIX

**Before operation**

- Insert a tape for recording into your camcorder.
- Insert a recorded "Memory Stick" into your camcorder.

**(1)** Set the POWER switch to CAMERA or MEMORY.
Make sure that the LOCK switch is set to the left (unlock) position.

**(2)** Press MEMORY MIX in the standby mode.
The last recorded or last composed image appears on the lower part of the screen as a thumbnail image.

**(3)** Press MEMORY+/– to select the still picture you want to superimpose.
To see the previous image, press MEMORY –. To see the next image, press MEMORY+.

**(4)** Turn the SEL/PUSH EXEC dial to select the desired mode.
The mode changes as follows:
M. CHROM ⟷ M. LUMI ⟷ C. CHROM ⟷ M. OVERLAP

**(5)** Press the SEL/PUSH EXEC dial.
The still picture is superimposed on the moving picture. Your camcorder automatically returns to the standby mode.

**(6)** Turn the SEL/PUSH EXEC dial to adjust the effect.

**(7)** Press START/STOP to start recording. Press PHOTO when you set the POWER switch to MEMORY.

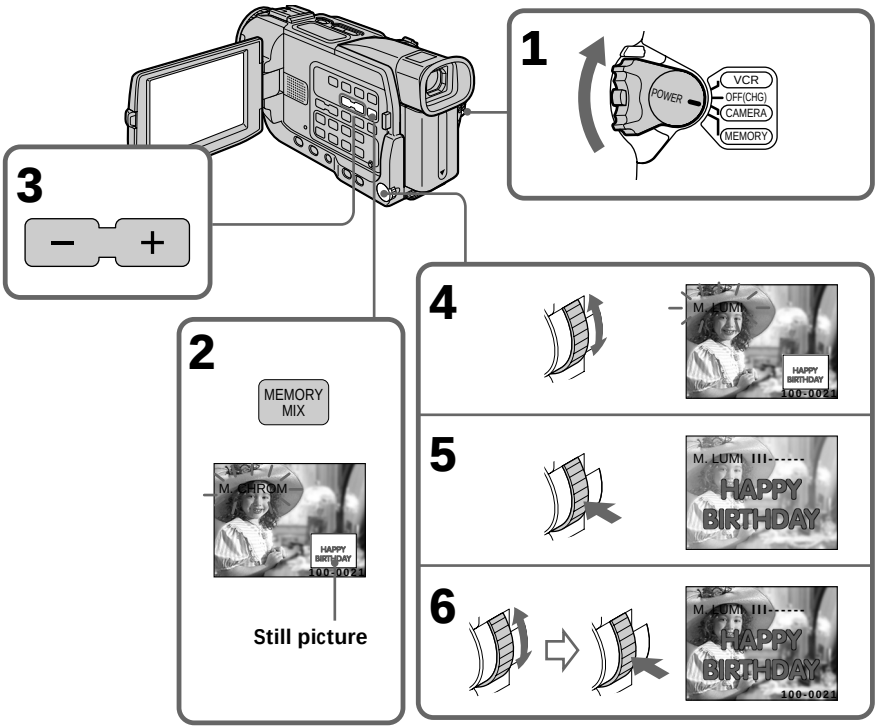

**Items to be adjusted**

| | |
|---|---|
| M. CHROM | The color (blue) scheme of the area in the still picture which is to be swapped with a moving picture |
| M. LUMI | The color (bright) scheme of the area in the still picture which is to be swapped with a moving picture |
| C. CHROM | The color (blue) scheme of the area in the moving picture which is to be swapped with a still picture |
| M. OVERLAP | No adjustment necessary |

The fewer bars there are on the screen, the stronger the effect.

## To change the still picture to be superimposed

Do either of the following:
– Press MEMORY+/– before step 6.
– Press the SEL/PUSH EXEC dial before step 6, and repeat the procedure from step 4. (Except for M.OVERLAP)

## To change the mode setting

Press the SEL/PUSH EXEC dial before step 6, and repeat the procedure from step 4. (Except for M.OVERLAP)

## To cancel MEMORY MIX

Press MEMORY MIX.

**Notes**

- You can not use MEMORY MIX function for moving pictures recorded on "Memory Stick"s.
- When the overlapping still image has a large amount of white, the thumbnail image of the picture may not be clear.

**Image data modified with computers or shot with other equipment**

You may not be able to play them back with your camcorder.

**When you set the POWER switch to MEMORY**

You cannot select M.OVERLAP.

**The "Memory Stick" supplied with your camcorder has stored 20 images**

– For M.CHROM : 18 images (such as a frame) 100-0001 ~ 100-0018
– For C.CHROM : 2 images (such as a background) 100-0019 ~ 100-0020

**Sample images**

Sample images stored in the "Memory Stick" supplied with your camcorder are protected (p. 143).

**During recording**

You cannot change the mode setting.

# Copying still images from a tape – Photo save

## – DCR-TRV17 only

Using the search function, you can automatically take in only still images from tapes and record them on a "Memory Stick" in sequence.

### Before operation

- Insert a recorded tape into your camcorder and rewind the tape.
- Insert a "Memory Stick" into your camcorder.

**(1)** Set the POWER switch to VCR.
**(2)** Press MENU to display the menu.
**(3)** Turn the SEL / PUSH EXEC dial to select ▭, then press the dial.
**(4)** Turn the SEL / PUSH EXEC dial to select PHOTO SAVE, then press the dial. "PHOTO BUTTON" appears on the screen.
**(5)** Press PHOTO deeper. The still image from the tape is recorded on a "Memory Stick." The number of still images copied is displayed. END is displayed when copying is completed.

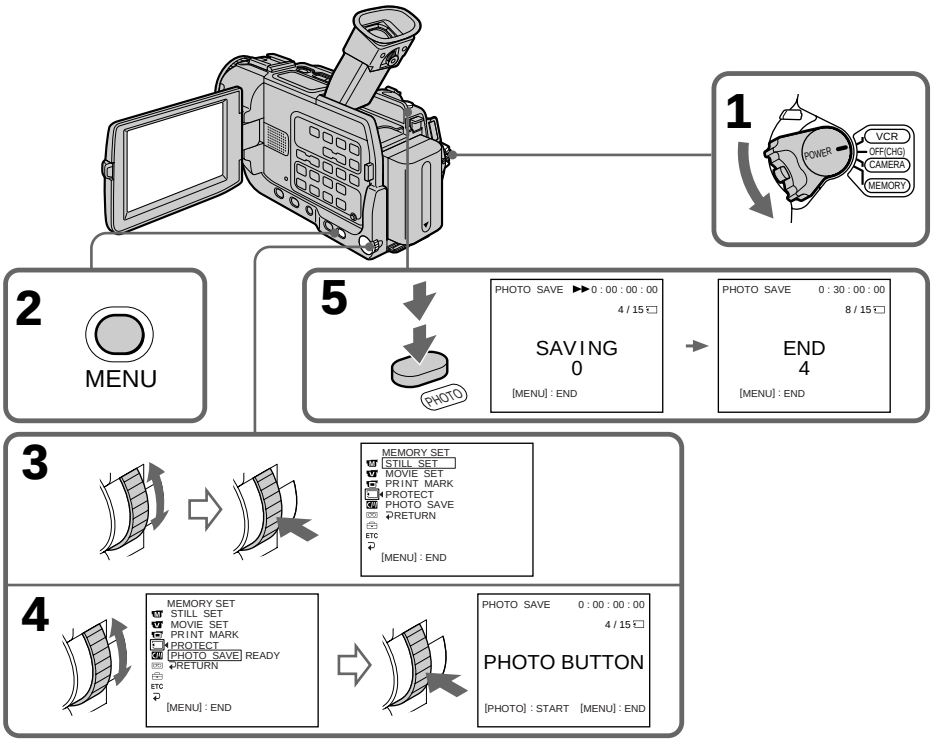

## To stop or end copying

Press MENU.

## When the memory of the "Memory Stick" is full

"MEMORY FULL" appears on the screen, and the copying stops. Insert another "Memory Stick" and repeat the procedure from step 2.

---

### When the access lamp is lit or flashing

Do not shake or strike your camcorder. As well do not turn the power off, eject a "Memory Stick" or remove the battery pack. Otherwise, the image data breakdown may occur.

### If the write-protect tab on the "Memory Stick" is set to LOCK

"NOT READY" appears when you select the item in the menu settings.

### When you change "Memory Stick"s in the middle of copying

Your camcorder resumes copying from the last image recorded on the previous "Memory Stick."

# Viewing a still picture – Memory photo playback

## – DCR-TRV17 only

You can play back still images recorded on a "Memory Stick." You can also play back six images at a time by selecting the index screen.

**Before operation**

Insert a "Memory Stick" into your camcorder.

**(1)** Set the POWER switch to MEMORY or VCR.
Make sure that the LOCK switch is set to the left (unlock) position.
**(2)** Press MEMORY PLAY. The last recorded image is displayed.
**(3)** Press MEMORY +/– to select the desired still image. To see the previous image, press MEMORY –. To see the next image, press MEMORY +.

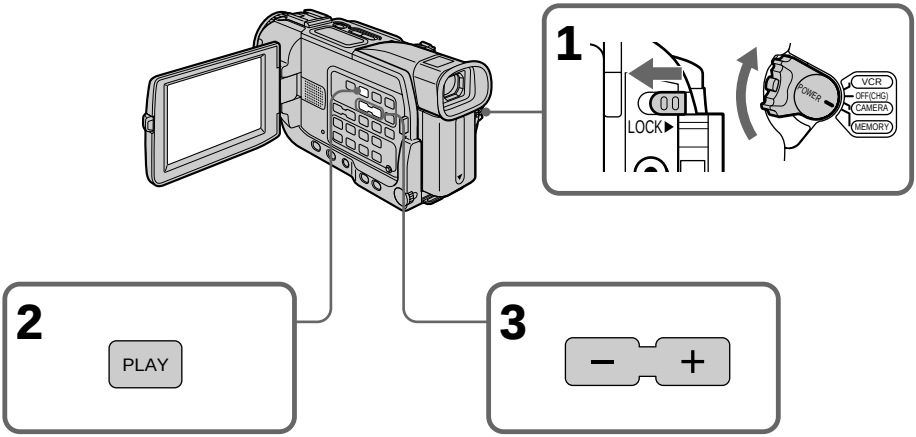


## To stop memory photo playback

Press MEMORY PLAY again.

**Note**

You may not be able to play back images properly in the following cases:
– when playing back on your camcorder image data modified with computer.
– when playing back image data on other equipment including other DCR-TRV17.

**Notes on the file name**

- The directory is not displayed if the structure of the directory does not conform to the DCF98 standard.
- "DIRECTORY ERROR" may appear on the screen if the structure of the directory does not conform to the DCF98 standard. While this message appears, you can play back images but cannot record them on the "Memory Stick".
- The file name flashes on the screen if the file is corrupted or the file is unreadable.

### To play back recorded images on a TV screen

- Connect your camcorder to the TV with the A/V connecting cable supplied with your camcorder before operation.
- When operating memory photo playback on a TV or on the LCD screen, the image quality may appear to have deteriorated. This is not a malfunction. The image data is as good as ever.
- Turn the audio volume of the TV down before operation, or noise (howling) may be output from the TV speakers.

### Recording data

When you press DATA CODE on the Remote Commander, you can see the recording data (date/time or various settings when recorded). Recording data are also recorded on "Memory Stick".

### When no image is recorded on the "Memory Stick"

The message "NO FILE" appears.

## Screen indicators during still image playback

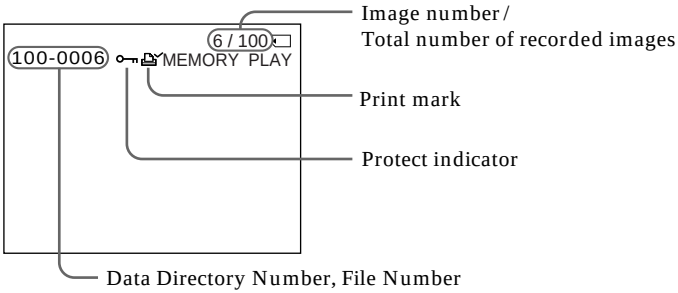

## Playing back six recorded images at a time (index screen)

You can play back six recorded images at a time. This function is especially useful when searching for a particular image.

**(1)** Set the POWER switch to MEMORY or VCR. Make sure that the LOCK switch is set to the left (unlock) position.
**(2)** Press MEMORY INDEX to display the index screen.

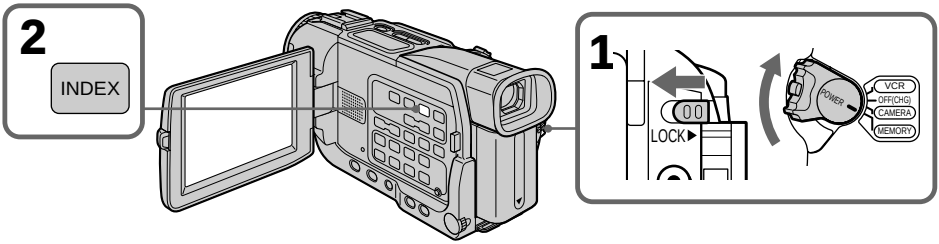


A red ▶ mark appears above the image that is displayed before changing to the index screen mode.

MEMORY – : to display the previous six images
MEMORY + : to display the following six images

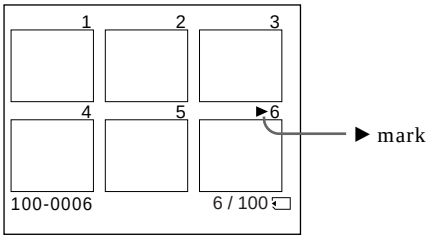


### To return to the normal playback screen (single screen)

Press MEMORY +/– to move the ▶ mark to the image you want to display on full screen, then press MEMORY PLAY.

**Note**

When displaying the index screen, the number appears above each image. This indicates the order in which images are recorded on the "Memory Stick." These numbers are different from the data file names.

**Image data modified with computers or shot with other equipment**

These files may not be displayed on the index screen.

# Viewing a moving picture – MPEG movie playback

## – DCR-TRV17 only

You can play back moving pictures recorded on a "Memory Stick." You can also play back 6 images including still images in order at a time by selecting the index screen.

**Before operation**

Insert a "Memory Stick" into your camcorder.

**(1)** Set the POWER switch to MEMORY or VCR. Make sure that the LOCK switch is set to the left (unlock) position.
**(2)** Press MEMORY PLAY. The last recorded image is displayed.
**(3)** Press MEMORY +/– to select the desired moving pictures. To see the previous picture, press MEMORY –. To see the next picture, press MEMORY +.
**(4)** Press MPEG ► II to start playback.

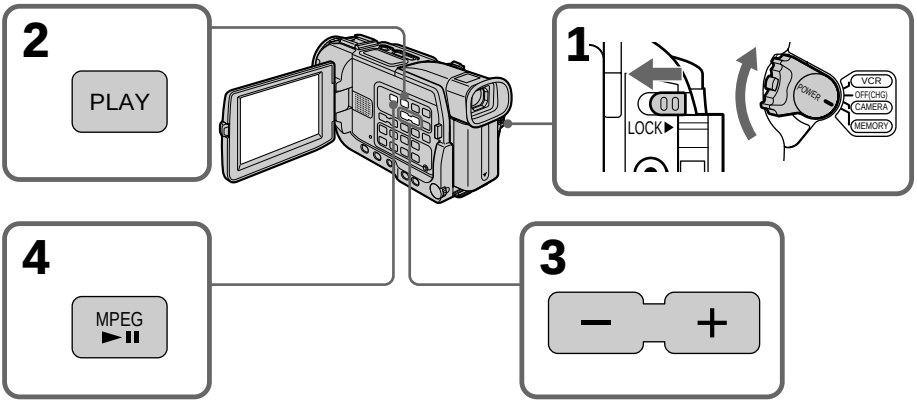


## To stop MPEG movie playback

Press MPEG ► II.

---

**Note**

You may not be able to play back images properly in the following cases:
– when playing back on your camcorder image data modified with computer
– when playing back image data on other equipment including other DCR-TRV17.

**To play back recorded images on a TV screen**

- Connect your camcorder to the TV with the A/V connecting cable supplied with your camcorder before operation.
- Turn the audio volume of the TV down before operation, or noise (howling) may be output from the TV speakers.

**Recording data**

When you press DATA CODE on the Remote Commander, you can see the recording data (date/time or various setting when recorded).

**When no image is recorded on the "Memory Stick"**

The message "NO FILE" appears.

## Screen indicators during moving picture playback

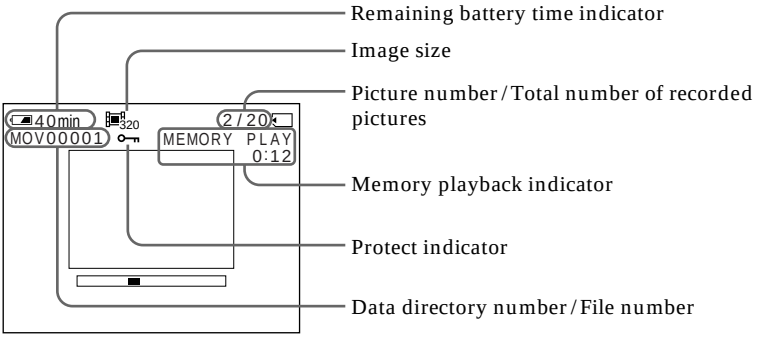

# Viewing images using computer

## – DCR-TRV17 only

You can view data recorded on the "Memory Stick" using your computer.

### On file format

Data recorded on the "Memory Stick" is stored in the following formats. Make sure that applications that support these file formats are installed on your computer.

- Still images: JPEG format
- Moving images / audio: MPEG format

ActiveMovie Player (DirectShow) must be installed (to play back moving pictures).
QuickTime 3.2 or newer must be installed (to play back moving pictures).

## Application software

For details on the application software, refer to the operating instructions supplied with the CD-ROM.

## Recommended USB connections environment

### Recommended Windows environment

OS: Microsoft Windows 98, Windows 98SE, Windows Me or Windows 2000 Professional standard installation is required.
However, operation is not assured if the above environment is upgraded OS.
CPU: MMX Pentium 200 MHz or faster
The USB connector must be provided as standard.

### Recommended Macintosh environment

Macintosh computer with the Mac OS 8.5.1 / 8.6 / 9.0 standard installation
However, note that the update to Mac OS 9.0 should be used for the following models.

- iMac with the Mac OS 8.6 standard installation and a slot loading type CD-ROM drive
- iBook or G4 with the Mac OS 8.6 standard installation

The USB connector must be provided as standard.

---

### Notes

- Operations are not guaranteed for either the Windows or Macintosh environment if you connect 2 or more USB equipment to a single computer at the same time, or when using a hub.
- Depending on the type of USB equipment that is used simultaneously, some equipment may not operate.
- Operations are not guaranteed for all the recommended computer environments mentioned above.
- All other product names mentioned herein may be the trademarks or registered trademarks of their respective companies.
- Furthermore, "™" and "®" are not mentioned in each case in this manual.

## Installing the USB driver

Before connecting your camcorder to your computer, install the USB driver to the computer. The USB driver is contained together with application software for viewing images on a CD-ROM which is supplied with your camcorder.

### For Windows 98/98SE, Windows 2000, Windows Me users

**(1)** Turn on your computer and allow Windows to load.
**(2)** Insert the supplied CD-ROM in the CD-ROM drive of your computer.
**(3)** Launch the application program on CD-ROM. After a moment, the dialog box appears on your desktop. Set the cursor on "USB Driver Installation for Windows 98/98SE/2000/Me" and click.
**(4)** The Setup program starts. Complete the installation on CD-ROM.
**(5)** Connect the USB jack on your camcorder with the USB connector on your computer using the supplied USB cable.
**(6)** Insert a "Memory Stick" into your camcorder, connect the AC power adaptor and set the POWER switch to MEMORY.
USB MODE appears on the LCD screen of your camcorder. Your computer recognizes the camcorder, and the Windows Add Hardware Wizard starts.
**(7)** The Add Hardware Wizard starts twice because 2 different USB drivers are installed. Be sure to allow the installation to complete without interrupting it.

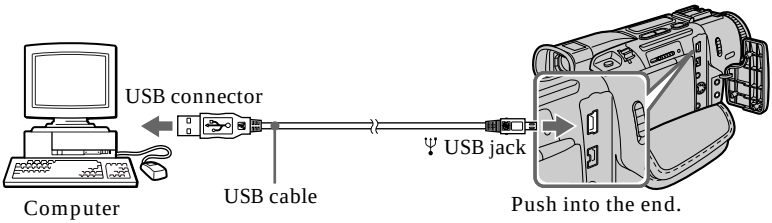


**Note**
You cannot install the USB driver if a "Memory Stick" is not in your camcorder.
Be sure to insert a "Memory Stick" into your camcorder before installing the USB driver.

### For Macintosh users

**(1)** Turn on your computer and allow the Mac OS to load.
**(2)** Insert the supplied CD-ROM in the CD-ROM drive of your computer.
**(3)** Double-click the CD-ROM drive icon to open the window.
**(4)** Double-click the icon of the hard disk containing the OS to open the window.
**(5)** Move the following 2 files from the window opened in step 3 to the System Folder icon in the window opened in step 4 (drag and drop).
- Sony Camcorder USB Driver
- Sony Camcorder USB Shim

**(6)** When "Put these items into the Extensions folder?" appears, click OK.
**(7)** Restart your computer.

## Viewing images

### For Windows 98 users

**(1)** Turn on the power of your computer and allow Windows 98 to load.
**(2)** Connect one end of the USB cable to the USB jack on the camcorder and the other end to the USB connector on your computer.
**(3)** Insert a "Memory Stick" into your camcorder, and connect the AC power adaptor to your camcorder and then to a wall outlet.
**(4)** Set the POWER switch to MEMORY.
USB MODE appears on the screen of the camcorder.
**(5)** Open "My Computer" on Windows 98 and double click the newly recognized drive. (Example: "Removable Disk (D:)")
The folders inside the "Memory Stick" are displayed.
**(6)** Select and double-click the desired image file from the folder.
For the detailed folder and file name, see "Image file storage destinations and image files" (p. 137).

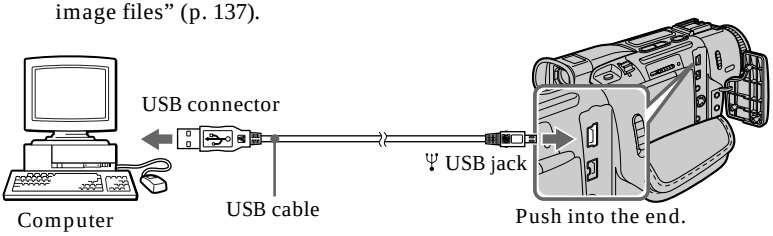


| Desired file type | Double-click in this order |
|---|---|
| Still image | "Dcim" folder → "100msdcf" folder → Image file |
| Moving picture* | "Mssony" folder → "Moml0001" folder → Image file* |

* Copying a file to the hard disk of your computer before viewing it is recommended. If you play back the file directly from the "Memory Stick", the image and sound may break off.

## Unplug the USB cable/Eject the "Memory Stick"

To unplug the USB cable or eject the "Memory Stick", follow the procedure below.

### For Windows 2000/Windows Me users

**(1)** Move the cursor to the "Unplug or Eject Hardware" icon on the Task Tray and click to cancel the applicable drive.
**(2)** A message to remove the device from the system appears, then unplug the USB cable or eject the "Memory Stick."

### For Macintosh users

**(1)** Quit application programs opened.
Make sure that the access lamp of the hard disk is not lit.
**(2)** Drag and drop the "Memory Stick" icon to the Trash or select Eject under the Special menu.
**(3)** Eject the "Memory Stick."

## Notes on using your computer

### "Memory Stick"

- "Memory Stick" operations on your camcorder cannot be assured if the "Memory Stick" has been formatted on your computer.
- Do not optimize the "Memory Stick" on a Windows machine. This will shorten the "Memory Stick" life.
- Do not compress the data on the "Memory Stick." Compressed files cannot be played back on your camcorder.

### Software

- Depending on your application software, the file size may increase when you open a still image file.
- When you load an image modified using a retouch software from your computer to the camcorder or when you directly modify the image on the camcorder, the image format will differ so a file error indicator may appear and you may be unable to open the file.

### Communications with your computer

Communications between your camcorder and your computer may not recover after recovering from Suspend, Resume, or Sleep.

## Image file storage destinations and image files

Image files recorded with your camcorder are grouped in folders by recording mode. The meanings of the file names are as follows. □□□□ stands for any number within the range from 0001 to 9999.

### For Windows 98 users (The drive recognizing the camcorder is [D:])

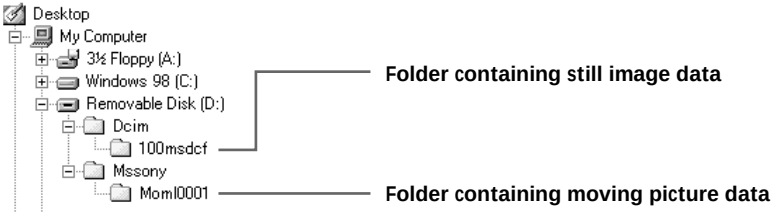


| Folder | File | Meaning |
|---|---|---|
| 100msdcf | DSC0□□□□.JPG | Still image file |
| Moml0001 | MOV0□□□□.MPG | Moving picture file |

# Copying the image recorded on “Memory Stick”s to tapes

### – DCR-TRV17 only

You can copy still images or titles recorded on “Memory Stick” and record them to a tape.

**Before operation**

- Insert a tape for recording into your camcorder.
- Insert a “Memory Stick” into your camcorder.

**(1)** Set the POWER switch to VCR.
**(2)** Using the video control buttons, search a point where you want to record the desired still image. Set the tape to playback pause.
**(3)** Press ● REC and the button on its right simultaneously on your camcorder. The tape is set to the recording pause mode.
**(4)** Press MEMORY PLAY and select the still image you want to copy by MEMORY +/–.
**(5)** Press ❚❚ to start recording and press ❚❚ again to stop.
**(6)** If you have more to copy, repeat steps 4 and 5.

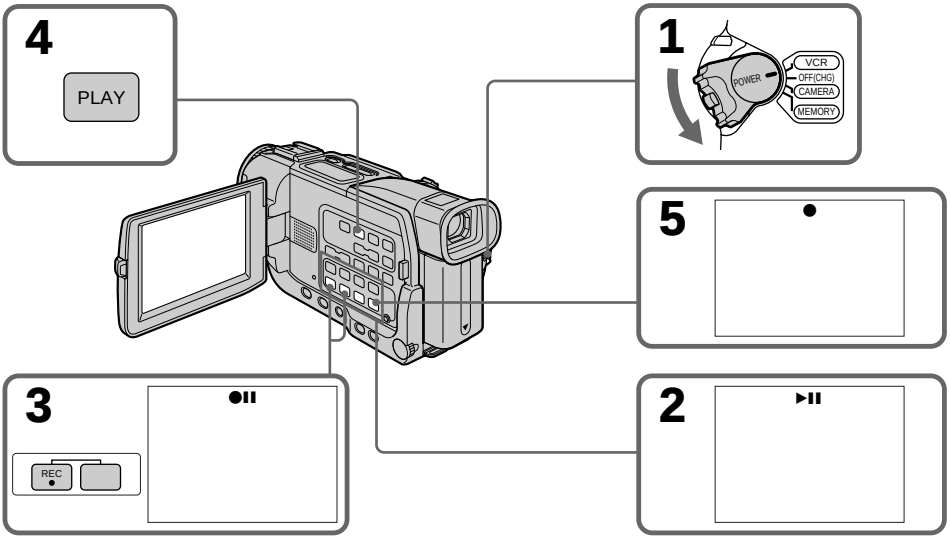


### To stop copying in the middle

Press ■.

---

**During copying**

You cannot operate the following buttons:
– MEMORY PLAY
– MEMORY INDEX
– MEMORY DELETE
– MEMORY +/–
– MEMORY MIX

**Note on the index screen**
You cannot record the index screen.

**If you press EDITSEARCH during pause mode**
Memory playback stops.

**Image data modified with computers or shot with other equipment**
You may not be able to copy them with your camcorder.

**If you press DISPLAY during recording or in recording standby mode**
You can see memory playback and the file name indicators in addition to the indicators pertinent to tapes, such as the time code indicator.

# Enlarging still images recorded on "Memory Stick"s – Memory PB ZOOM

## – DCR-TRV17 only

You can enlarge still images recorded on a "Memory Stick." You can select and view the desired part from the enlarged still image. Also, you can copy the desired part of the enlarged still image to tapes or video tapes.

### Before operation

Insert a "Memory Stick" into your camcorder.

**(1)** Set the POWER switch to MEMORY or VCR. Make sure that the LOCK switch is set to the left (unlock) position.

**(2)** In the memory playback mode, press PB ZOOM on your camcorder.
The still image is enlarged, and ↑ ↓ ← → appear on the screen.

**(3)** Turn the SEL / PUSH EXEC dial to move the enlarged image, then press the dial.
↑ : The image moves downwards.
↓ : The image moves upwards.

**(4)** Turn the SEL / PUSH EXEC dial to move the enlarged image, then press the dial.
→ : The image moves leftward. (Turn the dial upwards.)
← : The image moves rightward. (Turn the dial downwards.)

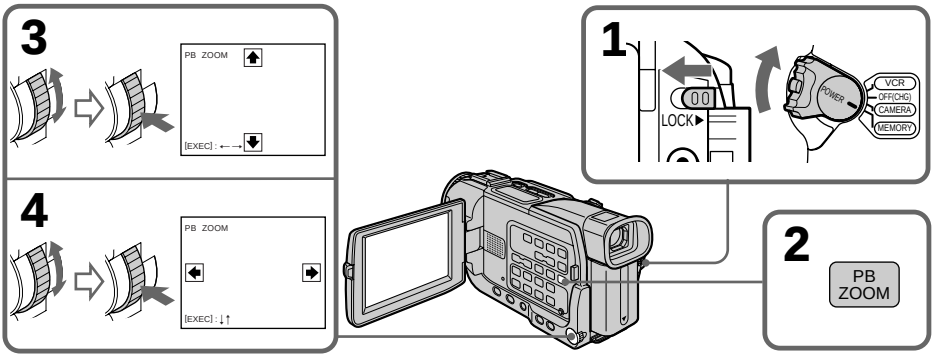


## To cancel the Memory PB ZOOM function

Press PB ZOOM.

---

### Note

You cannot copy the images enlarged by the PB ZOOM mode on "Memory Stick"s.

### In the PB ZOOM mode

The digital effect function does not work.

**The PB ZOOM function is cancelled when the following buttons are pressed:**
– MENU
– MEMORY PLAY
– MEMORY INDEX
– MEMORY +/–

**Pictures in the PB ZOOM mode**
Pictures in the PB ZOOM mode are not output through the i DV IN/OUT jack when the POWER switch is set to MEMORY.

**Moving pictures recorded on "Memory Stick"s**
The PB ZOOM function does not work on moving pictures recorded on "Memory Stick"s.

# Playing back images in a continuous loop – SLIDE SHOW

## – DCR-TRV17 only

You can automatically play back images in sequence. This function is useful especially when checking recorded images or during a presentation.

**Before operation**

Insert a "Memory Stick" into your camcorder.

**(1)** Set the POWER switch to MEMORY. Make sure that the LOCK switch is set to the left (unlock) position.
**(2)** Press MENU to display the menu.
**(3)** Turn the SEL / PUSH EXEC dial to select , then press the dial.
**(4)** Turn the SEL / PUSH EXEC dial to select SLIDE SHOW, then press the dial.
**(5)** Press MEMORY PLAY. Your camcorder plays back the images recorded on a "Memory Stick" in sequence.

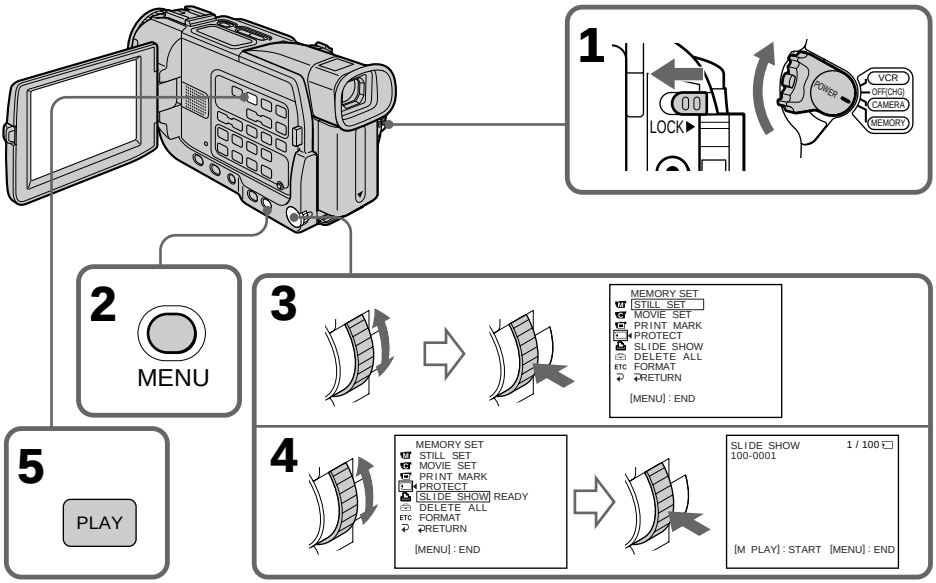


### To stop the slide show

Press MENU.

### To pause during a slide show

Press MEMORY PLAY.

### To start the slide show from a particular image

Select the desired image using MEMORY + / – buttons before step 2.

---

**To view the recorded images on TV**

Connect your camcorder to a TV with the A / V connecting cable supplied with your camcorder before operation.

**If you change the "Memory Stick" during operation**

The slide show does not operate. If you change the "Memory Stick," be sure to follow the steps again from the beginning.

# Preventing accidental erasure – Image protection

## – DCR-TRV17 only

To prevent accidental erasure of important images, you can protect selected images.

**Before operation**

Insert a "Memory Stick" into your camcorder.

**(1)** Set the POWER switch to MEMORY or VCR. Make sure that the LOCK switch is set to the left (unlock) position.
**(2)** Play back the image you want to protect.
**(3)** Press MENU to display the menu.
**(4)** Turn the SEL / PUSH EXEC dial to select ▭, then press the dial.
**(5)** Turn the SEL / PUSH EXEC dial to select PROTECT, then press the dial.
**(6)** Turn the SEL / PUSH EXEC dial to select ON, then press the dial.
**(7)** Press MENU to make the menu display disappear. The "🔑" mark is displayed beside the data file name of the protected image.

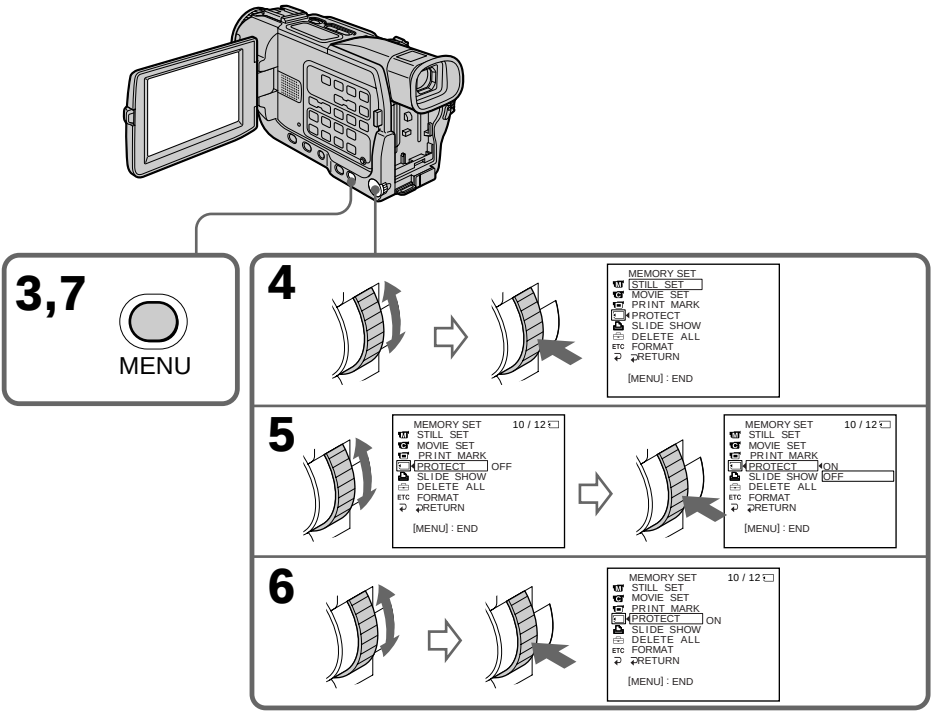


## To cancel image protection

Select OFF in step 6, then press the SEL / PUSH EXEC dial.

**Note**

Formatting erases all information on the "Memory Stick," including the protected image data. Check the contents of the "Memory Stick" before formatting.

**If the write-protect tab on the "Memory Stick" is set to LOCK**

You cannot carry out image protection.

# Deleting images

### – DCR-TRV17 only

You can delete images stored in a “Memory Stick.”
You can delete all images or selected images.

## Deleting selected images

**Before operation**
Insert a “Memory Stick” into your camcorder.

**(1)** Set the POWER switch to MEMORY or VCR. Make sure that the LOCK switch is set to the left (unlock) position.
**(2)** Play back the image you want to delete.
**(3)** Press MEMORY DELETE. “DELETE?” appears on the screen.
**(4)** Press MEMORY DELETE again. The selected image is deleted.

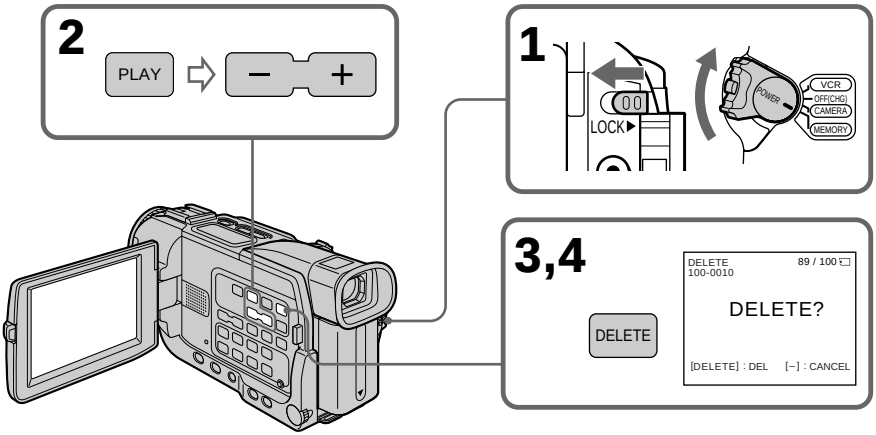


### To cancel deleting an image

Press MEMORY – in step 4.

### To delete an image displayed on the index screen

Press MEMORY +/– to move the ▶ indicator to the desired image and follow steps 3 and 4.

---

**Notes**
- To delete a protected image, first cancel image protection.
- Once you delete an image, you cannot restore it. Check the images to delete carefully before deleting them.

**If the write-protect tab on the “Memory Stick” is set to LOCK**
You cannot delete images.

## Deleting all the images

You can delete all the unprotected images in a "Memory Stick."

**Before operation**
Insert a "Memory Stick" into your camcorder.

**(1)** Set the POWER switch to MEMORY. Make sure that the LOCK switch is set to the left (unlock) position.
**(2)** Press MENU to display the menu.
**(3)** Turn the SEL / PUSH EXEC dial to select ⊡, then press the dial.
**(4)** Turn the SEL / PUSH EXEC dial to select DELETE ALL, then press the dial.
**(5)** Turn the SEL / PUSH EXEC dial to select OK, then press the dial. "OK" changes to "EXECUTE."
**(6)** Turn the SEL / PUSH EXEC dial to select EXECUTE, then press the dial. "DELETING" appears on the screen. When all the unprotected images are deleted, "COMPLETE" is displayed.

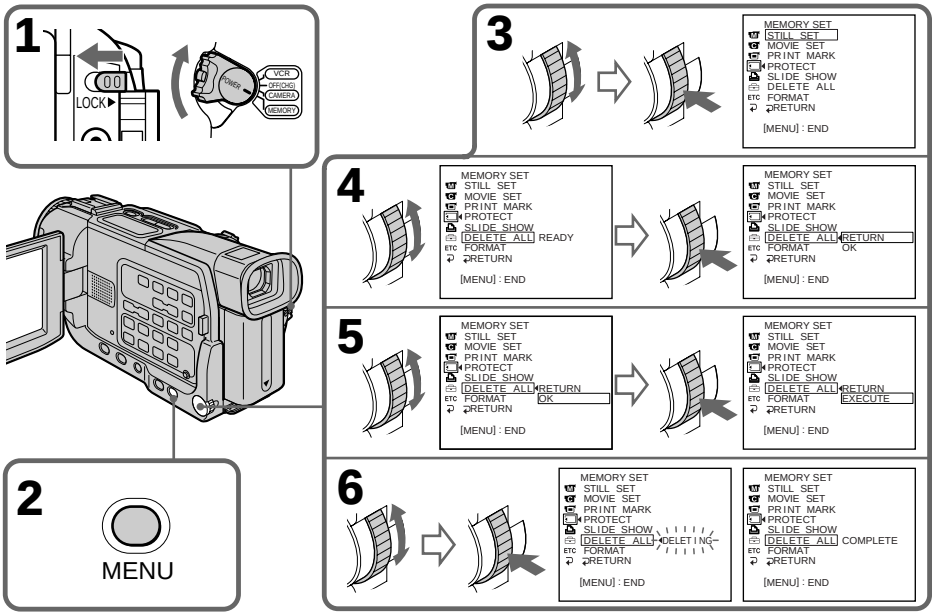


### To cancel deleting all the images in the "Memory Stick"

Select RETURN in step 5, then press the SEL / PUSH EXEC dial.

**While "DELETING" appears**
Do not turn the POWER switch or press any buttons.

# Writing a print mark – PRINT MARK

## – DCR-TRV17 only

You can specify the recorded still image to print out. This function is useful for printing out still images later.
Your camcorder conforms with the DPOF (Digital Print Order Format) standard for specifying the still images to print out.

**Before operation**
Insert a "Memory Stick" into your camcorder.

**(1)** Set the POWER switch to MEMORY or VCR. Make sure that the LOCK switch is set to the left (unlock) position.
**(2)** Play back the image you want to write a print mark.
**(3)** Press MENU to display the menu.
**(4)** Turn the SEL/PUSH EXEC dial to select , then press the dial.
**(5)** Turn the SEL/PUSH EXEC dial to select PRINT MARK, then press the dial.
**(6)** Turn the SEL/PUSH EXEC dial to select ON, then press the dial.
**(7)** Press MENU to make the menu display disappear. The "" mark is displayed beside the data file name of the image with a print mark.

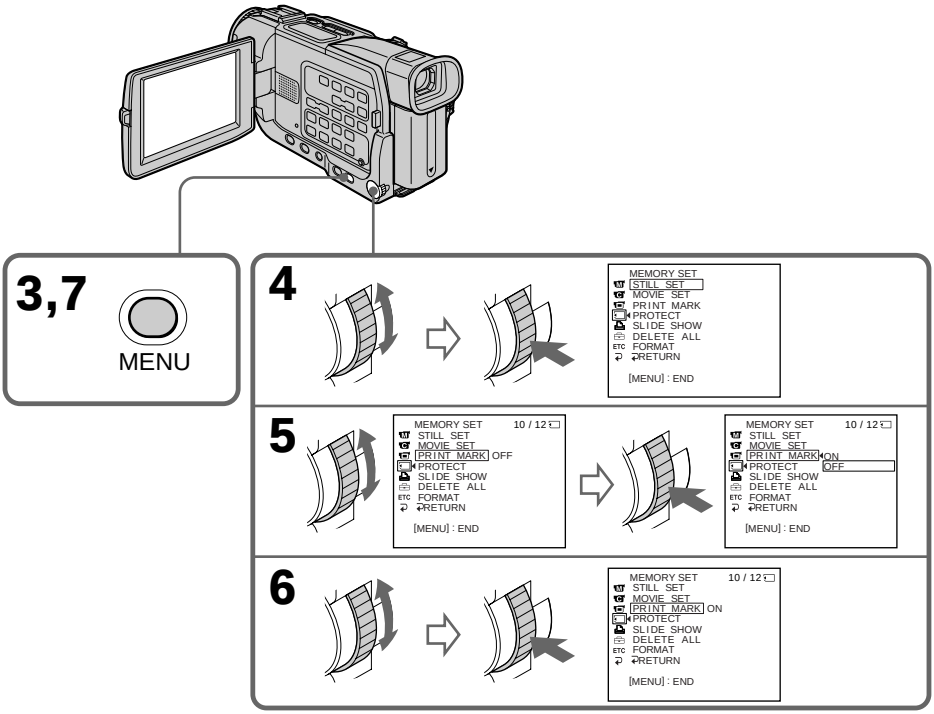

## To cancel writing print marks

Select OFF in step 6, then press the SEL/PUSH EXEC dial.

---

**If the write-protect tab on the "Memory Stick" is set to LOCK**

You cannot write print marks on still images.

**Moving pictures**

You cannot write print marks on moving pictures.

**While the file name is flashing**

You cannot write print marks on images.

# Using the printer (optional)

## – DCR-TRV17 only

You can use the printer (optional) on your camcorder to print images on the print paper.
For details, refer to the operating instructions of the printer.
There are various ways of printing still images. The following, however, describes how to print by selecting in the menu on your camcorder.

### Before operation

- Insert a recorded "Memory Stick" into your camcorder.
- Connect the printer to your camcorder as illustrated.

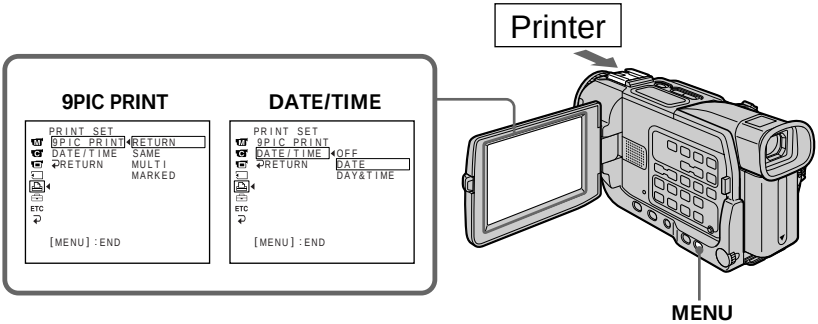


You can print 9 still images on the 9 split print paper. Select the desired mode in the menu settings.

**SAME PICS**

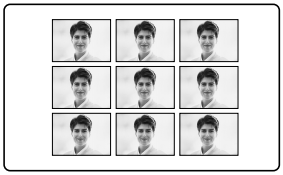

**MULTI PICS or MARKED PICS***

* 9 still images with print marks are printed together.

You can make prints with the recording date and / or recording time. Select the desired mode in the menu settings.

**DATE**

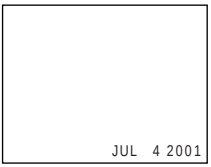


**DAY & TIME**

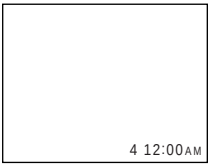


### Images recorded in multi screen mode

You cannot print images recorded in multi screen mode on sticker type print paper.

### You cannot print following images:

– Moving pictures recorded on "Memory Stick"
– Images processed by the PB ZOOM function

# Types of trouble and their solutions

If you run into any problem using your camcorder, use the following table to troubleshoot the problem. If the problem persists, disconnect the power source and contact your Sony dealer or local authorized Sony service facility. If "C:□□:□□" appears on the screen or the self-diagnosis display function has worked. See page 155.

## In the recording mode

| Symptom | Cause and/or Corrective Actions |
|---|---|
| START/STOP does not operate. | • The POWER switch is not set to CAMERA.<br>➔ Set it to CAMERA. (p. 21)<br>• The tape has run out.<br>➔ Rewind the tape or insert a new one. (p. 20, 33)<br>• The write-protect tab is set to expose the red mark.<br>➔ Use a new tape or slide the tab. (p. 20)<br>• The tape is stuck to the drum (moisture condensation).<br>➔ Remove the cassette and leave your camcorder for at least one hour to acclimatize. (p. 165) |
| The power goes off. | • While being operated in CAMERA mode, your camcorder has been in the standby mode for more than five minutes.<br>➔ Set the POWER switch to OFF (CHG) and then to CAMERA. (p. 21)<br>• The battery pack is dead or nearly dead.<br>➔ Install a charged battery pack. |
| The image on the viewfinder is not clear. | • The viewfinder lens is not adjusted.<br>➔ Adjust the viewfinder lens. (p. 24) |
| The SteadyShot function does not work. | • STEADYSHOT is set to OFF in the menu settings.<br>➔ Set it to ON. (p. 97) |
| The autofocusing function does not work. | • The setting is the manual focus.<br>➔ Press FOCUS to set to the auto focus mode. (p. 53)<br>• Shooting conditions are not suitable for autofocus.<br>➔ Adjust to focus manually. (p. 53) |
| The picture does not appear in the viewfinder. | • The LCD panel is open.<br>➔ Close the LCD panel. (p. 22) |
| A vertical band appears when you shoot a subject such as lights or a candle flame against a dark background. | • The contrast between the subject and background is too high. Your camcorder is not a malfunction. |
| A vertical band appears when you shoot a very bright subject. | • Your camcorder is not a malfunction. |
| Some tiny white spots appear on the screen. | • Slow shutter, low lux or Super NightShot mode is activated. This is not a malfunction. |
| An unknown picture is displayed on the screen. | • If 10 minutes elapse after you set the POWER switch to CAMERA or DEMO MODE is set to ON in the menu settings without a cassette inserted, your camcorder automatically starts the demonstration.<br>➔ Insert a cassette and the demonstration stops. You can also cancel DEMO MODE. (p. 101) |

(continued on the following page)

| Symptom | Cause and/or Corrective Actions |
|---|---|
| The picture is recorded in incorrect or unnatural colors. | • NIGHTSHOT is set to ON.<br>➔ Set it to OFF. (p. 27) |
| The picture appears too bright, and the subject does not appear on the screen. | • NIGHTSHOT is set to ON in a bright place.<br>➔ Set it to OFF . (p. 27)<br>• BACK LIGHT is activated.<br>➔ Deactivate it. |
| The click of the shutter does not sound. | • BEEP is set to OFF in the menu settings.<br>➔ Set it to MELODY or NORMAL. (p. 102) |
| Black bands appear when you record TV or computer screen. | ➔ Set the STEADYSHOT in the menu settings to OFF. (p. 97) |

## In the playback mode

| Symptom | Cause and/or Corrective Actions |
|---|---|
| The tape does not move when a video control button is pressed. | • The POWER switch is not set to VCR.<br>➔ Set it to VCR. (p. 31) |
| The playback button does not work. | • The tape has run out.<br>➔ Rewind the tape. (p. 33) |
| There are horizontal lines on the picture or the playback picture is not clear or does not appear. | • The video head may be dirty.<br>➔ Clean the heads using the cleaning cassette (optional). (p. 166) |
| No sound or only a low sound is heard when playing back a tape. | • The volume is turned to minimum.<br>➔ Turn up the volume. (p. 31)<br>• AUDIO MIX is set to ST2 in the menu settings.<br>➔ Adjust AUDIO MIX. (p. 98) |
| Displaying the recorded date, date search function does not work. | • The tape has no cassette memory.<br>➔ Use a tape with cassette memory. (p. 62)<br>• CM SEARCH is set to OFF in the menu settings.<br>➔ Set it to ON. (p. 100)<br>• The tape has a blank portion in the recorded portion. (p. 62) |
| The title search function does not work. | • The tape has no cassette memory.<br>➔ Use a tape with cassette memory. (p. 62)<br>• CM SEARCH is set to OFF in the menu settings.<br>➔ Set it to ON. (p. 100)<br>• There is no title in the tape.<br>➔ Superimpose the titles. (p. 89)<br>• The tape has a blank portion in the recorded portion. (p. 90) |
| The new sound added to the recorded tape is not heard. | • AUDIO MIX is set to ST1 side in the menu settings.<br>➔ Adjust AUDIO MIX. (p. 98) |
| The title is not displayed. | • TITLE DSPL is set to OFF in the menu settings.<br>➔ Set it to ON. (p. 100) |

## In the recording and playback modes

| Symptom | Cause and/or Corrective Actions |
|---|---|
| The power does not turn on. | • The battery pack is not installed, or is dead or nearly dead.<br>➔ Install a charged battery pack. (p. 12, 13)<br>• The AC power adaptor is not connected to a wall outlet.<br>➔ Connect the AC power adaptor to a wall outlet. (p. 17) |
| The end search function does not work. | • The tape was ejected after recording when using a tape without cassette memory. (p. 30)<br>• You have not recorded on the new cassette yet. (p. 30) |
| The end search function does not work correctly. | • The tape has a blank portion in the beginning or middle. |
| The battery pack is quickly discharged. | • The operating temperature is too low.<br>• The battery pack is not fully charged.<br>➔ Charge the battery pack again. (p. 13)<br>• The battery pack is completely dead, and cannot be recharged.<br>➔ Replace with a new battery pack. (p. 12) |
| The battery remaining indicator does not indicate the correct time. | • You have used the battery pack in an extremely hot or cold environment for a long time.<br>• The battery pack is completely dead, and cannot be recharged.<br>➔ Replace with a new battery pack. (p. 12)<br>• The battery is not fully charged.<br>➔ Charge the battery pack fully again. (p. 13)<br>• A deviation has occured in the remaining battery time.<br>➔ Charge the battery fully. (p. 13) |
| The power goes off although the battery remaining indicator indicates that the battery pack has enough power to operate. | • A deviation has occured in the remaining battery time.<br>➔ Charge the battery pack fully again so that the indication on the battery remaining indicator is correct. (p. 13) |
| The cassette cannot be removed from the holder. | • The power source is disconnected.<br>➔ Connect it firmly. (p. 12, 17)<br>• The battery is dead.<br>➔ Use a charged battery pack. (p. 12, 13) |
| The ⬇ and ⏏ indicators flash and no functions except for cassette ejection work. | • Moisture condensation has occurred.<br>➔ Remove the cassette and leave your camcorder for at least one hour to acclimatize. (p. 165) |
| CM indicator does not appear when using a tape with cassette memory. | • The gold-plated connector of the tape is dirty or dusty.<br>➔ Clean the gold-plated connector. (p. 158) |
| Remaining tape indicator is not displayed. | • The REMAIN is set to AUTO in the menu settings.<br>➔ Set it to ON to always display the remaining tape indicator. (p. 101) |

(continued on the following page)

## When operating using the "Memory Stick"

### – DCR-TRV17 only

| Symptom | Cause and/or Corrective Actions |
|---|---|
| The "Memory Stick" does not function. | • The POWER switch is not set to MEMORY.<br>➔ Set it to MEMORY. (p. 112)<br>• The "Memory Stick" is not inserted.<br>➔ Insert a "Memory Stick". (p. 105) |
| Recording does not function. | • The "Memory Stick" has already been recorded to its full capacity.<br>➔ Delete unnecessary images and record again. (p. 144)<br>• The "Memory Stick" formatted incorrectly is inserted.<br>➔ Format the "Memory Stick" or use another "Memory Stick. " (p. 100)<br>• The write-protect tab on the "Memory Stick" is set to LOCK.<br>➔ Release the lock. (p. 103) |
| The image cannot be deleted. | • The image is protected.<br>➔ Cancel image protection. (p. 143)<br>• The write-protect tab on the "Memory Stick" is set to LOCK.<br>➔ Release the lock. (p. 103) |
| You cannot format the "Memory Stick". | • The write-protect tab on the "Memory Stick" is set to LOCK.<br>➔ Release the lock. (p. 103) |
| Deleting all the images cannot be carried out. | • The write-protect tab on the "Memory Stick" is set to LOCK.<br>➔ Release the lock. (p. 103) |
| You cannot protect the image. | • The write-protect tab on the "Memory Stick" is set to LOCK.<br>➔ Release the lock. (p. 103)<br>• The image to protect is not be played back.<br>➔ Press MEMORY PLAY to play back the image. (p. 129) |
| You cannot write a print mark on the still image. | • The write-protect tab on the "Memory Stick" is set to LOCK.<br>➔ Release the lock. (p. 103)<br>• The image to write a print mark is not be played back.<br>➔ Press MEMORY PLAY to play back the image. (p. 129) |
| The photo save function does not work. | • The write-protect tab on the "Memory Stick" is set to LOCK.<br>➔ Release the lock. (p. 103)<br>• The battery pack is dead.<br>➔ Install a charged battery pack or use the AC power adaptor |
| You cannot play back images in actual size. | • You may not be able to play back images in actual size when you try to play back images recorded by other equipment.<br>➔ This is not a malfunction. |

## Others

| Symptom | Cause and/or Corrective Actions |
|---|---|
| The title is not recorded. | • The tape has no cassette memory.<br>➔ Use a tape with cassette memory. (p. 89, 158)<br>• The cassette memory is full.<br>➔ Erase unnecessary title. (p. 91)<br>• The tape is set to prevent accidental erasure.<br>➔ Slide the write-protect tab so that red portion is not visible. (p. 20)<br>• Nothing is recorded in that position on the tape.<br>➔ Superimpose the title to the recorded position. (p. 89) |
| The cassette label is not recorded. | • The tape has no cassette memory.<br>➔ Use a tape with cassette memory. (p. 94, 158)<br>• The cassette memory is full.<br>➔ Erase some titles. (p. 91)<br>• The tape is set to prevent accidental erasure.<br>➔ Slide the write-protect tab so that red portion is not visible. (p. 20) |
| Digital program editing does not function. | • The input selector on the VCR is not set correctly.<br>➔ Check the connection and set the input selector on the VCR again. (p. 66, 67)<br>• The camcorder is connected to DV equipment of other than Sony.<br>➔ Set it to IR. (p. 69)<br>• Setting program on a blank portion of the tape is attempted.<br>➔ Set the program again on a recorded portion. (p. 76)<br>• The camcorder and the VCR are not synchronized.<br>➔ Adjust the synchronicity. (p. 73) |
| The Remote Commander supplied with your camcorder does not work. | • COMMANDER is set to OFF in the menu settings.<br>➔ Set it to ON. (p. 102)<br>• Something is blocking the infrared rays.<br>➔ Remove the obstacle.<br>• The batteries are inserted in the battery holder with the + – polarities incorrectly matching the + – marks.<br>➔ Insert the batteries with the correct polarity. (p. 178)<br>• The batteries are dead.<br>➔ Insert new ones. (p. 178) |
| The picture from a TV or VCR does not appear even when your camcorder is connected to output on the TV or VCR. | • DISPLAY is set to V-OUT/LCD in the menu settings.<br>➔ Set it to LCD. (p. 102) |

(continued on the following page)

| Symptom | Cause and/or Corrective Actions |
|---|---|
| The melody or beep sounds for five seconds. | • Moisture condensation has occurred.<br>➔ Remove the cassette and leave your camcorder for at least one hour to acclimatize. (p. 165)<br>• Some troubles have occurred in your camcorder.<br>➔ Remove the cassette and insert it again, then operate your camcorder. |
| No function works though the power is on. | • Disconnect the power cord of the AC power adaptor or remove the battery, then reconnect it in about one minute. Turn the power on. If the functions still do not work, open the LCD panel and press the RESET button beside the ● REC button using a sharp-pointed object. (If you press the RESET button, all the settings including the date and time return to the default.) (p. 176) |
| While charging the battery pack, no indicator appears or the indicator flashes in the display window. | • The battery pack is not properly installed.<br>➔ Install it properly.<br>• Something is wrong with the battery pack.<br>➔ Contact your Sony dealer or local authorized Sony service facility. |
| You cannot charge the battery pack. | • The POWER switch is not set to OFF (CHG).<br>➔ Set it to OFF (CHG). |

# Self-diagnosis display

Your camcorder has a self-diagnosis display function.
This function displays the current condition of your camcorder as a 5-digit code (a combination of a letter and figures) in the viewfinder, on the LCD screen or in the display window. If a 5-digit code is displayed, check the following code chart. The last two digits (indicated by □□) will differ depending on the state of your camcorder.

**LCD screen, Viewfinder or Display window**

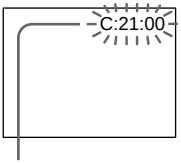


**Self-diagnosis display**

- C:□□:□□
  You can service your camcorder yourself.
- E:□□:□□
  Contact your Sony dealer or local authorized Sony service facility.

| Five-digit display | Cause and/or Corrective Actions |
|---|---|
| C:04:□□ | • You are using a battery pack that is not an "InfoLITHIUM" battery pack.<br>➔ Use an "InfoLITHIUM" battery pack. (p. 160) |
| C:21:□□ | • Moisture condensation has occurred.<br>➔ Remove the cassette and leave your camcorder for at least one hour to acclimatize. (p. 165) |
| C:22:□□ | • The video heads are dirty.<br>➔ Clean the heads using the cleaning cassette (optional). (p. 166) |
| C:31:□□<br>C:32:□□ | • A malfunction other than the above that you can service has occurred.<br>➔ Remove the cassette and insert it again, then operate your camcorder.<br>➔ Disconnect the power cord of the AC power adaptor or remove the battery pack. After reconnecting the power source, operate your camcorder. |
| E:61:□□<br>E:62:□□ | • A malfunction that you cannot service has occurred.<br>➔ Contact your Sony dealer or local authorized Sony service facility and inform them of the 5-digit code. (example: E:61:10) |

If you are unable to rectify the problem even if you try corrective actions a few times, contact your Sony dealer or local authorized Sony service facility.

# Warning indicators and messages

If indicators and messages appear on the screen, check the following:
See the page in parentheses "( )" for more information.

## Warning indicators

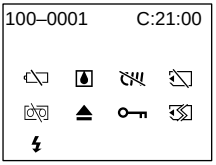


100-0001 **Warning indicator as to file**
Slow flashing:
- The file is corrupted.
- The file is unreadable.
- You are trying to carry out MEMORY MIX function on moving picture.

C:21:00 **Self-diagnosis display** (p. 155)

**The battery is dead or nearly dead**
Slow flashing:
- The battery is nearly dead.
  Depending on the operating conditions, environment and battery condition, the indicator may flash, even if there are approximately 5 to 10 minutes remaining.

Fast flashing:
- The battery is dead.

**Moisture condensation has occurred***
Fast flashing:
- Eject the cassette, turn off your camcorder, and leave it for about 1 hour with the cassette compartment open (p. 165).

**Warning indicator as to cassette memory***
Slow flashing:
- No tape with cassette memory is inserted (p. 158).

**Warning indicator as to "Memory Stick"****
Slow flashing:
- No "Memory Stick" is inserted.

Fast flashing:
- The "Memory Stick" is not readable with your camcorder (p. 103).
- The image cannot be recorded on "Memory Stick" (p. 122).

**Warning indicator as to "Memory Stick" formatting****
Fast flashing:
- "Memory Stick" is not formatted correctly (p. 100).
- The "Memory Stick" data is corrupted.*

**Warning indicator as to tape**
Slow flashing:
- The tape is near the end.
- No tape is inserted.*
- The write-protect tab on the cassette is out (red) (p. 20).*

Fast flashing:
- The tape has run out.*

**You need to eject the cassette***
Slow flashing:
- The write-protect tab on the cassette is out (red) (p. 20).

Fast flashing:
- Moisture condensation has occurred (p. 165).
- The tape has run out.
- The self-diagnosis display function is activated (p. 155).

**The still image is protected***
Slow flashing:
- The still image is protected (p. 143).

**Warning indicator as to the external flash (optional)**
Slow flashing:
- During charging.

Fast flashing:
- There is something wrong with the flash (optional) while charging.

* You hear the melody or beep sound.

** DCR-TRV17 only

## Warning messages

| | |
|---|---|
| • CLOCK SET | Set the date and time (p. 18). |
| • FOR "InfoLITHIUM" BATTERY ONLY | Use an "InfoLITHIUM" battery pack (p. 160). |
| • CLEANING CASSETTE*3) | The video heads are dirty (p. 166). |
| • FULL | The tape cassette memory is full.*2) |
| • 16BIT | AUDIO MODE is set to 16BIT (p. 101).*2) You cannot dub new sound. |
| • REC MODE | REC MODE is set to LP (p. 101).*2) You cannot dub new sound. |
| • TAPE | There is no recorded portion on the tape.*2) You cannot dub new sound. |
| • "i.LINK" CABLE | i.LINK cable is connected (p. 88).*2) You cannot dub new sound. |
| • FULL*1) | The "Memory Stick" is full (p. 115).*2) |
| • *1) | The write-protect tab on the "Memory Stick" is set to LOCK (p. 103).*2) |
| • NO FILE*1) | No still image is recorded on the "Memory Stick" (p. 130).*2) |
| • NO MEMORY STICK*1) | No "Memory Stick" is inserted.*2) |
| • AUDIO ERROR*1) | You are trying to record an image with sound that cannot be recorded by your camcorder on the "Memory Stick".*2) |
| • NO STILL IMAGE FILE | No still image is recorded on the "Memory Stick"though you are trying to print in the 9 PIC PRINT mode. |
| • MEMORY STICK ERROR*1) | The "Memory Stick" data is corrupted (p. 105).*2) |
| • FORMAT ERROR*1) | The "Memory Stick" is not recognized. Check the format (p. 100).*2) |
| • DIRECTORY ERROR*1) | There are more than two same directories (p. 129).*2) |
| • COPY INHIBIT | The tape contains copyright control signals for copyright protection of software (p. 158).*2) |
| • TAPE END | The tape has reached the end of the tape.*2) |
| • NO TAPE | Insert a cassette tape.*2) |
| • DELETING | You have pressed PHOTO during deleting all images on "Memory Stick." |
| • FORMATTING | You have pressed PHOTO during formatting a "Memory Stick." |

*1) DCR-TRV17 only
*2) You hear the melody or beep sound.
*3) The ⊗ indicator and " CLEANING CASSETTE" message appear one after another on the screen.

# Usable cassettes

## Selecting cassette types

You can use the Mini DV mini DV cassette only*. You cannot use any other 8 8 mm, Hi8 Hi8, Digital8 Digital8, VHS VHS, VHSC VHSC, S-VHS S-VHS, S-VHSC S-VHSC, β Betamax, ED Beta ED Betamax or DV DV cassette.

* There are two types of mini DV cassettes: with cassette memory and without cassette memory. Tapes with cassette memory have CM (Cassette Memory) mark.
We recommend you to use the tape with cassette memory.

The IC memory is mounted on this type of cassette. Your camcorder can read and write data such as dates of recording or titles, etc. to this memory.
The functions using the cassette memory require successive signals recorded on the tape. If the tape has a blank portion in the beginning or between the recorded portions, a title may not be displayed properly or the search functions may not work properly. Not to make any blank portion on the tape, operate the followings.
Press END SEARCH to go to the end of the recorded portion before you begin the next recording if you operate the followings:
– you have ejected the cassette while recording.
– you have played back the tape in the VCR.
– you have used the edit search function.
If there is a blank portion or discontinuous signal on your tape, re-record from the beginning to the end of the tape concerning above.
The same result may occur when you record using a digital video camera recorder without a cassette memory function on a tape recorded by one with the cassette memory function.

---

**CM 4K mark on the cassette**

The memory capacity of tapes marked with CM 4K is 4KB. Your camcorder can accommodate tapes having a memory capacity of up to 16KB. 16KB tape is marked with CM 16K.

Mini DV Digital Video Cassette This is the Mini DV mark.

CM Cassette Memory This is the Cassette Memory mark.

These are trademarks.

## Copyright signal

**When you play back**

Using any other video camera recorder, you cannot record on tape that has recorded a copyright control signals for copyright protection of software which is played back on your camcorder.

**When you record**

**You cannot record software on your camcorder that contains copyright control signals for copyright protection of software.**

“COPY INHIBIT” appears on the screen, in the viewfinder or on the TV screen if you try to record such software.
Your camcorder does not record copyright control signals on the tape when it records.

## Audio mode

12-bit mode: The original sound can be recorded in stereo 1, and the new sound in stereo 2 in 32 kHz. The balance between stereo 1 and stereo 2 can be adjusted by selecting AUDIO MIX in the menu settings during playback. Both sounds can be played back.
16-bit mode: A new sound cannot be recorded but the original sound can be recorded in high quality. Moreover, it can also play back sound recorded in 32 kHz, 44.1 kHz or 48 kHz. When playing back a tape recorded in the 16-bit mode, 16BIT indicator appears on the LCD screen or in the viewfinder.

## When you play back a dual sound track tape

When you play back a dual sound track tape recorded in a stereo system, set "HiFi SOUND" to the desired mode in the menu settings (p. 98).

**Sound from speaker**

| HiFi SOUND mode | Playing back a stereo tape | Playing back a dual sound track tape |
|---|---|---|
| STEREO | Stereo | Main sound and sub sound |
| 1 | Left sound | Main sound |
| 2 | Right sound | Sub sound |

You cannot record dual sound programs on your camcorder.

## Notes on the cassette

### When affixing a label on the cassette

Be sure to affix a label only on the locations as illustrated below **[a]** so as not to cause a malfunction of your camcorder.

### After using the cassette

Rewind the tape to the beginning, put the cassette in its case, and store it in an upright position.

### When the cassette memory function does not work

Reinsert a cassette. The gold-plated connector of cassettes may be dirty or dusty.

### Cleaning the gold-plated connector

If the gold-plated connector of cassettes is dirty or dusty, you may not operate the function using cassette memory. Clean up the gold-plated connector with cotton-wool swab, about every 10 times ejection of a cassette. **[b]**

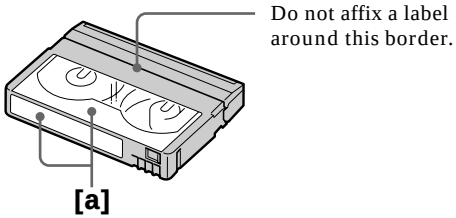


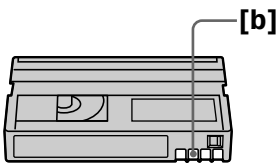

# About the “InfoLITHIUM” battery pack

## What is the “InfoLITHIUM” battery pack?

The “InfoLITHIUM” battery pack is a lithium-ion battery pack that has functions for communicating information related to operating conditions between the battery pack and your camcorder or an AC power adaptor.
The “InfoLITHIUM” battery pack calculates the power consumption according to the operating conditions of your camcorder, and displays the remaining battery time in minutes.

## Charging the battery pack

- Be sure to charge the battery pack before you start using your camcorder.
- We recommend charging the battery pack in an ambient temperature of between 10 °C to 30 °C (50 °F to 86 °F) until FULL appears in the display window, indicating that the battery pack is fully charged. If you charge the battery pack outside of this temperature range, you may not be able to efficiently charge the battery pack.
- After charging is completed, either disconnect the AC power adaptor from the DC IN jack on your camcorder or remove the battery pack.

## Effective use of the battery pack

- Battery performance decreases in low-temperature surroundings. So, the time that the battery pack can be used becomes shorter. We recommend the following to use the battery pack longer:
  – Put the battery pack in a pocket close to your body to warm it up, and insert it in your camcorder immediately before you start taking shots.
  – Use the large capacity battery pack (NP-FM50/FM70/FM90/FM91, optional).
- Frequently using the LCD panel or frequently operating playback, fast forward or rewind wears out the battery pack faster. We recommend using the large capacity battery pack (NP-FM50/FM70/FM90/FM91, optional).
- Be certain to turn the POWER switch to OFF (CHG) when not taking shots or playing back on your camcorder.
- Have spare battery packs handy for two or three times the expected recording time, and make a trial recording before the actual recording.
- Do not expose the battery pack to water. The battery pack is not water-resistant.

## Remaining battery time indicator

- If the power may go off although the remaining battery time indicator indicates that the battery pack has enough power to operate, charge the battery pack fully again so that the indication on the remaining battery time indicator is correct. Note, however, that the correct battery indication sometimes will not be restored if it is used in high temperatures for a long time or left in a fully charged state, or the battery pack is frequently used. Regard the remaining battery time indication as the approximate shooting time.
- The ⌂ mark indicating there is little remaining battery time sometimes flashes depending on the operating conditions or ambient temperature and environment even if the remaining battery time is about five to ten minutes.

## How to store the battery pack

- Even if the battery pack is not used for a long time, store it in a dry, cool place after fully charging it once per year and then using the battery pack up on your camcorder. This is to maintain the battery pack's functions.
- To use the battery pack up on your camcorder, leave your camcorder in the shooting mode until the power goes off without a cassette inserted.

### Battery life

- The battery life is limited. Battery capacity drops little by little as you use it more and more, and as time passes. When the available battery time is shortened considerably, a probable cause is that the battery pack has reached the end of its life. Please buy a new battery pack.
- The battery life varies according to how it is stored and operating conditions and environment for each battery pack.

# About i.LINK

The DV jack on this unit is an i.LINK-compliant DV input/output jack. This section describes the i.LINK standard and its features.

### What is i.LINK?

i.LINK is a digital serial interface for handling digital video, digital audio and other data in two directions between equipment having the i.LINK jack, and for controlling other equipment.
i.LINK-compatible equipment can be connected by a single i.LINK cable. Possible applications are operations and data transactions with various digital AV equipment.
When two or more i.LINK-compatible equipment are connected to this unit in a daisy chain, operations and data transactions are possible with not only the equipment that this unit is connected to but also with other devices via the directly connected equipment.
Note, however, that the method of operation sometimes varies according to the characteristics and specifications of the equipment to be connected, and that operations and data transactions are sometimes not possible on some connected equipment.

---

**Note**

Normally, only one piece of equipment can be connected to this unit by the i.LINK cable (DV connecting cable). When connecting this unit to i.LINK-compatible equipment having two or more i.LINK jacks (DV jacks), refer to the instruction manual of the equipment to be connected.

## About the Name "i.LINK"

i.LINK is a more familiar term for IEEE 1394 data transport bus proposed by SONY, and is a trademark approved by many corporations.
IEEE 1394 is an international standard standardized by the Institute of Electrical and Electronic Engineers.

## i.LINK Baud rate

i.LINK's maximum baud rate varies according to the equipment. Three maximum baud rates are defined:

S100 (approx. 100Mbps*)
S200 (approx. 200Mbps)
S400 (approx. 400Mbps)

The baud rate is listed under "Specifications" in the instruction manual of each equipment. It is also indicated near the i.LINK jack on some equipment.
The maximum baud rate of equipment on which it is not indicated such as this unit is "S100".
When units are connected to equipment having a different maximum baud rate, the baud rate sometimes differs from the indicated baud rate.

***What is Mbps?**

Mbps stands for megabits per second, or the amount of data that can be sent or received in one second. For example, a baud rate of 100Mbps means that 100 megabits of data can be sent in one second.

# About i.LINK

## i.LINK functions on this unit

For details on how to dub when this unit is connected to other video equipment having DV jacks, see page 67, 81.
This unit can also be connected to other i.LINK (DV) compatible equipment made by SONY (e.g. VAIO series personal computer) other than video equipment.
Before connecting this unit to a personal computer, make sure that application software supported by this unit is already installed on the personal computer.
For details on precautions when connecting this unit, also refer to the instruction manuals for the equipment to be connected.

## Required i.LINK Cable

Use the Sony i.LINK 4-pin-to-4-pin cable (during DV dubbing).

i.LINK and i are trademarks.

# Using your camcorder abroad

## Using your camcorder abroad

You can use your camcorder in any country or area with the AC power adaptor supplied with your camcorder within 100 V to 240 V AC, 50/60 Hz.

When charging the battery pack, use a commercially available AC plug adaptor **[a]**, if necessary, depending on the design of the wall outlet **[b]**.

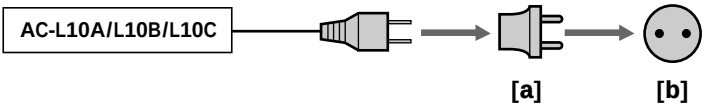


Your camcorder is an NTSC system based camcorder. If you want to view the playback picture on a TV, it must be an NTSC system based TV with the AUDIO/VIDEO input jack.
The following shows TV color systems used overseas.

**NTSC system**
Bahama Islands, Bolivia, Canada, Central America, Chile, Colombia, Ecuador, Jamaica, Japan, Korea, Mexico, Peru, Surinam, Taiwan, the Philippines, the U.S.A., Venezuela, etc.

**PAL system**
Australia, Austria, Belgium, China, Czech Republic, Denmark, Finland, Germany, Great Britain, Holland, Hong Kong, Italy, Kuwait, Malaysia, New Zealand, Norway, Portugal, Singapore, Slovak Republic, Spain, Sweden, Switzerland, Thailand, etc.

**PAL-M system**
Brazil

**PAL-N system**
Argentina, Paraguay, Uruguay

**SECAM system**
Bulgaria, France, Guyana, Hungary, Iran, Iraq, Monaco, Poland, Russia, Ukraine, etc.

## Simple setting of clock by time difference

You can easily set the clock to the local time by setting a time difference. Select WORLD TIME in the menu settings. See page 102 for more information.

# Maintenance information and precautions

## Moisture condensation

If your camcorder is brought directly from a cold place to a warm place, moisture may condense inside your camcorder, on the surface of the tape, or on the lens. In this condition, the tape may stick to the head drum and be damaged or your camcorder may not operate correctly. If there is moisture inside your camcorder, the beep sounds and the 💧 indicator flashes. When the ⏏ indicator flashes at the same time, the cassette is inserted in your camcorder. If moisture condenses on the lens, the indicator will not appear.

### If moisture condensation occurred

None of the functions except cassette ejection will work. Eject the cassette, turn off your camcorder, and leave it for about one hour with the cassette compartment open. Your camcorder can be used again if the 💧 indicator does not appear when the power is turned on again.

---

#### Note on moisture condensation

Moisture may condense when you bring your camcorder from a cold place into a warm place (or vice versa) or when you use your camcorder in a hot place as follows:

- You bring your camcorder from a ski slope into a place warmed up by a heating device.
- You bring your camcorder from an air-conditioned car or room into a hot place outside.
- You use your camcorder after a squall or a shower.
- You use your camcorder in a high temperature and humidity place.

#### How to prevent moisture condensation

When you bring your camcorder from a cold place into a warm place, put your camcorder in a plastic bag and tightly seal it. Remove the bag when the air temperature inside the plastic bag has reached the surrounding temperature (after about one hour).

## Maintenance information

### Cleaning the video head

To ensure normal recording and clear pictures, clean the video heads. The video head may be dirty when:

- mosaic-pattern noise appears on the playback picture.
- playback pictures do not move.
- playback pictures do not appear.
- the ⊗ indicator and "CLEANING CASSETTE" message appear one after another or the ⊗ indicator flashes on the screen.

If the above problem, **[a]**, **[b]** or **[c]** occurs, clean the video heads for 10 seconds with the Sony DVM-12CLD cleaning cassette (optional). Check the picture and if the above problem persists, repeat cleaning.

**[a]**

**[b]**

**[c]**

If the video heads gets dirtier, the entire screen becomes blue **[c]**.

### Cleaning the LCD screen

If fingerprints or dust make the LCD screen dirty, we recommend using a LCD Cleaning Kit (optional) to clean the LCD screen.

## Charging the built-in rechargeable battery in your camcorder

Your camcorder is supplied with a built-in rechargeable battry battery installed so as to retain the date and time, etc., regardless of the setting of the POWER switch. The built-in rechargeable battery is always charged as long as you are using your camcorder. The battery, however, will get discharged gradually if you do not use your camcorder. It will be completely discharged in about 4 months if you do not use your camcorder at all. Even if the built-in rechargeable battery is not charged, it will not affect the camcorder operation. To retain the date and time, etc., charge the battery if the battery is discharged.

**Charging the built-in rechargeable battery:**

- Connect your camcorder to wall outlet using the AC power adaptor supplied with your camcorder, and leave your camcorder with the POWER switch turned off for more than 24 hours.
- Or install the fully charged battery pack in your camcorder, and leave your camcorder with the POWER switch turned off for more than 24 hours.

## Precautions

### Camcorder operation

- Operate your camcorder on 7.2 V (battery pack) or 8.4 V (AC power adaptor).
- For DC or AC operation, use the accessories recommended in this operating instructions.
- If any solid object or liquid get inside the casing, unplug your camcorder and have it checked by a Sony dealer before operating it any further.
- Avoid rough handling or mechanical shock. Be particularly careful of the lens.
- Keep the POWER switch set to OFF (CHG) when you are not using your camcorder.
- Do not wrap your camcorder with a towel, for example, and operate it. Doing so might cause heat to build up inside.
- Keep your camcorder away from strong magnetic fields or mechanical vibration.
- Do not touch the LCD screen with your fingers or a sharp-pointed object.
- If your camcorder is used in a cold place, a residual image may appear on the LCD screen. This is not a malfunction.
- While using your camcorder, the back of the LCD screen may heat up. This is not a malfunction.

### On handling tapes

- Do not insert anything into the small holes on the rear of the cassette. These holes are used to sense the type and thickness of the tape and if the recording tab is in or out.
- Do not open the tape protect cover or touch the tape.
- Avoid touching or damaging the terminals. To remove dust, clean the terminals with a soft cloth.

### Camcorder care

- Remove the tape, and periodically turn on the power, operate the CAMERA and VCR sections and play back a tape for about three minutes when your camcorder is not to be used for a long time.
- Clean the lens with a soft brush to remove dust. If there are fingerprints on the lens, remove them with a soft cloth.
- Clean the camcorder body with a dry soft cloth, or a soft cloth lightly moistened with a mild detergent solution. Do not use any type of solvent which may damage the finish.
- Do not let sand get into your camcorder. When you use your camcorder on a sandy beach or in a dusty place, protect it from the sand or dust. Sand or dust may cause your camcorder to malfunction, and sometimes this malfunction cannot be repaired.

### AC power adaptor

- Unplug the unit from the wall outlet when you are not using the unit for a long time. To disconnect the power cord, pull it out by the plug. Never pull the power cord itself.
- Do not operate the unit with a damaged cord or if the unit has been dropped or damaged.
- Do not bend the power cord forcibly, or place a heavy object on it. This will damage the cord and may cause fire or electrical shock.
- Prevent metallic objects from coming into contact with the metal parts of the connecting section. If this happens, a short may occur and the unit may be damaged.
- Always keep metal contacts clean.
- Do not disassemble the unit.
- Do not apply mechanical shock or drop the unit.

- While the unit is in use, particularly during charging, keep it away from AM receivers and video equipment. AM receivers and video equipment disturb AM reception and video operation.
- The unit becomes warm during use. This is not a malfunction.
- Do not place the unit in locations that are:
  – Extremely hot or cold
  – Dusty or dirty
  – Very humid
  – Vibrating

## About care and storage of the lens

- Wipe the surface of the lens clean with a soft cloth in the following instances:
  – When there are fingerprints on the lens surface
  – In hot or humid locations
  – When the lens is used in environments susceptible to salt such as the seaside
- Store the lens in a well-ventilated location subject to little dirt or dust.

To prevent mold from occurring, periodically perform the above.
We recommend turning on and operating the video camera recorder about once per month to keep the video camera recorder in an optimum state for a long time.

## Battery pack

- Use only the specified charger or video equipment with the charging function.
- To prevent accident from a short circuit, do not allow metal objects to come into contact with the battery terminals.
- Keep the battery pack away from fire.
- Never expose the battery pack to temperatures above 60°C (140°F), such as in a car parked in the sun or under direct sunlight.
- Keep the battery pack dry.
- Do not expose the battery pack to any mechanical shock.
- Do not disassemble nor modify the battery pack.
- Attach the battery pack to the video equipment securely.

## Notes on dry batteries

To avoid possible damage from battery leakage or corrosion, observe the following:
- Be sure to insert the batteries with the + – polarities matched to the + – marks.
- Dry batteries are not rechargeable.
- Do not use a combination of new and old batteries.
- Do not use different types of batteries.
- Current flows from batteries when you are not using them for a long time.
- Do not use leaking batteries.

### If batteries are leaking

- Wipe off the liquid in the battery compartment carefully before replacing the batteries.
- If you touch the liquid, wash it off with water.
- If the liquid get into your eyes, wash your eyes with a lot of water and then consult a doctor.

If any problem occurs, unplug your camcorder and contact your nearest Sony dealer.

# Specifications

## Video camera recorder

### System

**Video recording system**
2 rotary heads
Helical scanning system
**Audio recording system**
Rotary heads, PCM system
Quantization: 12 bits (Fs 32 kHz, stereo 1, stereo 2), 16 bits (Fs 48 kHz, stereo)
**Video signal**
NTSC color, EIA standards
**Usable cassette**
Mini DV cassette with the Mini DV mark printed
**Tape speed**
SP: Approx. 18.81 mm/s
LP: Approx. 12.56 mm/s
**Recording/playback time (using cassette DVM60)**
SP: 1 hour
LP: 1.5 hours
**Fastforward/rewind time (using cassette DVM60)**
Approx. 2 min. and 30 seconds
**Viewfinder**
Electric viewfinder (color)
**Image device**
4.5 mm (1/4 type) CCD (Charge Coupled Device)
Approx. 680 000 pixels (Effective: Approx. 340 000 pixels)
**Lens**
Carl Zeiss
Combined power zoom lens
Filter diameter
30 mm (1 3/16 in.)
10× (Optical), 120× (Digital)
**Focal length**
3.3 - 33 mm (5/32 - 1 5/16 in.)
When converted to a 35 mm still camera
Camera/Memory (DCR-TRV17 only) mode:
42 - 420 mm (1 11/16 - 16 5/8 in.)
**Color temperature**
Auto, HOLD (Hold), Indoor (3 200 K), Outdoor (5 800 K)
**Minimum illumination**
5 lx (lux) (F 1.7)
0 lx (lux) (in the NightShot mode)*
* Objects unable to be seen due to the dark can be shot with infrared lighting.

### Input/Output connectors

**S video input/output**
4-pin mini DIN
Luminance signal: 1 Vp-p, 75 Ω (ohms), unbalanced
Chrominance signal: 0.286 Vp-p, 75 Ω (ohms)
**Audio/Video input/output**
AV MINI JACK, 1 Vp-p, 75 Ω (ohms), unbalanced, sync negative
327 mV, (at output impedance more than 47 kΩ (kilohms))
Output impedance with less than 2.2 kΩ (kilohms)/Stereo minijack (ø 3.5mm)
Input impedance more than 47 kΩ (kilohms)
**DV input/output**
4-pin connector
**Headphone jack**
Stereo minijack (ø 3.5 mm)
**USB jack** (DCR-TRV17 only)
mini-B
**LANC jack**
Stereo mini-minijack (ø 2.5 mm)
**MIC jack**
Stereo minijack (ø 3.5 mm)

### LCD screen

**Picture**
DCR-TRV15:
6.2 cm (2.5 type)
50.3 × 37.4 mm (2 × 1 1/2 in.)
DCR-TRV17:
8.8 cm (3.5 type)
72.4 × 50.4 mm (2 7/8 × 2 in.)
**Total dot number**
123 200 (560 × 220)

### General

**Power requirements**
7.2 V (battery pack)
8.4 V (AC power adaptor)
**Average power consumption (when using the battery pack)**
During camera recording using LCD
DCR-TRV15: 3.3 W
DCR-TRV17: 3.7 W
Viewfinder
DCR-TRV15: 2.5 W
DCR-TRV17: 2.6 W
**Operating temperature**
0 °C to 40 °C (32 °F to 104 °F)
**Storage temperature**
–20 °C to +60 °C
(–4 °F to +140 °F)
**Dimensions (Approx.)**
74 × 95 × 175 mm
(2 7/8 × 3 3/4 × 6 1/2 in.)
(w/h/d)
**Mass (approx.)**
DCR-TRV15: 610 g (1 lb 5 oz)
DCR-TRV17: 650 g (1 lb 6 oz)
main unit only
DCR-TRV15: 700 g (1 lb 8 oz)
DCR-TRV17: 740 g (1 lb 10 oz)
including the battery pack NP-FM30, cassette DVM60, lens cap
**Supplied accessories**
See page 5.

## AC power adaptor

**Power requirements**
100 - 240 V AC, 50/60 Hz
**Power consumption**
23 W
**Output voltage**
DC OUT: 8.4 V, 1.5 A in the operating mode
**Operating temperature**
0 °C to 40 °C (32 °F to 104 °F)
**Storage temperature**
–20 °C to +60 °C (–4 °F to +140 °F)
**Dimensions (approx.)**
125 × 39 × 62 mm
(5 × 1 9/16 × 2 1/2 in.) (w/h/d)
excluding projecting parts
**Mass (approx.)**
280 g (9.8 oz)
excluding mains lead
**Cord length (approx.)**
Power cord: 2 m (6.6 feet)
Connecting cord: 1.6 m (5.2 feet)

## Battery pack

**Maximum output voltage**
DC 8.4 V
**Output voltage**
DC 7.2 V
**Capacity**
5.0 Wh (700 mAh)
**Dimensions (approx.)**
38.2 × 20.5 × 55.6 mm
(1 9/16 × 13/16 × 2 1/4 in.)
(w/h/d)
**Mass (approx.)**
65 g (2.3 oz)
**Type**
Lithium ion

## "Memory Stick" (DCR-TRV17 only)

**Memory**
Flash memory
4MB: MSA-4A
**Operating voltage**
2.7-3.6V
**Power consumption**
Approx. 45mA in the operating mode
Approx. 130µA in the standby mode
**Dimensions (approx.)**
50 × 2.8 × 21.5 mm
(2 × 1/8 × 7/8 in.) (w/h/d)
**Mass (approx.)**
4 g (0.14 oz)

Design and specifications are subject to change without notice.

# Identifying the parts and controls

## Camcorder

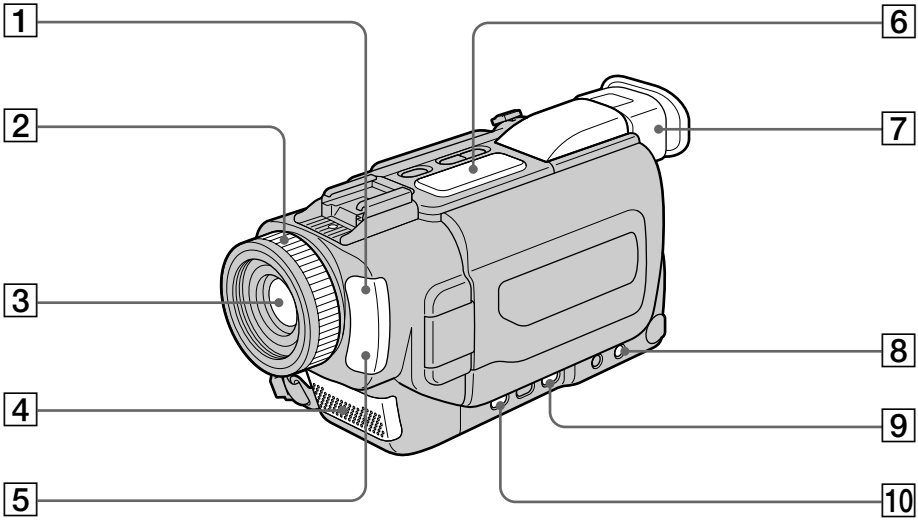


1 **Remote sensor**

2 **Focus ring** (p. 53)

3 **Lens**

4 **Microphone**

5 **Infrared rays emitter** (p. 27, 36, 71)

6 **Display window** (p. 13)

7 **Viewfinder** (p. 24)

8 **MENU button** (p. 96)

9 **BACK LIGHT button** (p. 26)

10 **Focus button** (p. 53)



---

This mark indicates that this product is a genuine accessory for Sony video products.
When purchasing Sony video products, Sony recommends that you purchase accessories with this "GENUINE VIDEO ACCESSORIES" mark.

**Note on the Carl Zeiss lens**

Your camcorder is equipped with a Carl Zeiss lens which can reproduce a fine image.
The lens for your camcorder was developed jointly by Carl Zeiss, in Germany, and Sony Corporation. It adopts the MTF* measurement system for video camera and offers a quality as the Carl Zeiss lens.

* MTF is an abbreviation of Modulation Transfer Function.
The value number indicates the amount of light of a subject penetrating into the lens.

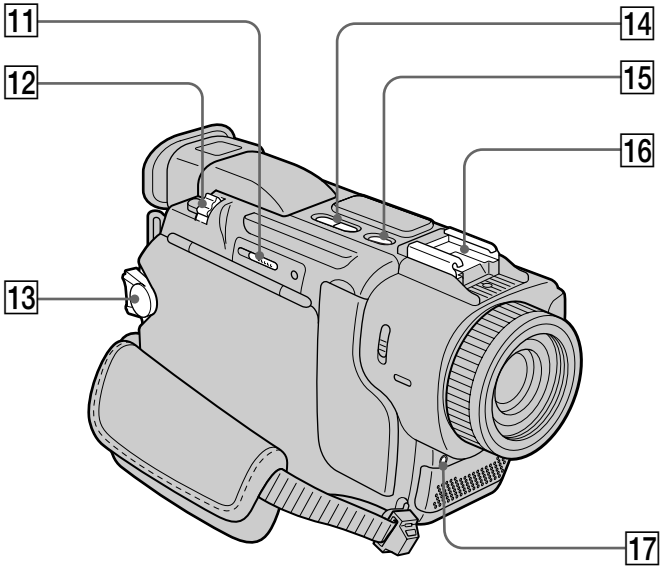


11 ⟵ **MEMORY EJECT Lever** (DCR-TRV17 only) (p. 105)

12 **Power zoom lever** (p. 24)

13 **POWER switch** (p. 13)

14 **EDITSEARCH button** (p. 30)

15 **SUPER LASER LINK button** (p. 36)

16 **Intelligent accessory shoe** (p. 85)

17 **Camera recording lamp** (p. 21)

Intelligent Accessory Shoe

**Notes on the intelligent accessory shoe**

- The intelligent accessory shoe supplies power to optional accessories such as a video light, microphone or printer (DCR-TRV17 only) .
- The intelligent accessory shoe is linked to the POWER switch, allowing you to turn the power supplied by the shoe on and off. Refer to the operating instructions of the accessory for further information.
- The intelligent accessory shoe has a safety device for fixing the installed accessory securely. To connect an accessory, press down and push it to the end, and then tighten the screw.
- To remove an accessory, loosen the screw, and then press down and pull out the accessory.

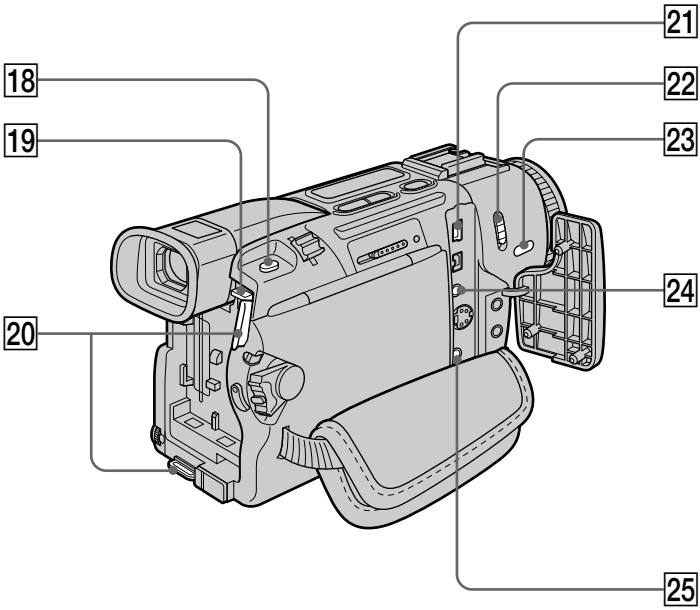


18 **PHOTO button** (p. 38, 112)

19 **BATT release button** (p. 12)

20 **Hooks for sholder strap**

21 **(USB) jack** (DCR-TRV17 only) (p. 135)

22 **NIGHTSHOT switch** (p. 27)

23 **SUPER NIGHTSHOT button** (p. 27)

24 **(LANC) control jack**
LANC stands for Local Application Control Bus System. The control jack is used for controlling the tape transport of video equipment and other peripherals connected to the video equipment. This jack has the same function as the jack indicated as CONTROL L.

25 **AUDIO/VIDEO ID-2 jack** (p. 35, 40, 66, 118, 122)

**Attaching the shoulder strap**

Attach the shoulder strap supplied with your camcorder to the hooks for the shoulder strap.

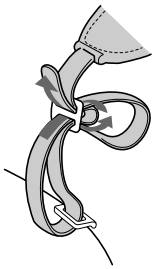

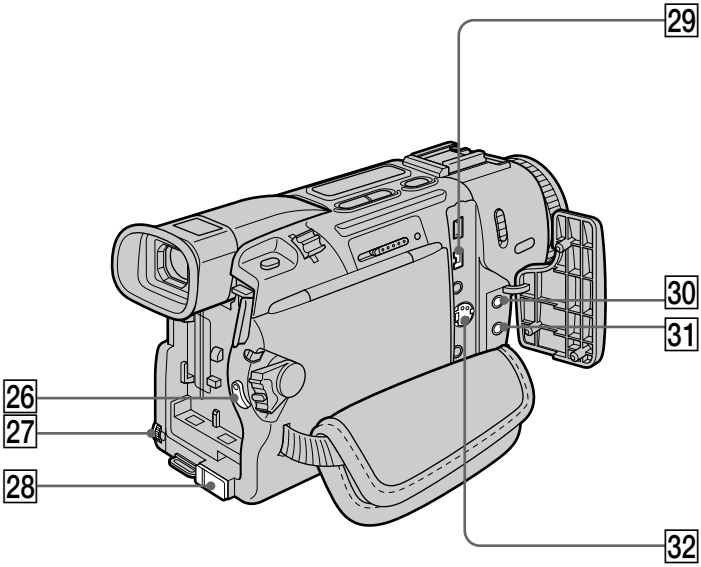


26 **START/STOP button** (p. 21)

27 **SEL/PUSH EXEC dial** (p. 96)

28 **DC IN jack** (p. 17)

29 **i DV IN/OUT jack** (p. 67, 119, 123)

30 **(headphones) jack**
When you use headphones, the speaker on your camcorder is silent.

31 **MIC jack (PLUG IN POWER)**
Connect an external microphone (optional). This jack also accepts a "plug-in-power" microphone.

32 **S VIDEO jack** (p. 35, 40, 66, 118, 122)

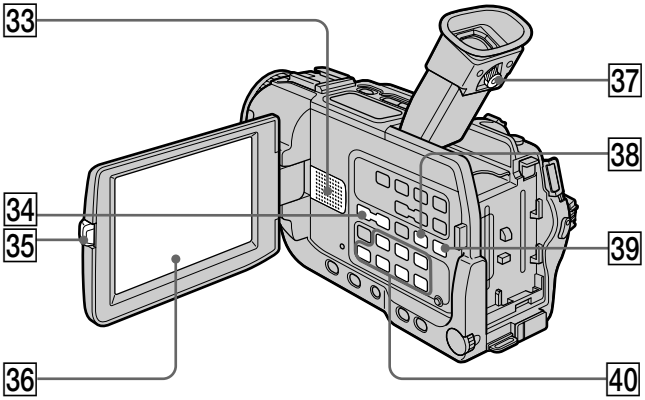


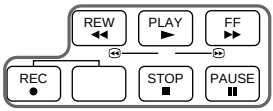


33 **Speaker**

34 **VOLUME buttons** (p. 31)

35 **OPEN button** (p. 21)

36 **LCD screen** (p. 22)

37 **Viewfinder lens adjustment lever** (p. 24)

38 **END SEARCH button** (p. 30)

39 **PB ZOOM button** (p. 59, 140)

40 **Video control buttons** (p. 33)
- ■ STOP (stop)
- ◀◀ REW (rewind)
- ▶ PLAY (playback)
- ▶▶ FF (fastforward)
- ❚❚ PAUSE (pause)
- ● REC (record)

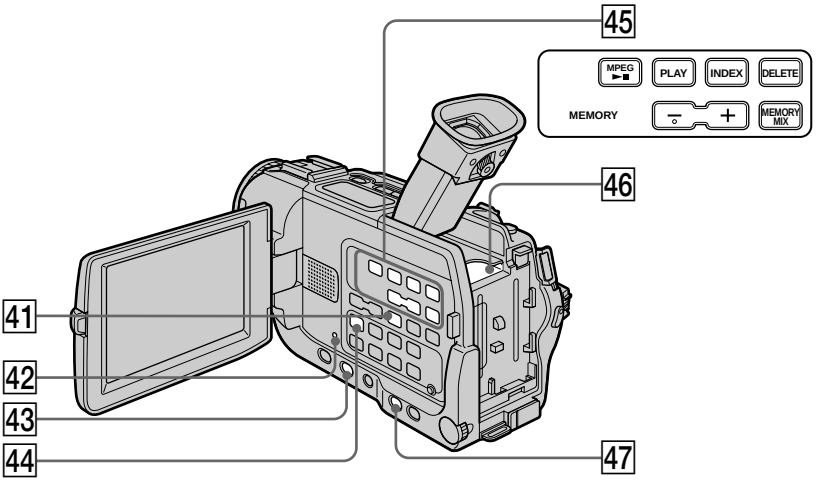


41 **DISPLAY button** (p. 32)

42 **RESET button** (p. 154)

43 **FADER button** (p. 44)

44 **AUDIO DUB button** (p. 87)

45 **MEMORY operation buttons** (DCR-TRV17 only)
MPEG ►II button (p. 132)
MEMORY PLAY button (p. 129)
MEMORY INDEX button (p. 131)
MEMORY DELETE button (p. 144)
MEMORY +/– buttons (p. 129)
MEMORY MIX button (p. 125)

46 **"Memory Stick" slot** (DCR-TRV17 only)

47 **EXPOSURE button** (p. 52)

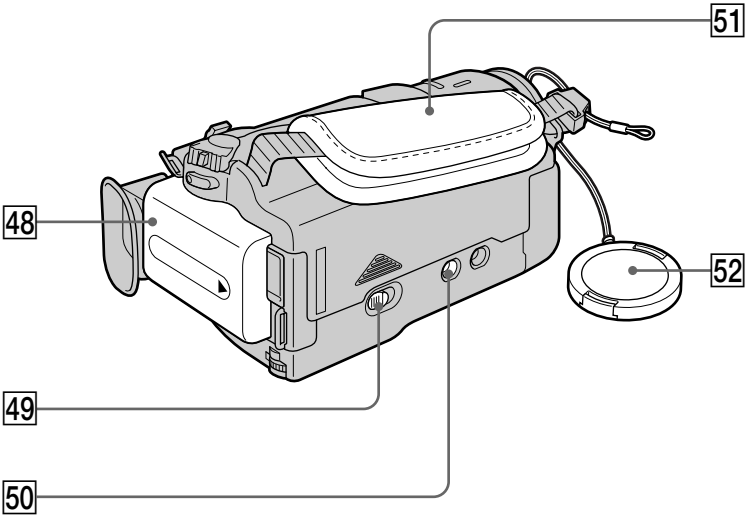


48 **Battery pack** (p. 13)

49 **OPEN/ EJECT lever** (p. 20)

50 **Tripod receptacle**
Make sure that the length of the tripod screw is less than 6.5 mm (9/32 inch). Otherwise, you cannot attach the tripod securely and the screw may damage your camcorder.

51 **Grip strap**

52 **Lens cap** (p. 21)



**Fastening the grip strap**

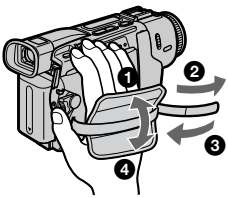


Fasten the grip strap firmly.

## Remote Commander

The buttons that have the same name on the Remote Commander as on your camcorder function identically to the buttons on your camcorder.

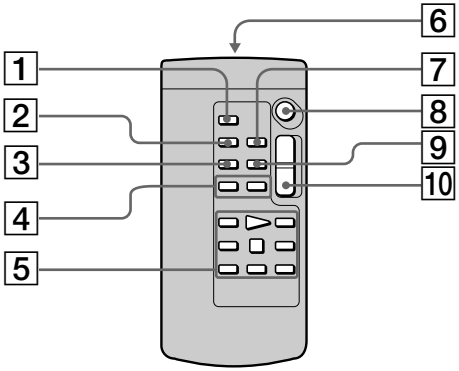


1 **PHOTO button** (p. 38, 112)

2 **DISPLAY button** (p. 32)

3 **SEARCH MODE button** (p. 61, 62, 64)

4 **⏮/⏭ buttons** (p. 61, 62, 64)

5 **Tape transport buttons** (p. 33)

6 **Transmitter**
Point toward the remote sensor to control the camcorder after turning on the camcorder.

7 **ZERO SET MEMORY button** (p. 60, 83)

8 **START/STOP button** (p. 21)

9 **DATA CODE button** (p. 32)

10 **Power zoom button** (p. 24)

### To prepare the Remote Commander

Insert 2 size AA (R6) batteries by matching the + and – polarities on the batteries to the + – marks inside the battery compartment.

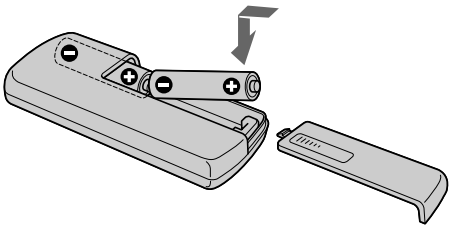

**Notes on the Remote Commander**

- Point the remote sensor away from strong light sources such as direct sunlight or overhead lighting. Otherwise, the Remote Commander may not function properly.
- Your camcorder works in the Commander mode VTR 2. Commander modes 1, 2 and 3 are used to distinguish your camcorder from other Sony VCRs to avoid remote control misoperation. If you use another Sony VCR in the Commander mode VTR 2, we recommend changing the Commander mode or covering the sensor of the VCR with black paper.

## Operation indicators

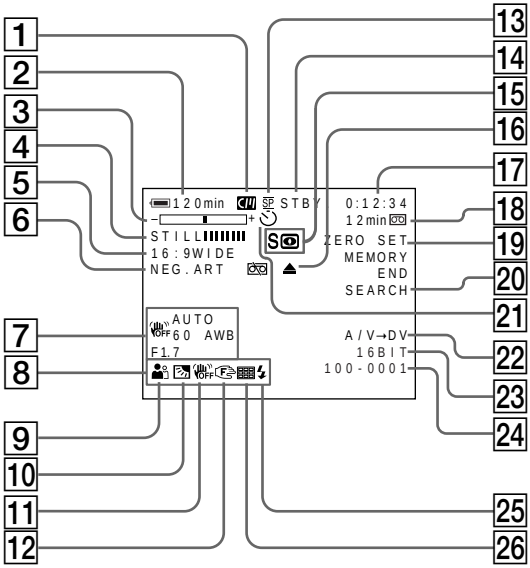


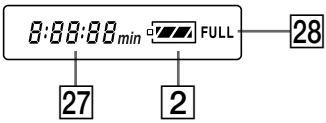


1 **Cassette memory indicator** (p. 25, 158)
2 **Remaining battery time indicator** (p. 25)
3 **Zoom indicator** (p. 25)**/Exposure indicator** (p. 52)**/Data file name indicator** (DCR-TRV17 only) (p. 125)
4 **Digital effect indicator** (p. 47)**/MEMORY MIX indicator** (DCR-TRV17 only) (p. 125)**/FADER indicator** (p. 44)
5 **16:9WIDE indicator** (p. 42)
6 **Picture effect indicator** (p. 45)
7 **Data code indicator** (p. 32)
8 **LCD bright indicator** (p. 23)**/Volume indicator** (p. 31)**/Date indicator** (p. 25)**/Time indicator** (p. 25)
9 **PROGRAM AE indicator** (p. 49)
10 **Backlight indicator** (p. 26)
11 **SteadyShot off indicator** (p. 97)
12 **Manual focus/Infinity indicator** (p. 53)
13 **Recording mode indicator** (p. 25, 101)
14 **STBY/REC indicator** (p. 21)**/Video control mode indicator** (p. 33)**/Image size indicator** (DCR-TRV17 only) (p. 108)**/Image quality mode indicator** (DCR-TRV17 only) (p. 107)
15 **NIGHTSHOT** (p. 27)**/SUPER NIGHTSHOT indicator** (p. 27)
16 **Warning indicators** (p. 156)
17 **Tape counter indicator** (p. 25)**/Time code indicator** (p. 25)**/Self-diagnosis indicator** (p. 155)**/Tape photo indicator** (p. 38)/**Memory photo indicator** (DCR-TRV17 only) (p. 112)**/Image number indicator** (DCR-TRV17 only) (p. 130)
18 **Remaining tape indicator** (p. 25)**/Memory playback indicator** (DCR-TRV17 only) (p. 130)
19 **ZERO SET MEMORY indicator** (p. 60)
20 **END SEARCH indicator** (p. 30)
21 **Self-timer indicator** (p. 28)
22 **A/V → DV indicator** (p. 79)**/DV IN indicator** (p. 82)
23 **Audio mode indicator** (p. 101)
24 **Data file name indicator*** (DCR-TRV17 only) (p. 125)**/Time indicator** (p. 25)
*This indicator appears when the MEMORY MIX functions work.
25 **Video flash ready indicator**
This indicator appears when you use the video flash light (optional).
26 **Continuous mode indicator** (DCR-TRV17 only) (p. 114)
27 **Remaining battery time indicator** (p. 25)**/Tape counter** (p. 25)**/Memory counter** (DCR-TRV17 only)**/Time code indicator** (p. 25)**/Self-diagnosis indicator** (p. 155)
28 **FULL charge indicator** (p. 13)

# Index

## A, B


AC power adaptor ..... 13
Adjusting viewfinder ..... 24
Audio dubbing ..... 85
AUDIO MIX ..... 98
Audio mode ..... 101
AUTO SHUTTER ..... 97
A / V connecting cable
..... 35, 40, 66, 118, 122
BACK LIGHT ..... 26
Battery pack ..... 12
Beep ..... 102
BOUNCE ..... 43


## C, D


Camera chromakey ..... 124
Cassette memory ..... 10, 158
Charging battery ..... 13
Charging built-in
rechargeable battery ..... 166
Clock set ..... 18
Continuous ..... 114
Cut recording ..... 56
Data code ..... 32
Date search ..... 62
DEMO ..... 101
DIGITAL EFFECT ..... 46, 58
Digital program editing ..... 68
DISPLAY ..... 32
DOT ..... 43
Dual sound track tape ..... 159
DV connecting cable
..... 67, 119, 123


## E


EDITSEARCH ..... 30
END SEARCH ..... 30, 34
Exposure ..... 52


## F, G, H


FADER ..... 43
Fade in / out ..... 43
FLASH MOTION ..... 46
FOCUS ..... 53
Format ..... 100
Full charge ..... 13
Grip strap ..... 177
Headphone jack ..... 174
Heads ..... 166
HiFi SOUND ..... 98


## I, J, K, L


i.LINK ..... 162
Image protection ..... 143
Image quality mode ..... 106
INDEX (Multiple) display ... 131
“InfoLITHIUM” battery ..... 160
Infrared rays emitter ... 27, 36, 71
Insert editing ..... 83
Intelligent accessory shoe ..... 85
Interval recording ..... 54
JPEG ..... 103
Labeling a cassette ..... 94
(LANC) ..... 173
LUMINANCEKEY ..... 46


## M, N


Main sound ..... 159
Manual focus ..... 53
Memory chromakey ..... 124
Memory luminancekey ..... 124
MEMORY MIX ..... 124
Memory PB ZOOM ..... 140
Memory photo recording
..... 112
“Memory Stick” ..... 103
Menu settings ..... 96
Memory overlap ..... 124
M.FADER ..... 43
Mirror mode ..... 22
Moisture condensation ..... 165
MONOTONE ..... 43
MPEG ..... 103
MPEG movie recording ..... 120
NIGHTSHOT ..... 27
Normal charge ..... 13
NTSC system ..... 164


## O, P, Q


OLD MOVIE ..... 46
Operation indicators ..... 179
OVERLAP ..... 43
Photo scan ..... 65
Photo search ..... 64
PICTURE EFFECT ..... 45, 57
Picture search ..... 33
Playback pause ..... 33
Power zoom ..... 24
Print mark ..... 146
PROGRAM AE ..... 49


## R


Rec review ..... 30
Recording time ..... 15
Remaining battery time
indicator ..... 25
Remaining tape indicator ..... 25
Remote commander ..... 178
Remote sensor ..... 171
RESET ..... 154


## S


Self-diagnosis display ..... 155
Self-timer recording ..... 28
Shoulder strap ..... 173
Signal convert function ..... 79
Skip scan ..... 33
Slide show ..... 142
Slow playback ..... 33
SLOW SHUTTER ..... 46
STEADYSHOT ..... 97
Stereo tape ..... 159
STILL ..... 46
Sub sound ..... 159
SUPER LASER LINK ..... 36
SUPER NIGHTSHOT ..... 27
S VIDEO jack
..... 35, 40, 66, 80, 118, 122


## T, U, V


Tape counter ..... 25, 60
Tape PB ZOOM ..... 59
Tape photo recording ..... 38
Telephoto ..... 24
Time code ..... 25
Title ..... 89, 92
Title search ..... 61
TRAIL ..... 46
Transition ..... 22
TV color systems ..... 164
USB jack ..... 135


## W, X, Y, Z


Warning indicators ..... 156
White balance ..... 41
Wide-angle ..... 24
Wide mode ..... 42
WIPE ..... 43
WORLD TIME ..... 164
Write-protect tab ..... 103
Zero set memory ..... 60, 83
Zoom ..... 24



Sony online

http://www.world.sony.com/

Printed on recycled paper

Sony Corporation Printed in Japan

3 0 6 7 4 2 5 1 1