SONY

3-800-561-21 (1)

Digital Video Camera Recorder

Mini DV Digital Video Cassette

Operation Manual

Before operating the unit, please read this manual thoroughly, and retain it for future reference.

Owner's Record

The model and serial numbers are located on the bottom. Record the serial number in the space provided below. Refer to these numbers whenever you call upon your Sony dealer regarding this product.

Model No. **DCR-VX700** Model No. **AC-V515**

Serial No. _____ Serial No. _____

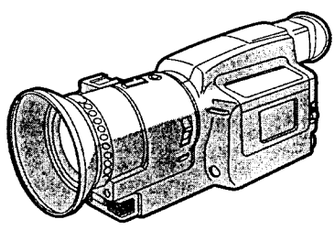

Digital Handycam

DCR-VX700

© 1995 by Sony Corporation

Welcome to digital video

Congratulations on your purchase of this Sony Digital Handycam® camcorder. With your Handycam, you can capture life's precious moments with superior picture and sound quality. Your Handycam is loaded with advanced features, but at the same time it is very easy to use. You will soon be producing home video that you can enjoy for years to come.

WARNING

To prevent fire or shock hazard, do not expose the unit to rain or moisture.

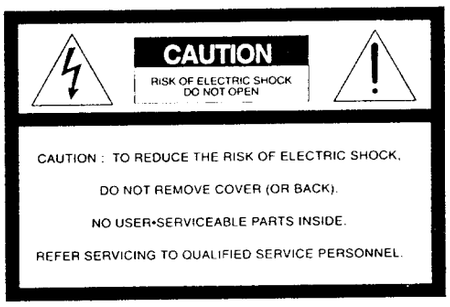

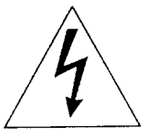

This symbol is intended to alert the user to the presence of uninsulated "dangerous voltage" within the product's enclosure that may be of sufficient magnitude to constitute a risk of electric shock to persons.

This symbol is intended to alert the user to the presence of important operating and maintenance (servicing) instructions in the literature accompanying the appliance.

DISPOSAL OF LITHIUM ION BATTERY.

LITHIUM ION BATTERY.
DISPOSE OF PROPERLY.

You can return your unwanted lithium ion batteries to your nearest Sony Service Center or Factory Service Center.

Note: In some areas the disposal of lithium ion batteries in household or business trash may be prohibited.

For the Sony Service Center nearest you call 1-800-222-SONY (United States only).
For the Factory Service Center nearest you call 416-499-SONY (Canada only).

Caution: Do not handle damaged or leaking lithium ion batteries.

For the Customers in the U.S.A.

WARNING

This equipment has been tested and found to comply with the limits for a Class B digital device, pursuant to Part 15 of the FCC Rules. These limits are designed to provide reasonable protection against harmful interference in a residential installation. This equipment generates, uses, and can radiate radio frequency energy and, if not installed and used in accordance with the instructions, may cause harmful interference to radio communications. However, there is no guarantee that interference will not occur in a particular installation. If this equipment does cause harmful interference to radio or television reception, which can be determined by turning the equipment off and on, the user is encouraged to try to correct the interference by one or more of the following measures:

— Reorient or relocate the receiving antenna.
— Increase the separation between the equipment and receiver.
— Connect the equipment into an outlet on a circuit different from that to which the receiver is connected.
— Consult the dealer or an experienced radio/TV technician for help.

Caution

You are cautioned that any changes or modifications not expressly approved in this manual could void your authority to operate this equipment.

The shielded Interface cable recommended in this manual must be used with the equipment in order to comply with the limits for a digital device pursuant to Subpart B of Part 15 of FCC Rules.

For the Customers in CANADA

CAUTION

TO PREVENT ELECTRIC SHOCK, DO NOT USE THIS POLARIZED AC PLUG WITH AN EXTENSION CORD, RECEPTACLE OR OTHER OUTLET UNLESS THE BLADES CAN BE FULLY INSERTED TO PREVENT BLADE EXPOSURE.

Table of Contents

Before You Begin
Notes and Precautions 4
Checking Supplied Accessories 5

Getting Started
Charging and Inserting the Battery Pack 6
Inserting a Cassette 9

Basic Operations
Camera Recording 11
Hints for Better Shooting 14
Checking the Recorded Picture 15
Connections for Playback 16
Playing Back a Tape 17

Advanced Operations
Using Alternate Power Sources 19
Changing the Mode Settings 21
< for Camera Recording >
Fade-in and Fade-out 24
Re-recording a Picture in the Middle of a Recorded Tape 26
Photo Recording 28
Interval Recording 29
Cut Recording 30
< for Automatic/Manual Adjustment >
Enjoying Digital Effect 31
Focusing Manually 32
Using the PROGRAM AE Function 34
Adjusting the Exposure 36
Adjusting the White Balance 38
Releasing the Steady Shot Function 40
< for Playback/Editing >
Searching the Recorded Picture 41
Checking the Information for the Recorded Picture 43
Editing onto Another Tape 44

Additional Information
Replacing the Lithium Battery in the Camcorder 46
Resetting the Date and Time 48
Usable Cassettes 49
Tips for Using the Battery Pack 50
Maintenance Information and Precautions 53
Using Your Camcorder Abroad 56
Trouble Check 57
Specifications 60
Identifying the Parts 61
Warning Indicators 72
Glossary 73
Index 75

As you read through this manual, buttons and settings on the camcorder are shown in capital letters.
e.g. Set the POWER switch to CAMERA.
The beep sound is indicated with ♪ in the illustrations.

Notes and Precautions

Note on TV Color Systems

TV color systems differ from country to country. If you view the playback picture on a TV, you need an NTSC system based TV. When you want to use a PAL M system based TV, you will need an NTSC/PAL M transcoder (as this is an NTSC system based camcorder). Please check the list on page 56 to see the TV color system of your country.

Precaution on Copyright

Television programs, films, video tapes, and other materials may be copyrighted.
Unauthorized recording of such materials may be contrary to the provision of the copyright laws.

Precautions on Camcorder Care

- **Do not let the camcorder get wet. Keep the camcorder from rain or sea water. It may cause a malfunction and sometimes the malfunction cannot be repaired. [a]**
- **Do not let sand get into the camcorder. When you use the camcorder on a sandy beach or dusty place, protect it from the sand or dust. Sand or dust may cause the unit to malfunction and sometimes the malfunction cannot be repaired. [b]**
- Never leave the camcorder under temperatures above 140° F (60 °C), such as in a car parked in the sun or under direct sunlight. **[c]**

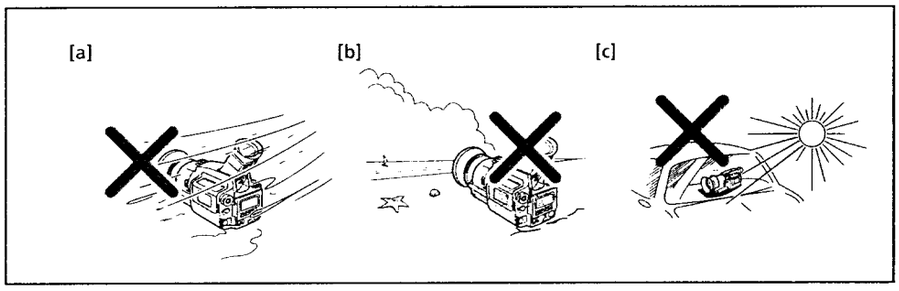

Contents of the recording cannot be compensated if recording or playback is not made due to a malfunction of the camcorder, video tape, etc.

See "Precautions" as well (p. 55).

Checking Supplied Accessories

Check that the following accessories are supplied with your camcorder.

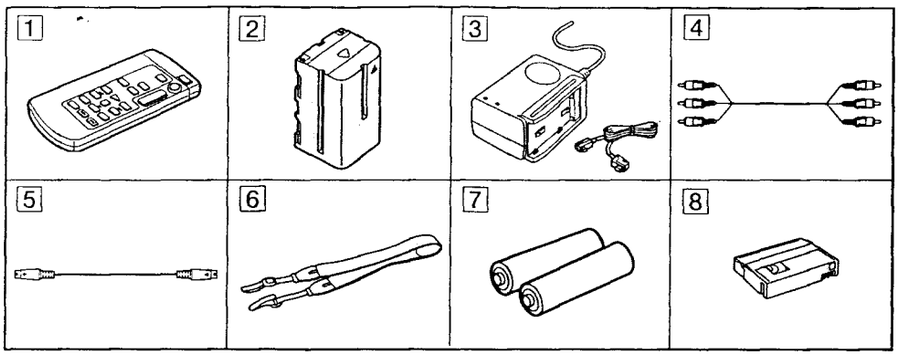

1 Wireless Remote Commander (1) (p. 66)

2 NP-720 Battery Pack (1) (p. 6)

3 AC-V515 AC power adaptor and DK-715 connecting cord (1) (p. 6, 20)

4 A/V connecting cable (1) (p. 16)

5 S video connecting cable (1) (p. 16)

6 Shoulder strap (1) (p. 65)

7 Size AA (R6) batteries for Remote Commander (2) (p. 67)

8 "mini DV" cassette (1) (p. 9)

Charging and Inserting the Battery Pack

Before using your camcorder, you first need to charge and install the battery pack. To charge the battery pack, use the supplied AC power adaptor.

Charging the Battery Pack

Charge the battery pack on a flat place without vibration.
(1) Connect the AC power adaptor to a wall outlet.
(2) Align the surface of the battery pack indicated by the ▶ mark with the edge of the terminal shutter of the AC power adaptor. Then fit and slide the battery pack in the direction of the arrow.
The CHARGE lamp (orange) lights up. Charging begins.
When charging is completed, the CHARGE lamp goes out. Unplug the unit from the wall outlet, then remove the battery pack and install it on the camcorder.

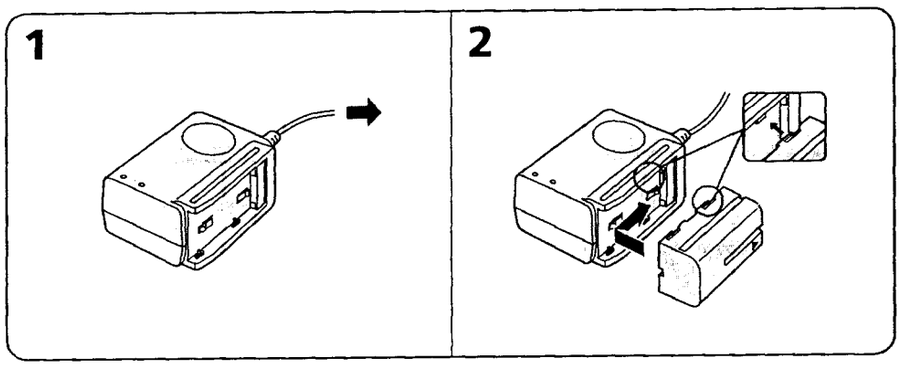

Charging Time

Battery Pack	Charging time*
NP-720 (supplied)	190

* Approximate minutes to charge an empty pack using the supplied AC power adaptor (Lower temperatures require a longer charging time.)

Battery Life

Battery Pack	Typical recording time*	Continuous using time**
NP-720 (supplied)	55	110

* Approximate minutes when recording while you repeat recording start/stop, zooming and turning the power on/off. The actual battery life may be shorter.
** Approximate continuous recording and playing back time indoors.

Removing the Battery Pack

Slide the battery pack in the direction of the arrow.

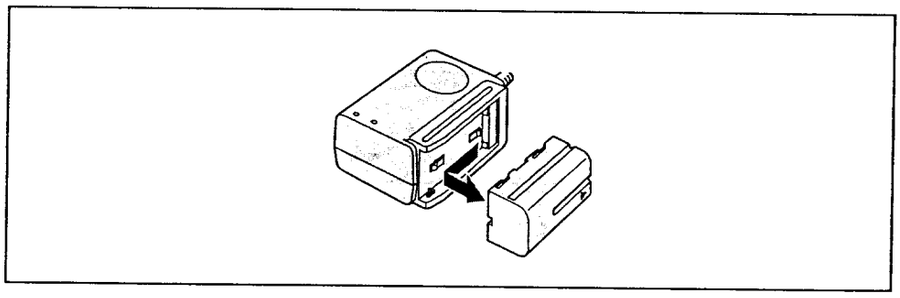

Notes on charging the battery pack

- The POWER lamp will remain lit for a while even if the battery pack is removed and the power cord is unplugged after charging the battery pack. This is normal.
- If the POWER lamp does not light, disconnect the power cord. After about one minute, reconnect the power cord again.
- You cannot operate the camcorder using the AC power adaptor while charging the battery pack.
- When a fully charged battery pack is installed, the CHARGE lamps will light once, then go out.

Inserting the Battery Pack

(1) Slide OPEN and open the battery cover.
(2) Insert the battery pack until it is hooked by the RELEASE knob.
(3) Close the cover.

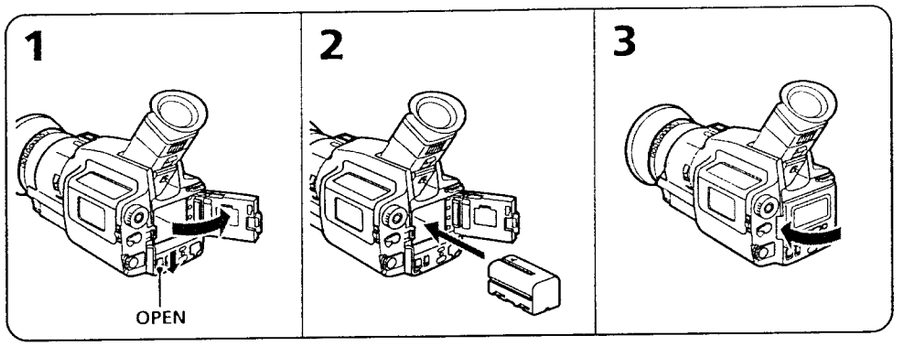

To Remove the Battery Pack

Slide the RELEASE knob leftward.

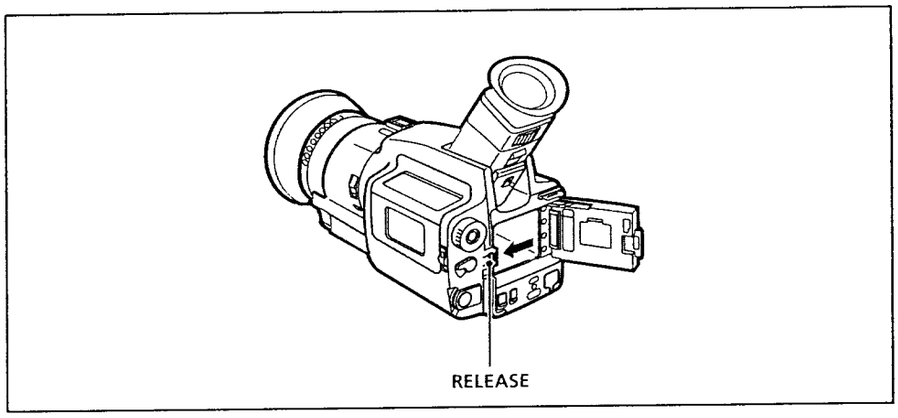

Note on battery pack
You cannot use NP-520 or NP-500H battery pack.

Inserting a Cassette

You can use miniDV cassette with Mini DV logo* only.
Make sure that a power source is inserted.
(1) Slide EJECT. The cassette compartment automatically lifts up and opens.
(2) Insert a cassette (supplied) with the window facing out.
(3) Press the outside of the cassette compartment cover to close the compartment. The cassette compartment automatically retracts.
(4) After the cassette compartment cover has completely retracted, press the upper cassette compartment cover until it clicks.

* C/II and Mini DV are trademarks.

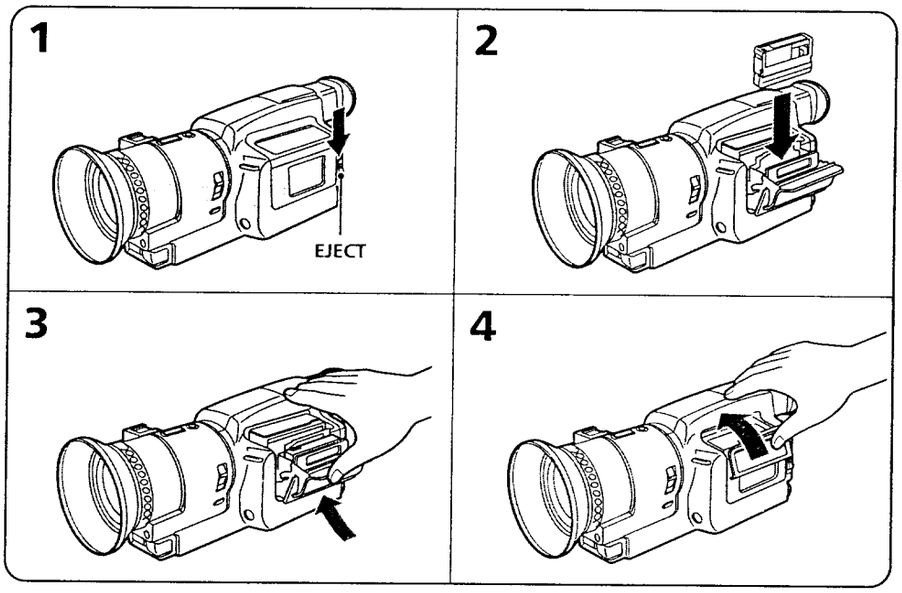

To Eject the Cassette

Slide EJECT. After the cassette compartment opens, take out the cassette.
You cannot eject the cassette while C MEMORY appears in the viewfinder because the camcorder is still writing information to the cassette memory-mounted miniDV cassette (p. 41). In this case, the cassette compartment automatically lifts up and opens after C MEMORY disappears.

To Prevent Accidental Erasure

Slide and open the tab on the cassette to expose the red mark. If you try to record with the red mark exposed, the ⊘ and ⏏ indicators flash in the viewfinder, and you cannot record on the tape. To rerecord on this tape, slide and close the tab to cover the red mark.

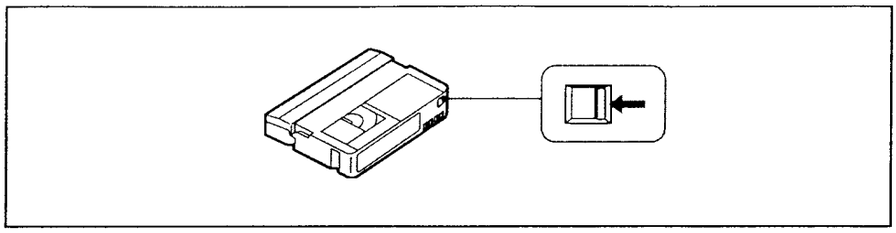

Camera Recording

Make sure that a power source and a cassette are inserted. You can hear the beep sound, indicated with ♪ in the illustrations, which confirms your operation. Before you record one-time events, you may want to make a trial recording to make sure that you are using the camcorder correctly.

(1) Remove the hood cap, and attach it to the grip strap.
(2) While pressing the center button on the POWER switch, set it to CAMERA.
(3) Turn STANDBY up.
(4) Press START/STOP. The camcorder starts recording. The "REC" indicator appears in the viewfinder, and the red lamps on the front and back of the camcorder and in the viewfinder light.

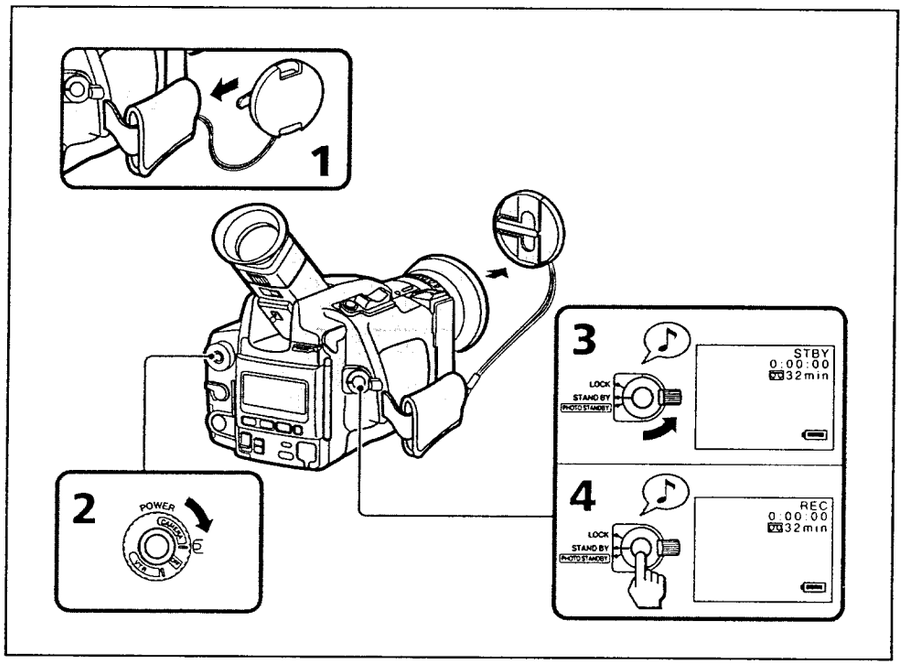

To Stop Recording Momentarily [a]

Press START/STOP again. The "STBY" indicator appears in the viewfinder **(Standby mode).**

To Finish Recording [b]

Press START/STOP to stop recording. Turn STANDBY to LOCK. Turn the POWER switch to OFF. Then, eject the cassette and battery (p. 8, 9).

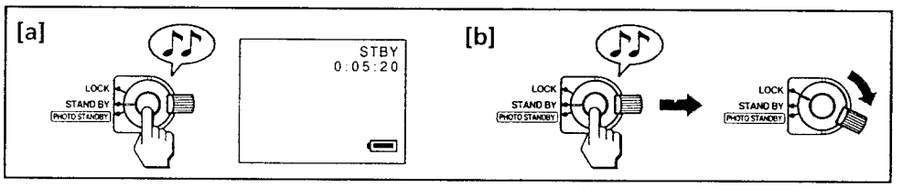

Note on Standby mode

If you leave the camcorder for 5 minutes or more with a cassette inserted in Standby mode, the camcorder goes off automatically. This prevents wearing down the battery and wearing out the tape. To resume Standby mode, turn STANDBY down once and up again. To start recording, press START/STOP.

Notes on the time code

- The time code indicates the recording or playback time, "0:00:00" (hours : minutes : seconds) in CAMERA mode, and "0:00:00:00" (hours : minutes : seconds : frames) in VTR mode. The timde code of this camcorder is the drop-frame mode (p. 74).
- Be sure not to make a blank portion when recording, because you cannot rewrite the time code on the tape if there is a blank portion between pictures.
- If there is a blank portion between pictures, the time code starts from 0.

Note on power sources

Disconnecting the power sources or removing the battery pack during recording or playback may damage the inserted tape. If this happens, restore the power supply again immediately.

To Focus the Viewfinder Lens

If the viewfinder is not in focus at all or when you use the camcorder after someone else has used it, focus the viewfinder lens. Turn the viewfinder lens adjustment ring so that the indicators in the viewfinder come into sharp focus.

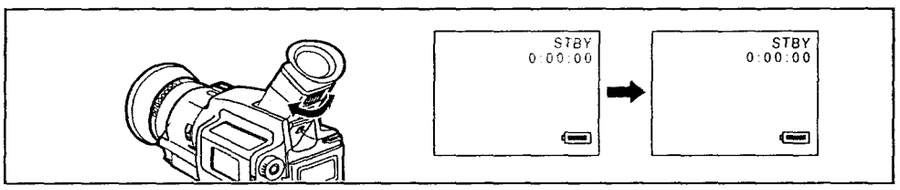

Note on the viewfinder

The color viewfinder employs LCD screen made with high-precision technology.
However, black points or bright points of light (red, blue or green) may appear constantly on the color viewfinder screen. These points are not recorded on the tape. This is not a malfunction. (Effective dots: more than 99.99 %)

Note on beep sound

As indicated with ♪ in the illustrations, a beep sounds when you turn the power on or when you start recording and two beeps sound when you stop recording, confirming the operation. Several beeps also sound as a warning of any unusual condition of the camcorder (p. 72). Note that the beep sound is not recorded on the tape. If you do not want to hear the beep sound, set the BEEP to OFF in the menu system (p. 22).

To record through an external microphone

Connect a microphone (not supplied) to the MIC jack. In this case, sound from the built-in microphone will not be recorded.

Using the Zoom Feature

Zooming is a recording technique that lets you change the size of the subject in the scene. For more professional-looking recordings, use the zoom sparingly.
Set DIGITAL MODE to ZOOM, and press the zoom button.
T side: for telephoto (subject appears closer)
W side: for wide-angle (subject appears farther away)

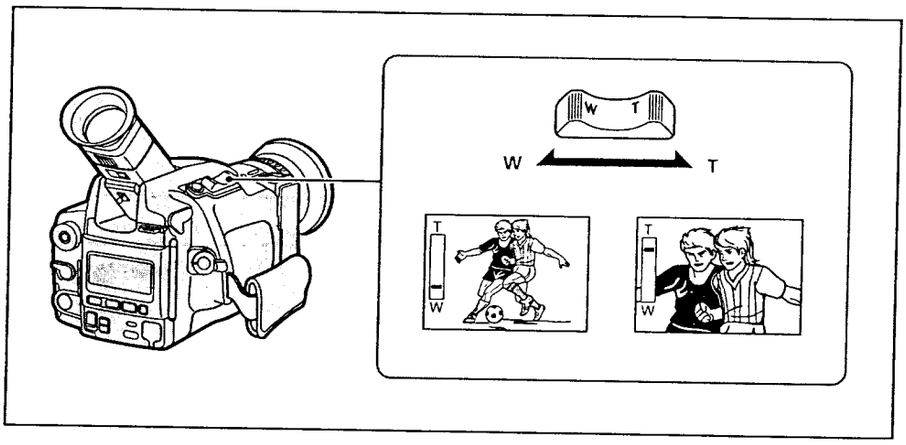

Zooming Speed
Press the zoom button firmly for high-speed zoom. Press it softly for relatively slow zooming.

Note on the focus range
You can shoot a subject that is at least 3 feet (about 1 m) in the telephoto position, 0.5 inch (about 1 cm) in the wide position away from the lens surface.

Notes on Digital Zoom
- More than 10x zoom is performed digitally, and the picture quality deteriorates as you go toward the T side. If you do not want to use the digital zoom, set the D ZOOM function to OFF in the menu system (p. 22).
- The horizontal bar in the power zoom indicator separates the digital zooming zone (above the bar **[a]**) and the optical zooming zone (under the bar **[b]**). If you set the D ZOOM function to OFF, the part above the bar disappears.

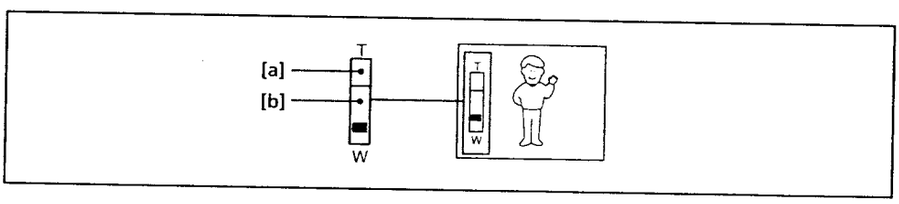

Hints for Better Shooting

For hand-held shots, you'll get better results holding the camcorder according to the following suggestions:

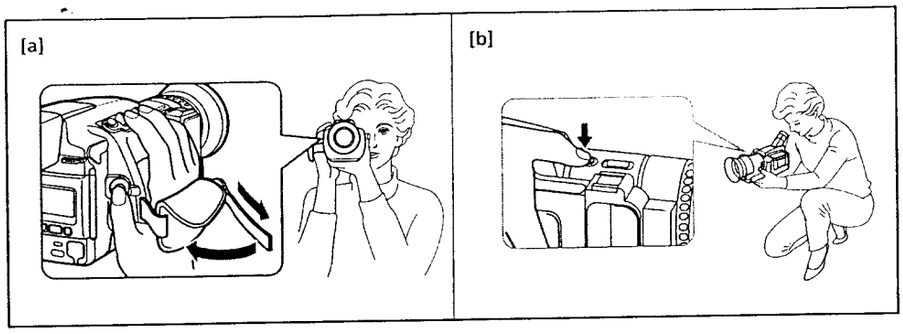

- Hold the camcorder firmly and secure it with the grip strap so that you can easily manipulate the controls with your thumb **[a]**.
- Place your right elbow against your side.
- Place your left hand under the camcorder to support it.
- Keep your fingers away from the built-in microphone.
- Place your eye firmly against the viewfinder eyecup.
- Use the viewfinder frame as a guide to determine the horizontal plane.
- You can record in a low position to get an interesting recording angle. Lift the viewfinder up to record from a low position (you can turn it up to about 80 degrees.) **[b]**. In this case, it's useful to use REC START/STOP located on the top of the camcorder.

Caution on the viewfinder

- Do not pick up the camcorder by the viewfinder. **[c]**
- Do not place the camcorder so as to point the viewfinder toward the sun. The inside of the viewfinder may be deformed. Be careful in placing the camcorder under sunlight or by the window. **[d]**

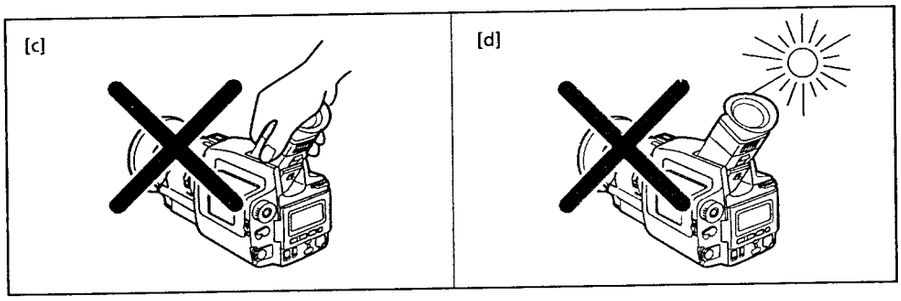

Place the camcorder on a flat surface or use a tripod

Try placing the camcorder on a table top or any other flat surface of suitable height. If you have a tripod for a still camera, you can also use it with the camcorder. Make sure the tripod screw is shorter than 9/32 inch (6.5 mm).

Checking the Recorded Picture

The editsearch function is used to view the recorded picture for a moment during recording. Using EDITSEARCH, you can review the last recorded scene or check the recorded picture in the viewfinder.
In standby mode, press the – (⊖) side of EDITSEARCH momentarily; the last few seconds of the recorded portion plays back (**Rec Review**). You can also monitor the sound by using headphones (not supplied).
Hold down the – side of EDITSEARCH until the camcorder goes back to the scene you want. The last recorded portion is played back. To go forward, hold down the + side (**Editsearch**).

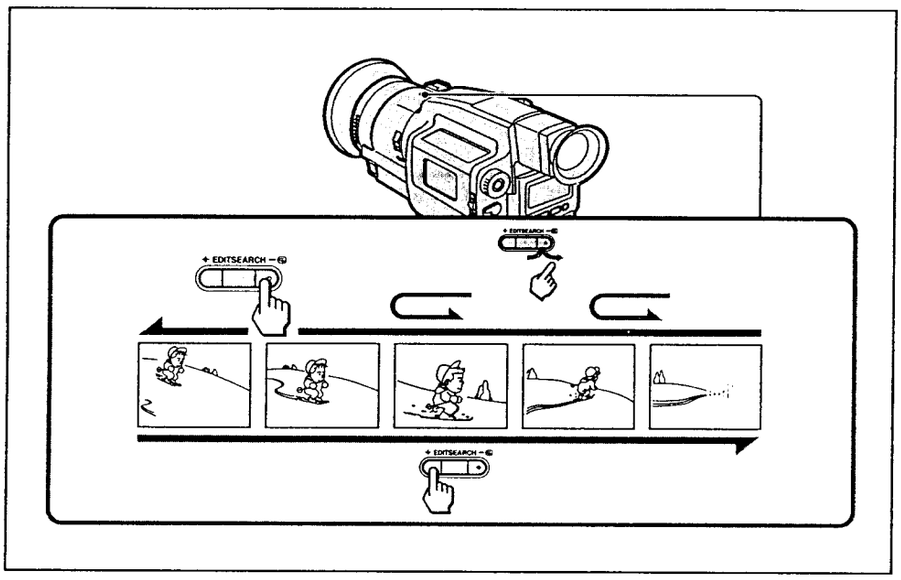

To Begin Rerecording
Press START/STOP. Provided you do not eject the cassette, the transition between the last scene you recorded and the next scene you record will be smooth.

Connections for Playback

You can use this camcorder as a VCR by connecting it to your TV for playback. It is recommended to use the house current as the power source (p. 20).

Connecting Directly to a TV

Connect the camcorder to your TV by using the supplied A/V connecting cable. Set the TV/VCR selector to VCR on the TV.

If you are going to connect the camcorder using the S video cable **[a]**, you do not need to connect the yellow (video) plug of the A/V connecting cable **[b]**.

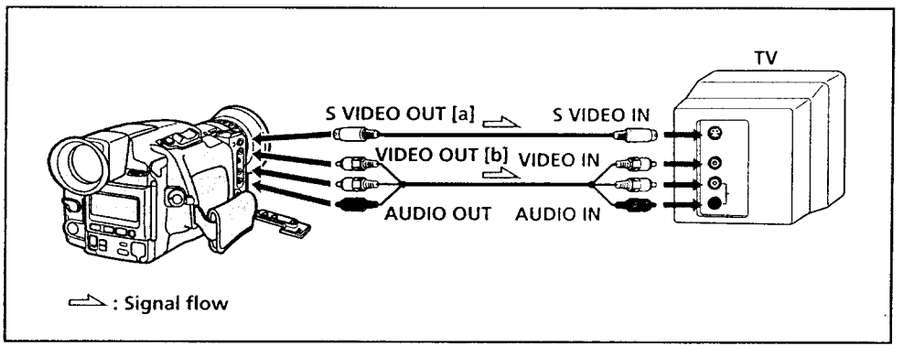

If a VCR is connected to the TV

Connect the camcorder to LINE IN on the VCR by using the supplied connecting cable. Set the input selector on the VCR to LINE. Set the TV/VCR selector to VCR on the TV.

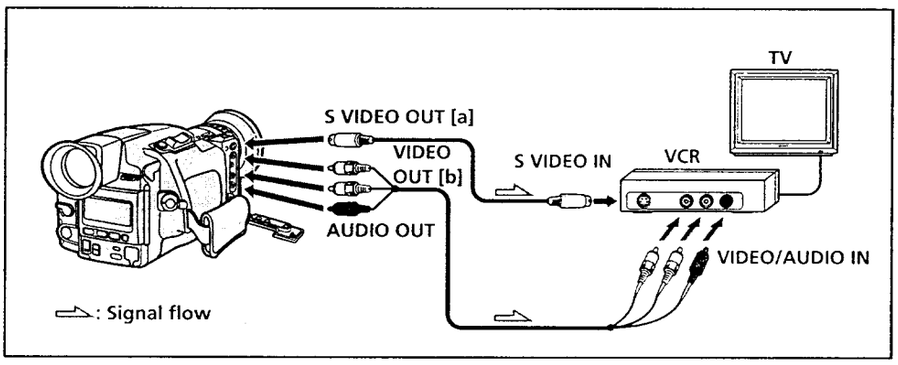

If your TV or VCR is monaural type

Connect only the white plug for audio on the TV or the VCR. With this connection, the sound is monaural, and the sound from the headphones jack on the camcorder is also monaural.

To connect a TV or a VCR without audio/video input jacks

Use the RFU-95UC RFU adaptor (not supplied).

Playing Back a Tape

You can monitor the playback picture in the viewfinder. You can also watch it on a TV screen, after connecting the camcorder to a TV or VCR (p. 16). You can control playback using the supplied Remote Commander (p. 66).

(1) While pressing the center button on the POWER switch, turn it to VTR.
(2) Insert the recorded tape with the window facing out.
(3) Press ◀◀ to rewind the tape.
(4) Press ▷. Playback starts.

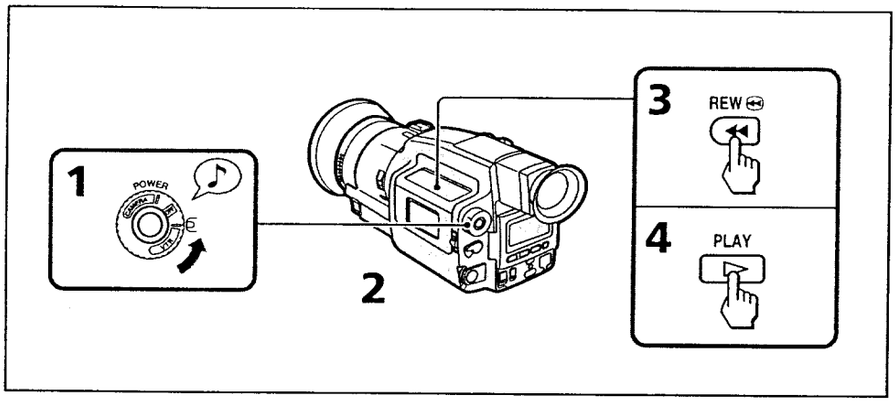

To stop playback, press □.
To fast-forward the tape, press ▶▶.

To monitor the sound while viewing the playback picture in the viewfinder
Connect headphones (not supplied) to the ∩ jack (p. 22).

To mark the portion you want to monitor
Press ZERO SET MEMORY while playing back. After you finish playing back, press ◀◀. The tape rewinds to the position you want (0:00:00) and stops.

See the next page for further information.

Various Playback Modes

To view a still picture (playback pause)

Press ❚❚ during playback. To resume playback, press ❚❚ or ▷. When still picture mode lasts for 5 minutes or more, the camcorder automatically enters stop mode. To playback again, press ▷ again.

To locate a scene (Picture Search)

Keep pressing ◀◀ or ▶▶ during playback. To resume normal playback, release the button.

To monitor the high-speed picture while advancing the tape or rewinding (Skip scan)

Keep pressing ◀◀ while rewinding or ▶▶ while advancing the tape. To resume normal playback, press ▷.

To view the picture at 1/5 speed (Slow Playback)

Press < or > to select direction, then press ❚► SLOW during playback. To resume normal playback, press ▷. If slow playback lasts for about 1 minute, it shifts to normal speed automatically.

To view the picture at double speed

Press < or > to select direction, then press x2 on the Remote Commander during playback. To resume normal playback, press ▷.

To view the picture frame by frame

Press > during playback pause mode.
Press < in reverse direction during playback pause mode.

To view the picture in reverse direction

Press < during playback.

Notes on playback

- The sound is muted in the various playback modes.
- The previous scene may appear like mosaic noise during slow playback or playback pause. This is not malfunction.

To display the indicators

Press DISPLAY. Tape counter, remaining battery indicator and other indicators appear on the connected TV screen. To erase the indicators, press DISPLAY again.

Using Alternate Power Sources

You can choose any of the following power sources for your camcorder: battery pack (p.6), the house current, and 12/24 V car battery. Choose the appropriate power source depending on where you want to use your camcorder.

Place	Power source	Accessory to be used
Indoors	House current	AC power adaptor AC-V515 and connecting cord DK-715 (supplied)
Outdoor	Battery pack	Battery pack NP-720 (supplied)
In a car	12 V or 24 V car battery	DC pack DC-V515

You cannot connect to this camcorder using the connecting cord supplied with AC-V515 or DC-V515. Use the connecting cord supplied with this camcorder.

This mark indicates that this product is a genuine accessory for Sony video products. When purchasing Sony video products, Sony recommends that you purchase accessories with this "GENUINE VIDEO ACCESSORIES" mark.

Using the House Current

To use the supplied AC power adaptor:
(1) Connect the power cord to a wall outlet.
(2) Connect the camcorder and the AC power adaptor using the supplied connecting cord.

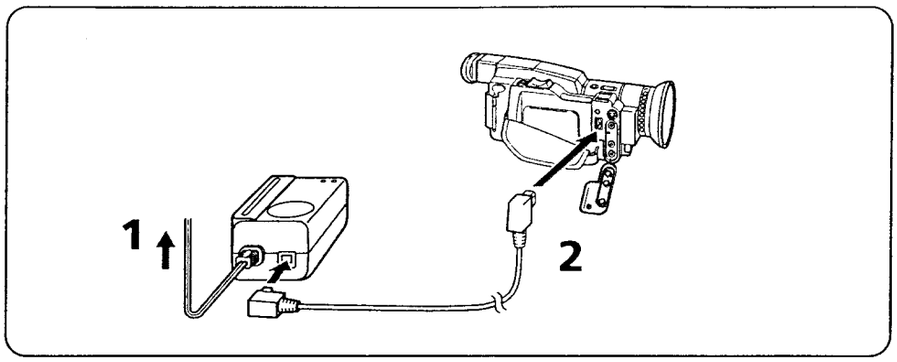

You can charge the battery inserted in the camcorder by connecting the AC power adaptor to the camcorder and turning the power switch to OFF.
Charging time of the supplied NP-720 battery pack is approx. 150 minutes. While charging, the battery indicator appears in the display window:

After charging finishes, the indicator disappears. You can also charge two batteries at a time by installing the battery pack and connecting the AC power adaptor. It takes about 4 hours to charge the batteries.

WARNING
Power cord must only be changed at qualified service shop.

Precaution
The set is not disconnected from the house current as long as it is connected to the wall outlet, even if the set itself has been turned off.

Notes on the POWER lamp
- The POWER lamp will remain lit for a while even if the unit is unplugged after use. This is normal.
- If the POWER lamp does not light, disconnect the power cord. After about one minute, try again.

Using a Car Battery

Use the DC-V515 pack (not supplied). Connect the cord of the DC pack to the cigarette lighter socket of a car (12 V or 24 V). Connect the DC pack in the same way as the AC power adaptor.
Use the connecting cord supplied with this camcorder.

Changing the Mode Settings

You can change the mode settings in the menu system to further enjoy the features and function of the camcorder.

(1) Slide OPEN and open the battery cover.
(2) Press MENU to display the menu in the viewfinder.
(3) Press ↑ or ↓ to select the desired item, then press EXECUTE.
(4) Press ↑ or ↓ to select the desired mode, then press EXECUTE. If you want to change the other modes, repeat steps 3 and 4.
(5) Press MENU to erase the menu display.

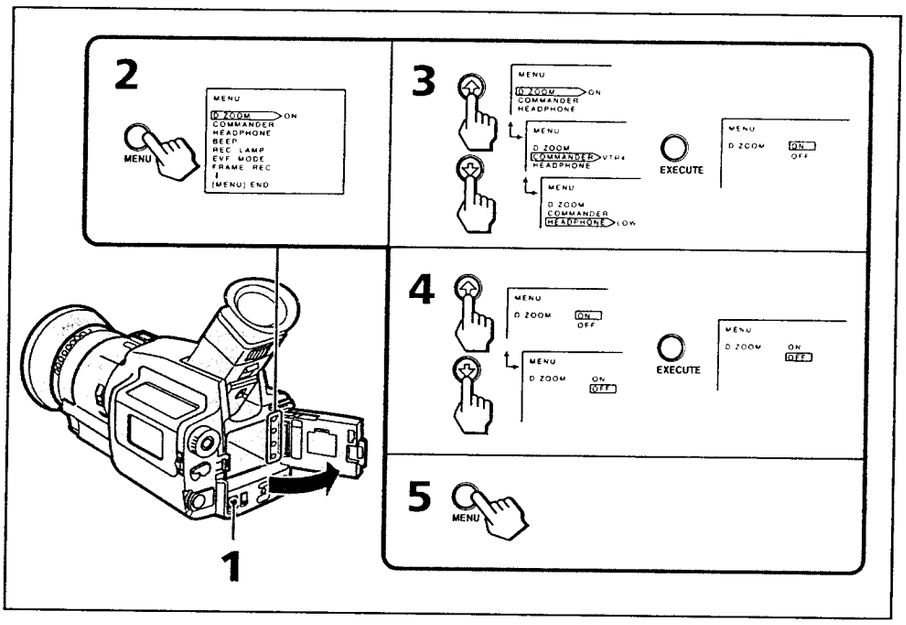

To display the menu on the TV screen
Connect the camcorder to your TV (p. 16), and press MENU.

Note on the menu system
You may need to repeat step 3 before you select the desired mode because some items have three steps.

See the next page for the items in the menu system.

Setting the Mode of Each Item

Select RETURN to return to main menu (item select).

Items in CAMERA and VTR Modes

COMMANDER <VTR4/OFF/ID/ID SET>

- Normally select VTR4.
- Select OFF when not using the Remote Commander.
- Select ID when using the Remote Commander with the ID number set.
- Select ID SET to register the ID number so that the camcorder responds only to the supplied Remote Commander, and not to other Remote Commanders. To set the ID, see page 68.

HEADPHONE <LOW/MID/HIGH>

- Normally select LOW.
- Select MID to slightly raise the volume of the headphones.
- Select HIGH to raise the volume of the headphones.

BEEP <ON/OFF>

- Normally select ON.
- Select OFF to turn the beep sound off.

EVF MODE <COLOR/BRIGHT>

- Select this item and change the level of the indicator by pressing ↑ or ↓ to adjust the color intensity and brightness of the picture in the viewfinder.

CLOCK SET

- Select this item to reset the date or time. See page 48.

Items in CAMERA Mode only

REC LAMP <ON/OFF>

- Select ON to turn on the recording lamp on the front panel during recording.
- Select OFF otherwise.

D ZOOM <ON/OFF>

- Select ON to activate digital zooming. The zooming ability becomes 20x.
- Select OFF otherwise. The zooming ability becomes 10x.

FRAME REC <OFF/ON>

- Normally select OFF.
- Select ON for cut recording (p. 30).

When you remove the power source, the setting becomes OFF.

INT REC <SET/INTERVAL/REC TIME>

- When you make interval recording , select SET and then select ON (p. 29). Otherwise, select OFF.
- Select INTERVAL to set or change the waiting time for interval recording.
- Select REC TIME to set or change the recording time for interval recording.

When you remove the power source, the setting becomes OFF, but the waiting time and recording time are retained.

Items in VTR Mode only

A MIX BAL

- Select this item and change the level of the indicator by pressing ↑ or ↓ to adjust the volume balance between audio mode ST1 and ST2.

SEARCH <C MEMORY/OFF>

- Normally select C MEMORY to activate cassette memory search function.
- Select OFF otherwise. In this case, the recorded picture is searched without cassette memory function.

When DIGITAL MODE is set to OVERLAP

You cannot set D ZOOM to ON. Once you set DIGITAL MODE to OVERLAP, D ZOOM setting is changed to OFF automatically.

About FRAME REC and INT REC setting

Both settings are automatically set to off when:

- Power switch is set to OFF or VTR.
- Power source is disconnected.
- STANDBY is set to PHOTO STANDBY.

Other settings retains as long as lithium battery is installed even if power source is disconnected.

Fade-in and Fade-out

You can fade in or out to give your recording a professional appearance.
When fading in, the picture gradually fades in from black while the sound increases. When fading out, the picture gradually fades to black while the sound decreases.
With the overlap function, the picture gradually fades in over the still picture of the last scene recorded.
With the slide function, the still picture of the last scene recorded slides out and the scene being shot appears.

Using the Fader and Overlap Function

When Fading in [a]

(1) Set DIGITAL MODE to ZOOM.
(2) While the camcorder is in Standby mode, press FADER/OVERLAP. The fade indicator starts flashing.
(3) Press START/STOP to start recording. The fade indicator stops flashing, fading in and recording starts.

When Fading out [b]

(1) Set DIGITAL MODE to ZOOM.
(2) During recording, press FADER/OVERLAP. The fade indicator starts flashing.
(3) Press START/STOP to stop recording. The fade indicator stops flashing, fading out starts, and then recording stops.

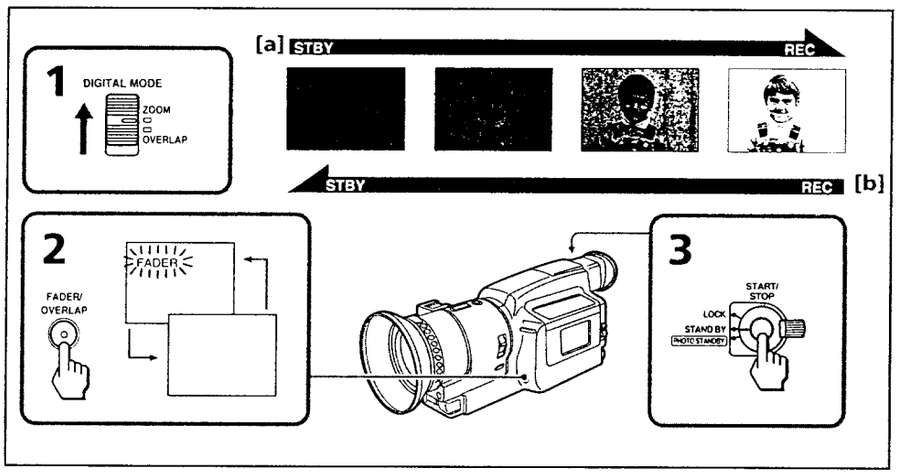

When Using Overlap or Slide

(1) Set DIGITAL MODE to OVERLAP.
(2) Press FADER/OVERLAP repeatedly until the desired effect indicator appears in the viewfinder.
(3) Press START/STOP to start recording.
With the OVERLAP effect, the scene being shot gradually fades in over the still picture of the last recorded scene. With the SLIDE effect, the scene being shot gradually appears while the still picture of the last recorded scene is sliding out.

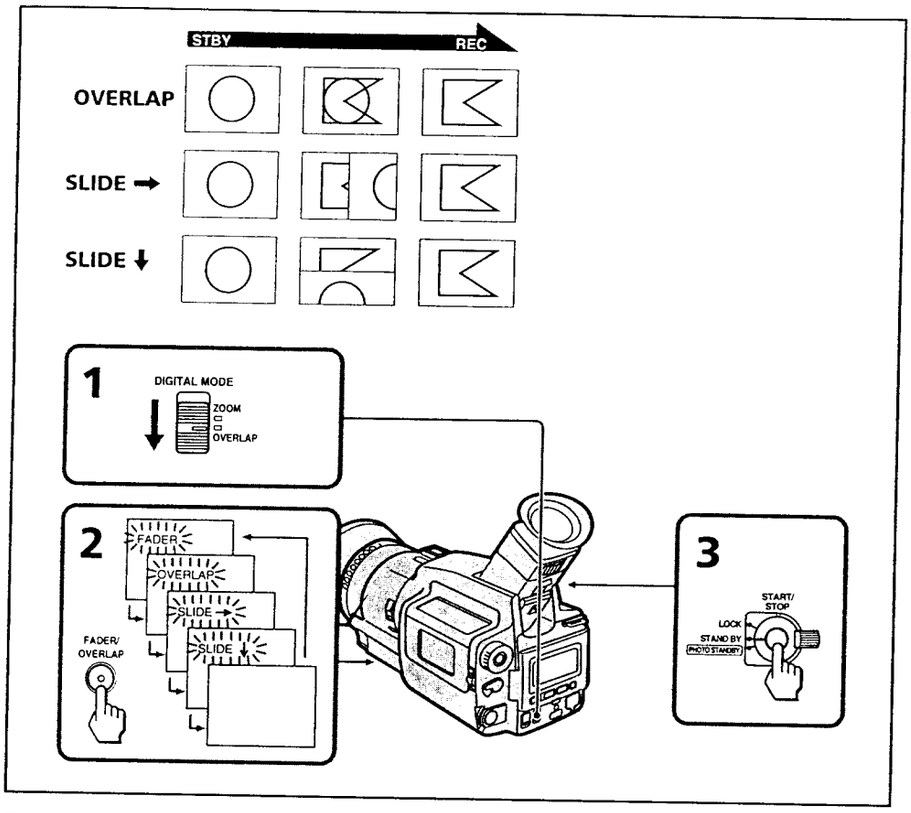

To cancel the fade-in/fade-out function

Before pressing START/STOP, press FADER/OVERLAP until the fade indicator disappears.

To use the fading function repeatedly

Start from step 1 each time.

Notes on the fading, overlap and sliding function

- You cannot fade in, fade out, or use the overlap/slide function while you record with interval recording, cut recording or photo recoring.
- When you set the camcorder to standby mode from a mode other than recording and select OVERLAP or SLIDE, the camcorder starts Rec Review automatically to store the last scene on the tape.

Re-recording a Picture in the Middle of a Recorded Tape

You can re-record a scene in the middle of a recorded tape by setting the starting **[a]** and ending **[b]** points. The previously recorded portion will be erased.

(1) Press START/STOP while recording.
The camcorder enters Standby mode.
(2) Hold down the +(forward) or –(reverse) side of EDITSEARCH until the camcorder goes to the point where you want to end the insertion.
The camcorder enters Standby mode again **[b]**.
(3) Press ZERO SET MEMORY.
The counter is reset to "0:00:00". "ZERO SET MEMORY" flashes, and the ending point is stored in memory.
(4) Hold down the – side of EDITSEARCH until the camcorder goes back to the point where you want to start the insertion **[a]**.
The camcorder enters Standby mode again.
(5) Press START/STOP to start re-recording.
The insert recording stops automatically at the counter zero point, and the camcorder enters Standby mode again. Zero set memory resumes automatically.

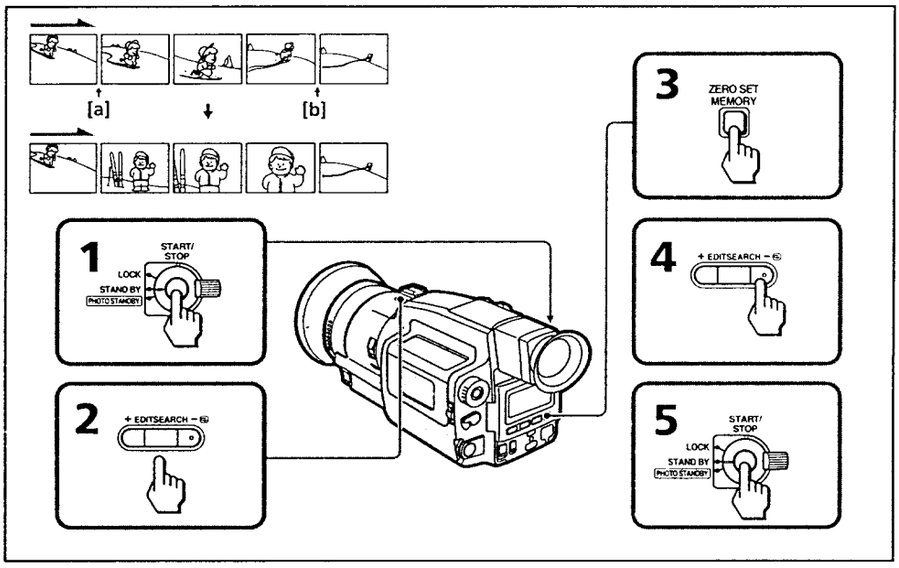

To change the end point

Press ZERO SET MEMORY so that "ZERO SET MEMORY" disappears.
Repeat steps 2 to 4.

Notes on editsearch

- The picture may be distorted at the end of the inserted portion when it is played back.
- Zero set memory may not function when there is a blank portion on a tape.
- You can re-record without using the ZERO SET MEMORY. Skip steps 2 and 3. Press STOP□ to stop recording.

To use the insert recording repeatedly

Start from step 1 each time.

Photo Recording

You can record a still picture like a photograph for about seven seconds. This mode is useful when you want to enjoy a picture such as a photograph or when you print a picture using a video printer. Shutter speed is automatically adjusted up to 1/1000 depending on the exposure.

(1) Turn STANDBY to PHOTO STANDBY.

(2) Keep pressing PHOTO lightly until a still picture appears in the viewfinder. (You cannot use the PHOTO button on the Remote Commander for this operation.)

To change the still picture, release PHOTO, select other picture and keep pressing PHOTO again.

(3) Press PHOTO deeper.

The still picture in the viewfinder is recorded for about seven seconds. The sound during those seven seconds is also recorded. You cannot turn off the power or turn STANDBY down to LOCK while recording.

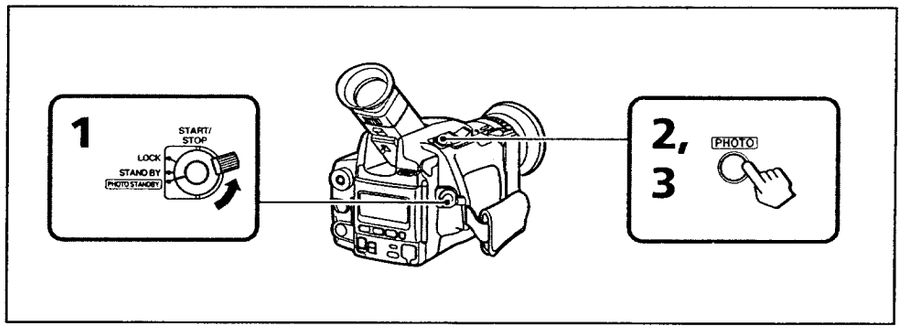

When using the video printer

The Remote Commander (supplied) is useful when printing the picture using the CVP-M1 Video printer (not supplied). After connecting each LANC control jack using a control cable and selecting the desired picture to print, press PRINT on the supplied Remote Commander instead of pressing CAPTURE and PRINT on the video printer.

Refer to the instruction manual of the video printer also.

Interval Recording

You can make a time-lapse recording by setting the camcorder to automatically record and standby sequentially. You can achieve an excellent recording for flowering, emergence, etc., with this function.
(1) Slide OPEN and open the battery cover while the camcorder is in Standby mode. Press MENU to display the menu in the viewfinder.
(2) Press ↑ or ↓ to select INT REC, then press EXECUTE.
(3) Press ↑ or ↓ to select SET, then press EXECUTE.
(4) Press ↑ or ↓ to select ON, then press EXECUTE.
(5) Press ↑ or ↓ to select INTERVAL, then press EXECUTE.
(6) Press ↑ or ↓ to select the desired waiting time, then press EXECUTE.
The time: 30SEC ↔ 1MIN ↔ 5MIN ↔ 10MIN.
(7) Press ↑ or ↓ to select REC TIME, then press EXECUTE.
(8) Press ↑ or ↓ to select the desired recording time, then press EXECUTE.
The time: 0.2SEC ↔ 0.5SEC ↔ 1SEC ↔ 2SEC.
(9) Press MENU to erase the menu display.
(10) Press START/STOP to start interval recording.

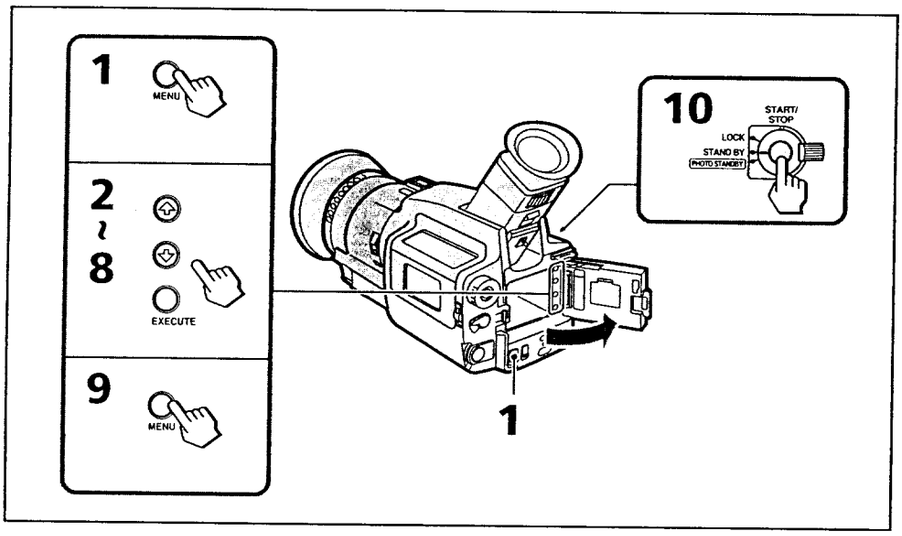

During interval recording
INTERVAL appears in the viewfinder.

To stop interval recording before the tape ends
Press START/STOP.

To cancel the interval recording
- Set the INT REC mode to OFF in the menu system.
- Turn STANDBY down to LOCK.
- Turn the POWER switch to OFF.

Note on interval recording
You cannot do interval recording with photo recording.

Cut Recording

You can make a recording with a stop-motion animated effect using cut recording. To create this effect, alternately move the subject a little and make a cut recording. Secure the camcorder and use the Remote Commander for effective cut recording.

(1) Slide OPEN and open the battery cover while the camcorder is in Standby mode. Press MENU to display the menu in the viewfinder.
(2) Press ↑ or ↓ to select FRAME REC, then press EXECUTE.
(3) Press ↑ or ↓ to select ON, then press EXECUTE.
(4) Press MENU to erase the menu display.
(5) Press START/STOP on the camcorder or the Remote Commander to start cut recording.
The camcorder records about six frames (about 0.2 sec.), then enters in recording standby mode.
(6) Move the subject, and repeat step 5.

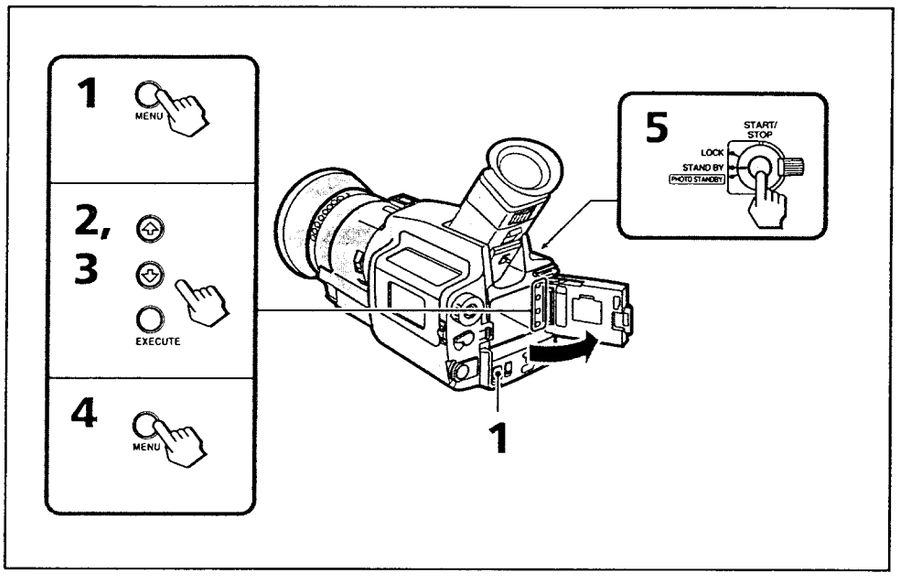

During cut recording

FRAME REC appears in the viewfinder.

To cancel the cut recording

- Set the FRAME REC mode to OFF in the menu system.
- Turn STANDBY down to LOCK.
- Turn the POWER switch to OFF.

Notes on cut recording

- The last portion of cut recording may be longer than six frames.
- You cannot do cut recording with photo recording.
- Remaining tape indicator may not be accurate if you do cut recording repeatedly.

Enjoying Digital Effect

You can make interesting pictures using the flash picture and slow shutter recording.

(1) Set DIGITAL MODE to ZOOM.
(2) Press DIGITAL EFFECT repeatedly to select the desired effect.
Each time you press the button, the indicator inside the viewfinder changes:
FLASH1 → FLASH2 → S SHUTTER1 → S SHUTTER2 → No indicator
(3) Press START/STOP to start recording.

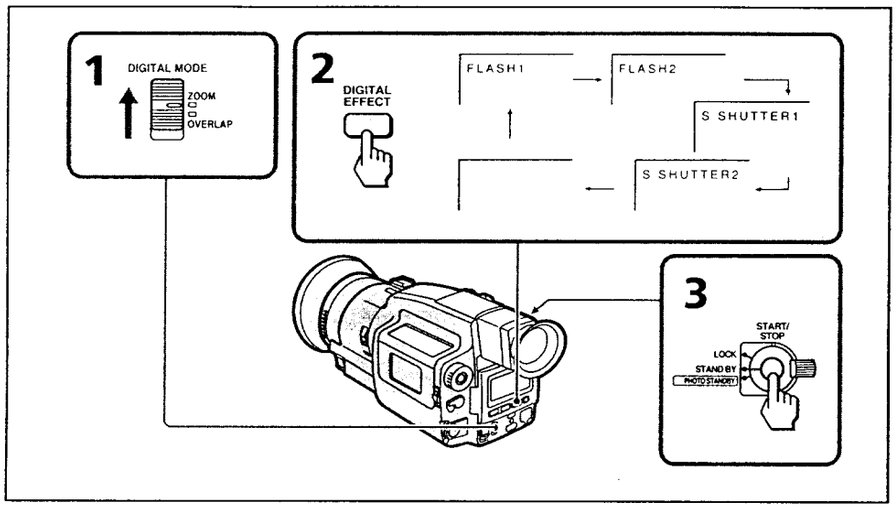

To cancel the digital effect

Press DIGITAL EFFECT repeatedly until the indicator disappears.

Flash intervals

FLASH1 mode: 1/7.5 second
FLASH2 mode: 1/2 second

Slow shutter speeds

S SHUTTER1 mode: 1/15 second
S SHUTTER2 mode: 1/3.75 second

Focusing Manually

To activate auto focusing, very bright condition and proper contrast are required. Use manual focus according to the conditions. You can focus manually even if the HOLD/AUTO LOCK selector is set to AUTO LOCK (Automatic Mode).

When to Use Manual Focus

In the following cases you should obtain better results by adjusting the focus manually.

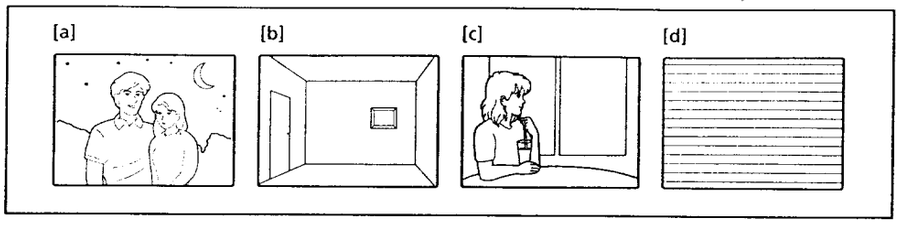

- Insufficient light **[a]**
- Subjects with little contrast — walls, sky, etc. **[b]**
- Too much brightness behind the subject **[c]**
- Horizontal stripes **[d]**
- Bright subject or subject reflecting light
- Shooting a stationary subject when using a tripod

Focusing Manually

When focusing manually, first focus in telephoto before recording, and then reset the shot length.
(1) Set FOCUS to MANUAL while the camcorder is recording or in Standby mode.
appears in the viewfinder.
(2) Keep pressing the "T" (telephoto) side of the zoom button until the zooming stops.
(3) Turn the focus ring to achieve a sharp focus.
(4) Set the desired shot length using the zoom button.

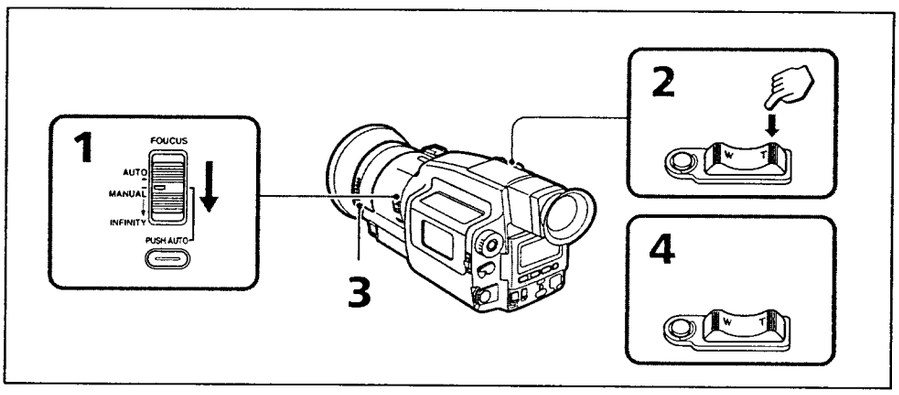

When ▲▲ or ▲ appears
When ▲▲ appears Focus is at infinity.
When ▲ appears Subject is too close to focus.

To Reactivate Auto Focusing

Set FOCUS to AUTO to turn off in the viewfinder.

Shooting in relatively dark places

Shoot in wide angle after focusing in telephoto.

Shooting a scene with lots of movement in bright light

Set the zoom fully to the wide-angle position.

Close-ups (Macro)

Set the zoom fully to the wide-angle position.

Focusing to Infinity

Focus to infinity when the camcorder focuses on a nearby subject while you want on focus to a distant subject.
Slide FOCUS in the direction of the arrow (INFINITY) to focus to infinity.
When you release FOCUS, manual focus resumes.

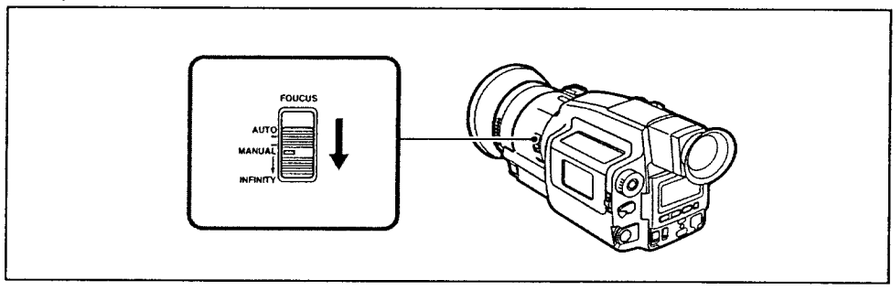

Shooting with Auto Focusing Momentarily

Set FOCUS to MANUAL and press PUSH AUTO.
The auto focus functions while you are pressing PUSH AUTO.
Use this switch to focus on one subject and then another with smooth focusing.
When you release PUSH AUTO, manual focusing resumes.

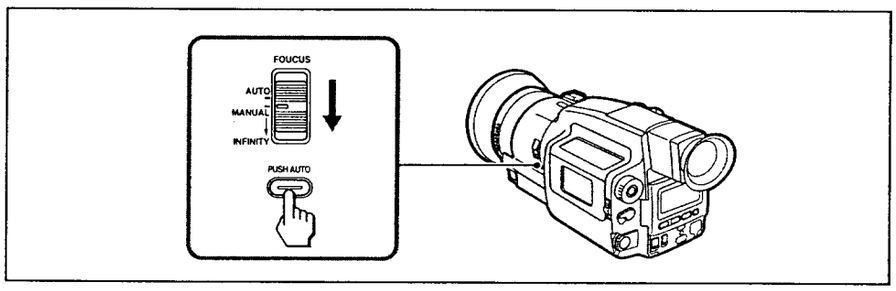

Using the PROGRAM AE Function

You can select from four PROGRAM AE (Auto Exposure) modes to suit your shooting situation. When you use PROGRAM AE, you can get a Portrait effect (the subject is in focus and the background is out of focus), capture high-speed action or record night views.

Selecting the Best Mode

Select one of four modes, referring to the following.

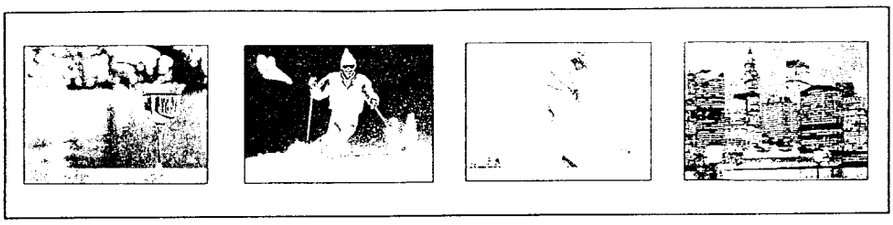

Portrait mode
- A still subject such as a person or flower
- Zooming in on a subject in the telephoto mode
- A subject behind an obstacle such as a net

Sports mode
- Outdoor sports scenes such as football, tennis, golf or skiing
- A landscape in a moving car

High-speed shutter mode
- A golf swing or tennis match in fine weather with the ball captured clearly
- Playing back certain scenes with high-speed movements in clear, sharp picture

Twilight mode
- Recording night views, neon signs or fireworks

Using the PROGRAM AE Function

(1) Set HOLD/AUTO LOCK selector to the center (auto lock release) position while the camcorder is in Standby mode.
(2) Press PROGRAM AE repeatedly until the desired PROGRAM AE indicator appears in the viewfinder.
(3) Press START/STOP to start recording.

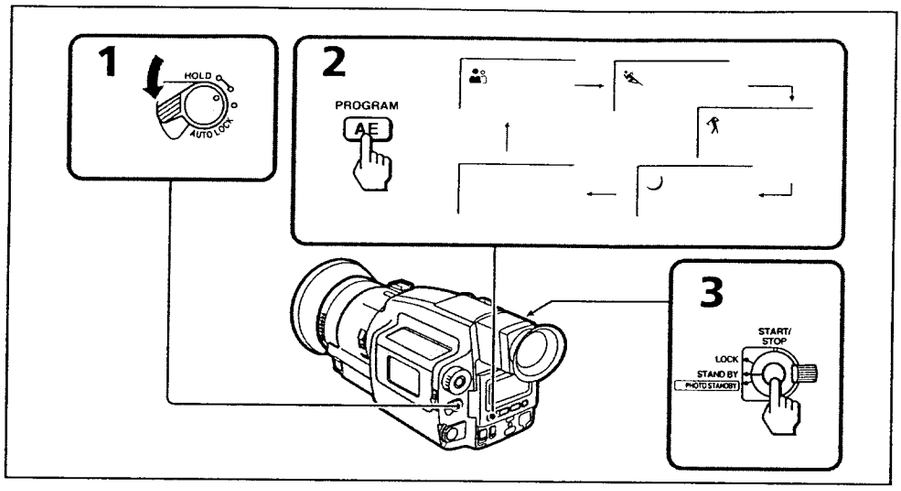

To return to automatic mode

Set HOLD/AUTO LOCK selector to AUTO LOCK or press PROGRAM AE repeatedly until no indicator appears in the viewfinder.

Note on shutter speed

The shutter speed in each PROGRAM AE mode is as follows:
Portrait mode — between 1/60 to 1/2000
Sports mode — between 1/60 to 1/500
High-speed shutter mode — 1/4000
Twilight mode — 1/60

If you use the slow shutter recording

You cannot use the PROGRAM AE function.

Adjusting the White Balance

White balance adjustment makes white subjects look white and allows more natural color balance for camera recording. Normally white balance is automatically adjusted. You can obtain better results by adjusting the white balance manually when lighting conditions change quickly, or when recording outdoors: e.g., neon signs, fireworks.

Selecting the Appropriate Mode

Select the appropriate white balance mode under the following conditions.

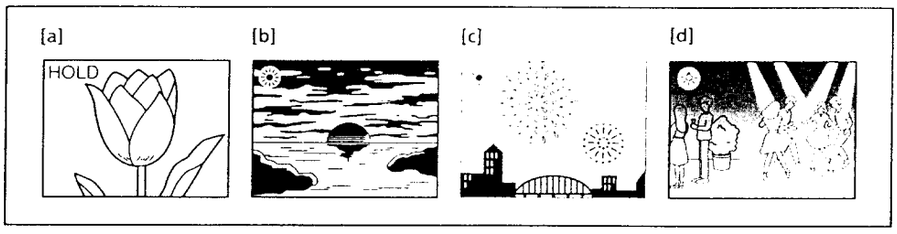

HOLD Hold mode
- Monochromatic subject or background [a]

☀ Outdoor mode
- Under a color matching fluorescent lamp
- Recording a sunset/sunrise, just after sunset, just before sunrise [b], neon signs, or fireworks [c]

Indoor mode
- Lighting condition changes quickly. [d]
- Too bright place such as photography studios
- Under sodium lamps or mercury lamps

Setting the White Balance

(1) Set HOLD/AUTO LOCK selector to the center (auto lock release) position while the camcorder is in Standby mode.
(2) Press WHT BAL repeatedly to select the appropriate white balance mode.
Each time you press the button, the indicator inside the viewfinder changes:
HOLD → ☀ (outdoor) → ☼ (indoor) → No indicator (auto)

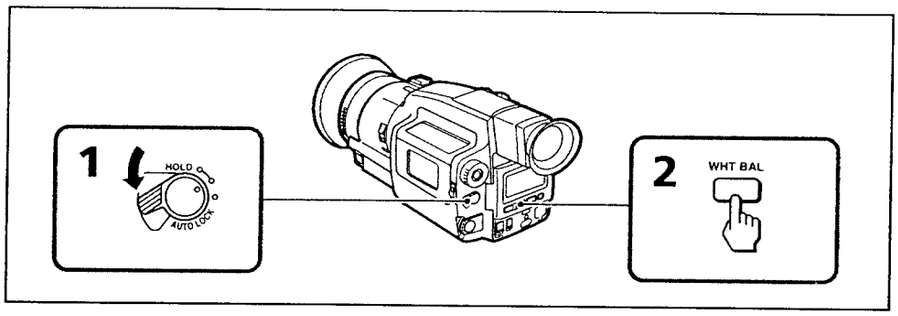

To return to automatic white balance mode

Set HOLD/AUTO LOCK selector to AUTOLOCK or press WHT BAL repeatedly until no indicator appears in the viewfinder.

Notes on white balance

- When you shoot with studio lighting or video lighting, use the ☼ (indoor) mode.
- When you shoot with fluorescent lighting, use automatic white balance mode. If you use the ☼ mode, white balance may not be adjusted appropriately.

Shooting when the lighting condition changes

- When you adjust the exposure (iris) manually, and move from indoors to outdoor or vice-versa, set HOLD/AUTO LOCK selector to AUTO LOCK, then set it to the center position again.
- When you move from indoors to outdoors or vice-versa, or detach the battery for replacement while shooting in automatic white balance mode, point the camcorder at a white subject about 10 seconds before you start recording.

Releasing the Steady Shot Function

When you shoot, the indicator appears in the viewfinder. This indicates that the Steady Shot function is working and the camcorder compensates for camera-shake.

You can release the Steady Shot function such as when shooting stationary object with a tripod.
(1) Slide OPEN and open the battery cover.
(2) Set STEADY SHOT to OFF so that the indicator disappears.

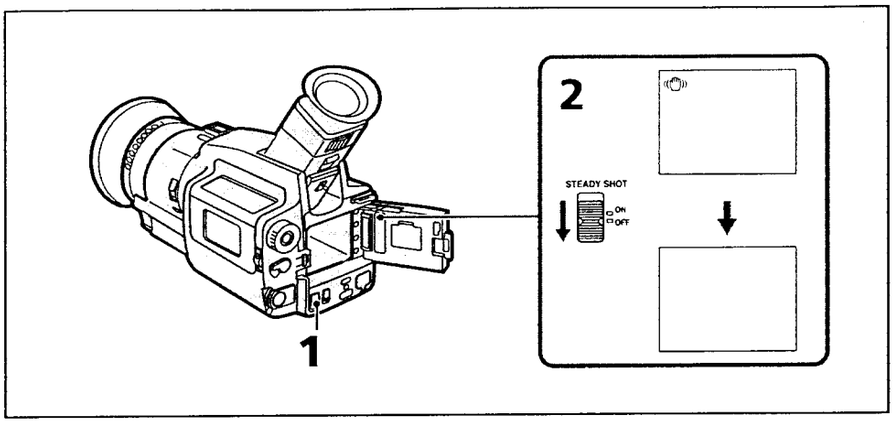

To activate the Steady Shot function again

Set STEADY SHOT to ON to display the indicator.

Notes on the Steady Shot function

- The Steady Shot function will not correct excessive camera-shake.
- The Steady Shot function becomes less effective when using a teleconversion lens (not supplied) or wide teleconversion lens (not supplied).

Searching the Recorded Picture

When you use a cassette memory-mounted miniDV cassette which can store the recorded date or time, etc., you can search the recorded picture with the date or time using the Remote Commander (**Cassette memory search**). You can also search the photo-recorded pictures only, or the recorded picture in the backward and forward direction from the present position without cassette memory.

Searching the recorded picture with the date or time – Cassette memory search

(1) Turn the POWER switch to VTR.
(2) Set SEARCH to C MEMORY in the menu system.
(3) Press SEARCH SELECT on the Remote Commander to select date search (search with the date) or photo search (search the photo-recorded pictures only).
(4) Press ▷▷I for upward or I◁◁ for downward on the Remote Commander to select the desired picture.
Cassette memory search starts.

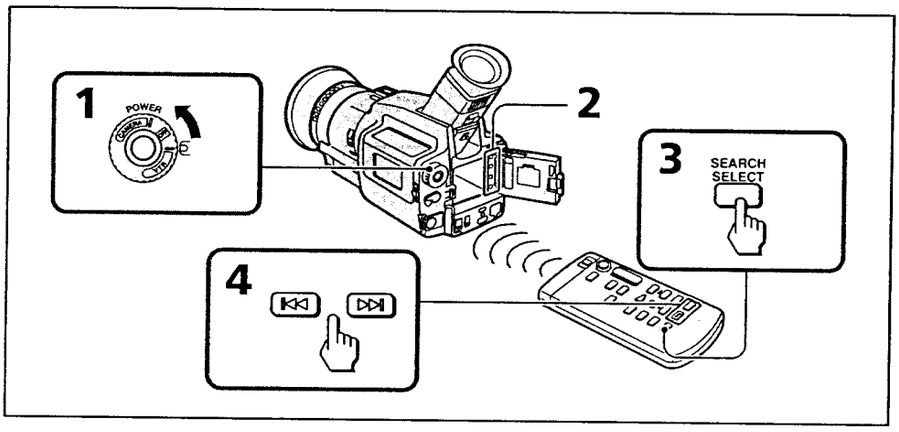

About the cassette memory search
You can search up to 6 days for date search and 43 pictures for photo search when you use the 4K-bit cassette memory.

Note on the cassette memory search
You cannot use cassette memory search function even if you set the SEARCH to C MEMORY in the menu system, when you use a miniDV cassette lacking the cassette memory.

Searching the recorded picture without using cassette memory

(1) Turn the POWER switch to VTR.
(2) Set the SEARCH to OFF in the menu system.
(3) Press SEARCH SELECT on the Remote Commander to select DATE or PHOTO.
(4) Press ⏮ for backward or ⏭ for forward on the Remote Commander to select the desired picture.
Each time you press ⏮ or ⏭, the camcorder searches for the next scene.

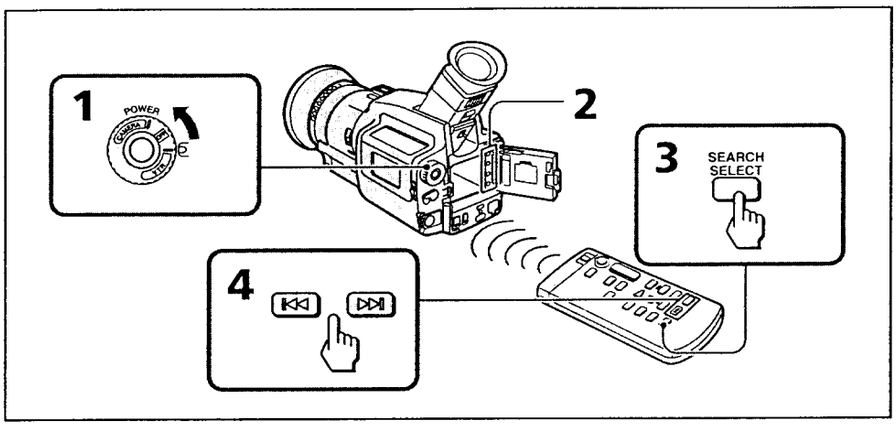

To stop searching

Press □STOP.

Notes on searching

- The camcorder may not search for the recorded picture correctly if the recorded tape has blank portions between pictures.
- Be sure to install the lithium battery when you use the cassette with cassette memory.
- The camcorder may not search if the beginning of the search portion is too close to the tape head position.
- When you use date search, the camcorder plays back the search picture, and when you use photo search, the camcorder enters playback pause at the point.

Checking the Information for the Recorded Picture

You can display the recorded date and time or the various settings in the viewfinder while playing back the tape.

Press DATA CODE on the Remote Commander while playing back. Each time you press the button, the indicator changes: recorded date and time → various settings → No indicator, cyclically in the viewfinder.

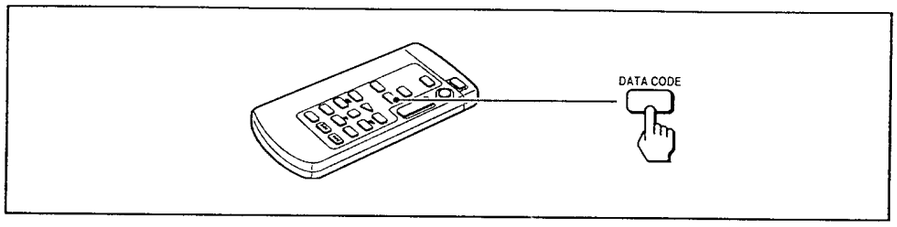

"—:—:—" appears when

- the camcorder can't read the data code because of a damaged tape or noise.
- the tape was recorded without setting the date and time.

Editing onto Another Tape

You can create your own video program by editing with any other DV, mini-DV, 8 mm, Hi8 Hi8, VHS VHS, S-VHS S-VHS, VHSC VHSC, S-VHSC S-VHSC, Betamax, or ED Beta ED Beta VCR that has video/audio inputs.
The deterioration of edited picture and sound quality will be minimized by using the DV connecting cable.

Before Editing

Connect the camcorder to the VCR using the supplied A/V connecting cable, or the DV connecting cable (not supplied).

Using the AV Connecting Cable

Set the input selector on the VCR to LINE.

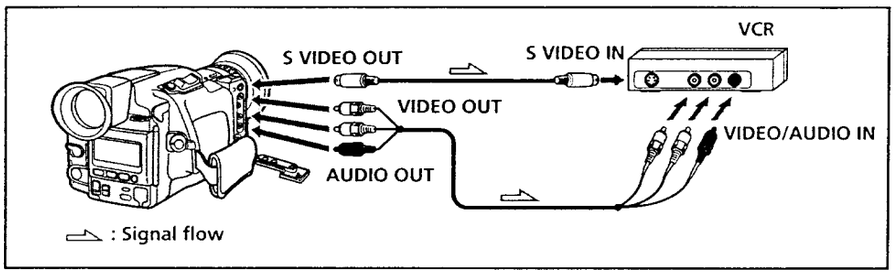

Using the DV Connecting Cable

Simply connect the DV IN/OUT jacks of the player and the recorder with the DV connecting cable.

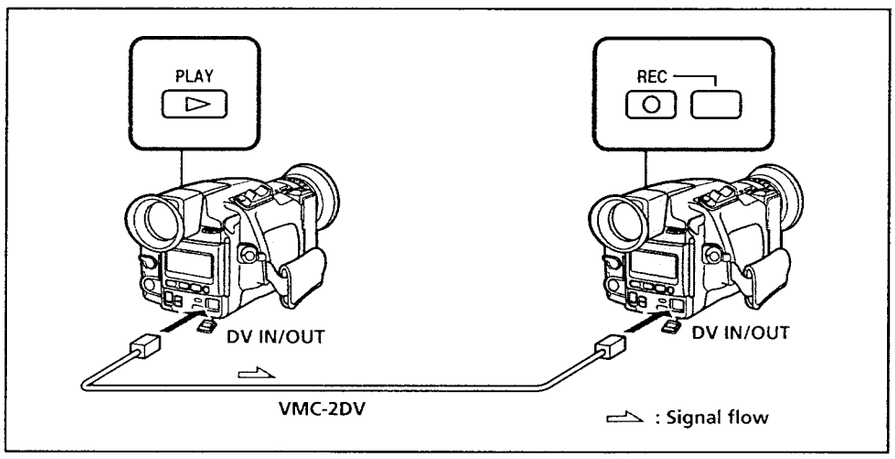

About DV connecting cable

You can record picture, sound and system data at the same time on the DV products by using the DV connecting cable only.

Starting Editing

(1) Insert a blank tape (or a tape you want to record over) into the recording VCR. Then insert your recorded tape into the camcorder.
(2) Play back the recorded tape on the camcorder until you locate the point where you want to start editing. Then set the camcorder to playback pause mode.
(3) Set the recording VCR to recording pause mode.
(4) Press **II** on the camcorder and VCR simultaneously to start editing.

To Edit More Scenes

Repeat steps 2 to 4.

To Stop Editing

Press STOP □ on the camcorder and VCR.

For fine synchro-editing function

You can edit precisely by connecting a control cable to the LANC jack of this camcorder and other video equipment having fine synchro-editing function.

Note on editing when using the AV connecting cable

Press DISPLAY on the Remote Commander while editing onto another tape to turn off the display indicators. Otherwise, the indicators will be recorded on the tape.

If your VCR is a monaural type

Connect only the white plug for audio on both the camcorder and the VCR. With this connection, the sound is monaural.

Notes on editing when using the DV connecting cable

- You can connect one VCR only.
- Connect the LANC jacks when controlling this camcorder from another VCR for editing.
- If you record playback pause picture via the DV jack, the recorded picture becomes rough.

Replacing the Lithium Battery in the Camcorder

Your camcorder is supplied with the lithium battery installed. When the battery becomes weak or dead, indicator flashes in the viewfinder for about 5 seconds when you set the POWER switch to CAMERA. In this case, **replace the battery with the Sony CR2025 or Duracell DL-2025 lithium battery. Use of another battery may present a risk of fire or explosion.**
The lithium battery installed at the factory may not last 1 year.

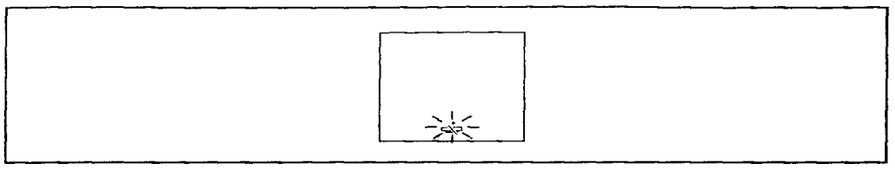

Note on Lithium Battery

Note that the lithium battery has a positive (+) and a negative (–) terminals as illustrated. **Be sure to install the lithium battery so that terminals on the battery match the terminals on the camcorder.**

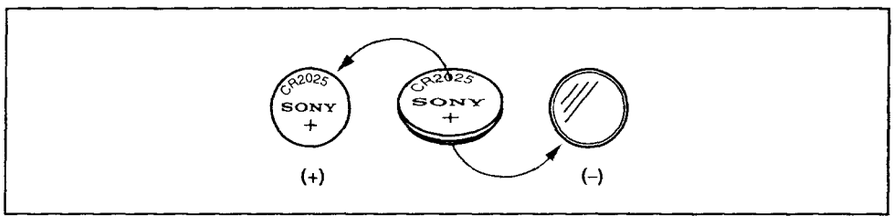

WARNING
The battery may explode if mistreated. Do not recharge, disassemble, or dispose of in fire.

Caution
Keep the lithium battery out of the reach of children. Should the battery be swallowed, consult a doctor immediately.

Replacing the Lithium Battery

When replacing the lithium battery, keep the battery pack or other power source attached. Otherwise, you will need to reset the date and time.

(1) Slide OPEN and open the battery cover.

(2) Push the battery down once and pull it out from the holder.

(3) Install the lithium battery with the positive (+) side facing out. Close the holder. Close the battery cover.

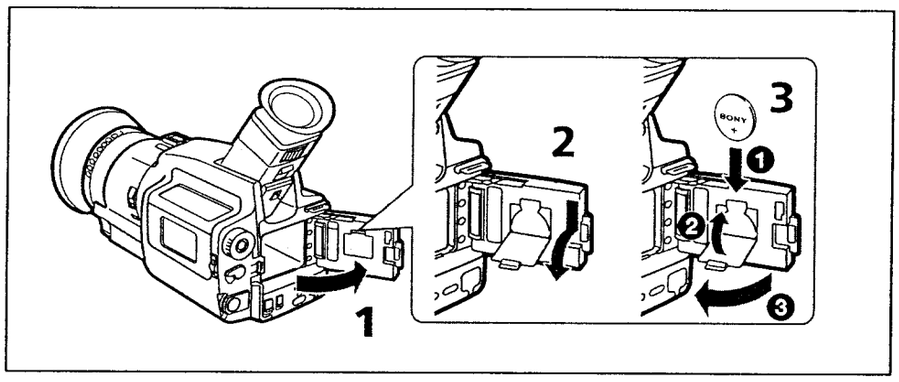

Resetting the Date and Time

You can reset the date or time in the menu system.
(1) Slide OPEN and open the battery cover.
(2) Press MENU to display the menu in the viewfinder.
(3) Select CLOCK SET, then press EXECUTE.
(4) Press ↑ or ↓ to adjust the year, and then press EXECUTE.
(5) Using ↑, ↓ and EXECUTE as step 4, adjust the month, day, hour and minutes. Note that when you hold down ↑ or ↓ the indications in the menu display advance faster.
(6) Press MENU to erase the menu display.

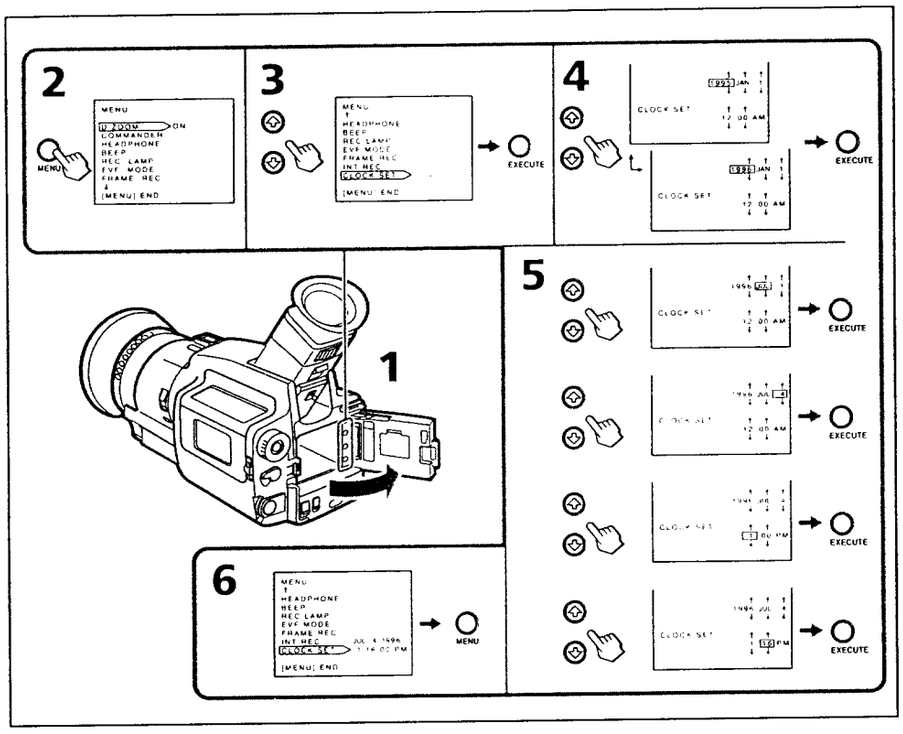

The year indicator changes as follows:
1995 → 1996 → - - - → 2025 → 1995

Note on the time indicator
The internal clock of the camcorder operates on a 12-hour cycle.
12:00:00 AM stands for midnight.
12:00:00 PM stands for noon.

Usable Cassettes

You can use the mini-DV cassette only. You cannot use any other 8 8 mm, Hi8 Hi8, VHS VHS, SVHS S-VHS, VHSC VHSC, SVHSC S-VHSC , 8 Betamax or ED Beta ED Beta cassette.

When You Play Back

You can play back the sound recorded in any audio mode.
To get the higher quality pictures of the DV format, connect the camcorder to the TV using the S video cable.
Using this camcorder, you cannot play back a tape that has recorded a copyright control signals for copyright protectin of software. "COPY INHIBIT" appears on the TV or in the viewfinder if you try to play back such a tape. This camcorder does not record copyright control signals on the tape when it records.

We recommend to use an ME cassette

You can get the highest quality pictures with this camcorder using an ME cassette which is the highest quality cassette.
You may not get as good quality with lesser quality cassettes.

Tips for Using the Battery Pack

This section shows you how you can get the most out of your battery pack.

Preparing the Battery Pack

Always Carry Additional Batteries

Have sufficient battery pack power to do 2 to 3 times as much recording as you have planned.

Battery Life is Shorter in Cold Environment

Battery efficiency is decreased and the battery will be used up more quickly if you are recording in cold environment.

To Save Battery Power

Turn the STANDBY switch on the camcorder down when not recording to save battery power. **[a]**
A smooth transition between scenes can be made even if recording is stopped and started again. While positioning the subject, selecting an angle, or looking at the viewfinder, the lens moves automatically and the battery is used. The battery is also used when a cassette is inserted or removed.

When to Replace the Battery Pack

While you are using your camcorder, the remaining battery indicator decreases gradually as battery power is used up.

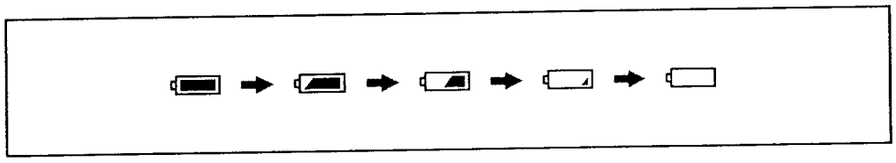

When the remaining battery indicator reaches the lowest point, the indicator appears and starts flashing in the viewfinder. **[b]**
When the indicator in the viewfinder changes from slow flashing to rapid flashing while you are recording, set the POWER switch to OFF on the camcorder and replace the battery pack. Leave the tape in the camcorder to obtain smooth transition between scenes after the battery pack is replaced.

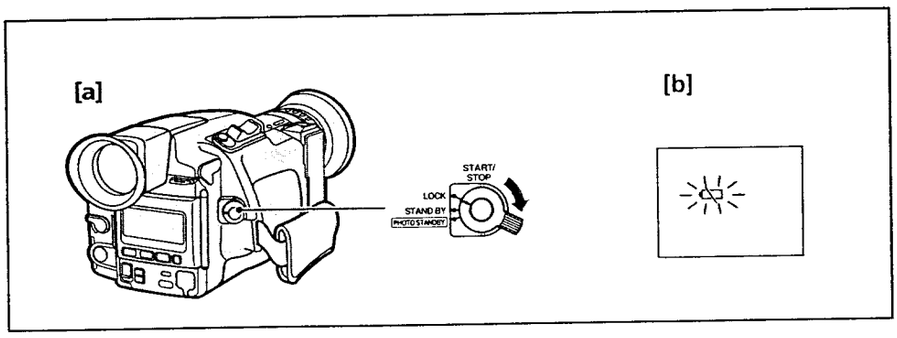

Notes on the Rechargeable Battery Pack

Caution

Never leave the battery pack under temperatures above 140 °F (60 °C), such as in a car parked in the sun or under direct sunlight.

The Battery Heats Up

During charging or recording, the battery pack heats up. This is caused by energy that has been generated and a chemical change that has occurred inside the battery pack. This is not cause for concern.

Battery Care

- Remove the battery pack from the camcorder after using the battery pack, and keep it in a cool place. When the battery pack is attached to the camcorder, a small amount of current flows to the camcorder even if the POWER switch is set to OFF, which shortens battery life.
- The battery pack is always discharging even when it is not in use after charging. Therefore, you should charge the battery right before using the camcorder.

The Switch on the Battery Pack

This switch is provided to help you remember the charging status of the battery. Set the switch to the "green mark" position after charging. (When detached from the Charge adaptor, the switch exposes the green mark. When detached from your camcorder, no mark is indicated.) [c]

[c]

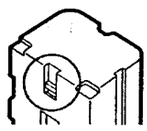

The Life of the Battery Pack

If the indicator flashes rapidly just after turning on the camcordrer with a fully charged battery pack, the battery pack should be replaced with a new fully charged one.

Charging Temperature

You should charge batteries at temperatures from 50°F to 86°F (from 10°C to 30°C). Lower temperatures require a longer charging time.

Tips for Using the Battery Pack

Notes on Charging

A Brand-new Battery

A brand-new battery pack is not charged. Before using the battery pack, charge it completely.

Recharge the Battery Pack Whenever You Like

You do not have to discharge it before recharging. If you charged the battery pack fully but you did not use it or a long time, it becomes discharged. So recharge the battery pack before use.

Notes on the Terminals

Keep the Terminals Clean

If a foreign object comes into the terminals, remove it with a soft stick and repeat installing and removing the battery pack. This improves the contact condition.

Be Sure to Observe the Following

- Keep the battery pack away from fire.
- Keep the battery pack dry.
- Do not open nor convert the battery pack.
- Do not expose the battery pack to any mechanical shock.

Maintenance Information and Precautions

Moisture Condensation

If the camcorder is brought directly from a cold place to a warm place, moisture may condense inside the camcorder, on the surface of the tape, or on the lens. If this happens, the tape may stick to the head drum and be damaged or the camcorder may not operate correctly. To prevent possible damage under these circumstances, the camcorder is furnished with moisture sensors. However, take the following precautions.

Inside the Camcorder

When ⊡ and ⏏ indicators flash in the viewfinder, moisture has condensed inside the camcorder. If this happens, none of the functions except cassette ejection will work.
Eject the cassette, turn off the camcorder, and leave it with the cassette compartment open for about 1 hour.
If the ⊡ indicator does not light up when you turn on the power, you can use the camcorder again.

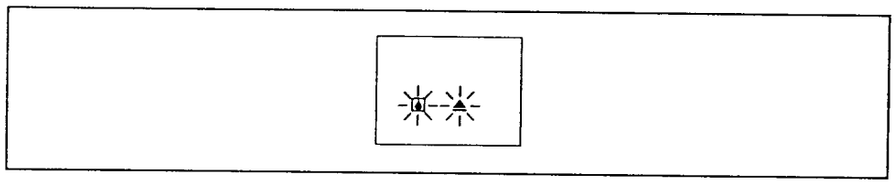

On the Surface of the Tape

If there is moisture on the surface of the tape, when you insert cassette and press a tape transport button (▷PLAY, etc.), the ⏏ indicator flashes in the viewfinder. If this happens, none of the functions except cassette ejection will work.
Eject the cassette and leave it for about 1 hour.
If the ⏏ indicator does not light up when you insert the cassette and press a tape transport button, you can use the camcorder again.

On the Lens

No indicator will appear, but the picture becomes dim. Turn off the power and do not use the camcorder for about 1 hour.

How to Prevent Moisture Condensation

When bringing the camcorder from a cold place to a warm place, put the camcorder in a plastic bag and allow it to adapt to room conditions over a period of time.
(1) Be sure to tightly seal the plastic bag containing the camcorder.
(2) Remove the bag when the air temperature inside it has reached the temperature surrounding it (after about 1 hour).

Removing Dust from Inside the Viewfinder

(1) While holding down the hook, slide the eyecup in the direction of the arrow and remove it out.
(2) Clean the surface with a commercially available blower.

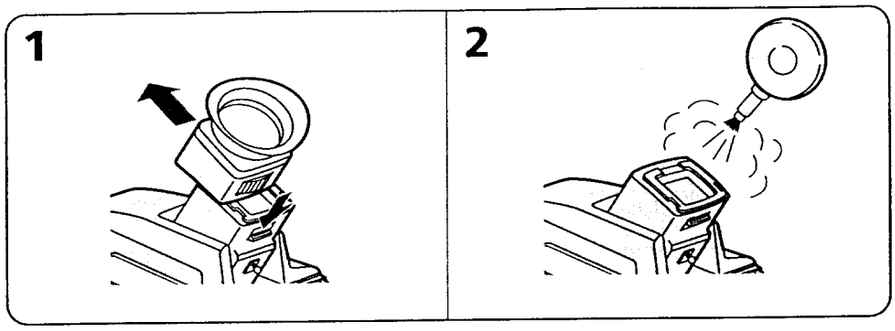

To reattach the eyecup

Do step 1 above in the reverse direction of the arrow.

Video Head Cleaning

To ensure normal recording and clear pictures, clean the video heads often. When the ⊗ indicator flashes in the viewfinder or mosaic noise appears on the playback picture or part of the previous picture remains, the video heads may be dirty.

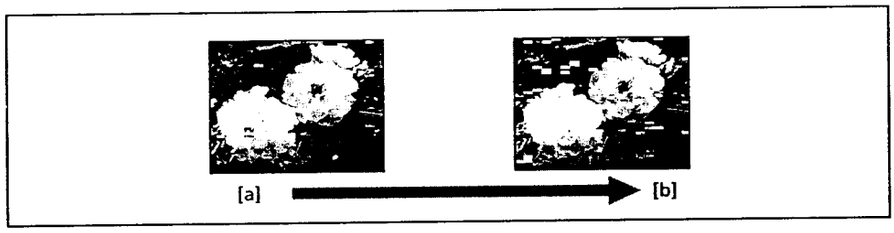

[a] Slight contamination
[b] Critical contamination
If this happens, clean the video heads with the Sony DVM12CL cleaning cassette (not supplied). After checking the picture, if it is still "noisy", repeat cleaning. (Do not repeat cleaning more than 5 times.)

Caution
Do not use a commercially available wet-type cleaning cassette. It may damage the video heads.

Note
If the DVM12CL cleaning cassette (not supplied) is not available in your area, consult your nearest Sony dealer.

Precautions

Camcorder Operation

- Operate the camcorder using 7.2 V (battery pack), or 6.5 V (AC power adaptor).
- For DC or AC operation, use only the accessories recommended in this manual.
- Should any solid object or liquid fall into the casing, unplug the camcorder and have it checked by your nearest Sony dealer before operating it any further.
- Avoid rough handling or mechanical shock. Be particularly careful of the lens.
- Keep the POWER switch set to OFF when not using the camera.
- Do not wrap up the camcorder and operate it since heat may build up internally.
- Keep the camcorder away from strong magnetic fields or mechanical vibration.

On Handling Tapes

- Do not insert anything into the small holes on the cassette.
- Do not open the tape protect cover or touch the tape.
- Avoid touching or damaging the terminals. To remove dust, clean the terminals with a soft cloth.

Camcorder Care

- When the camcorder is not to be used for a long time, disconnect the power source and remove the cassette. Periodically turn on the power, operate the CAMERA and VTR sections and play back a tape for about 3 minutes.
- Clean the camcorder body with a soft dry cloth, or a soft cloth lightly moistened with a mild detergent solution. Do not use any type of solvent which may damage the finish.

AC Power Adaptor

Charging

- Use only a lithium ion type battery.
- Charge the battery on a flat place without vibration.
- The battery will get hot during charging. However, this is normal.

Others

- Unplug the unit from the wall outlet when not in use for a long time. To disconnect the cord, pull it out by the plug. Never pull the cord itself.
- Do not operate the unit with a damaged cord or if the unit has been dropped or damaged.
- Do not bend the power cord forcibly, or put a heavy object on it. This will damage the cord and may cause a fire or an electrical shock.
- Be sure that nothing metallic comes into contact with the metal parts of the connecting plate. If this happens, a short may occur and the unit may be damaged.
- Always keep the metal contacts clean.
- Do not disassemble the unit.
- Do not apply mechanical shock or drop the unit.
- While the unit is in use, particularly during charging, keep it away from AM receivers and video equipment because it will disturb AM reception and video operation.
- The unit becomes warm while in use. This is normal.
- Do not place the unit in locations that are:
  - Extremely hot or cold
  - Dusty or dirty
  - Very humid
  - Vibrating

If any difficulty should arise, unplug the unit and contact your nearest Sony dealer.

Using Your Camcorder Abroad

Each country has its own electricity and TV color systems. Before using your camcorder abroad, check the following points:

Power Sources

You can use your camcorder in any country with the supplied AC power adaptor within 100 V to 240 V AC, 50/60 Hz. Use a commercially available AC plug adaptor, if necessary, depending on the design of the wall outlet.

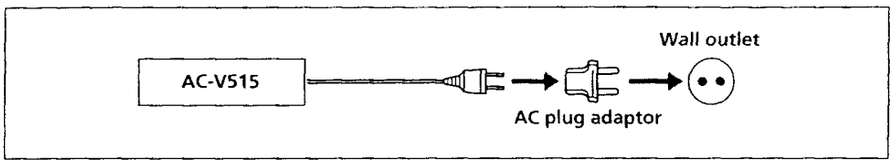

Difference in Color Systems

This camcorder is an NTSC system-based camcorder. If you want to view the playback picture on a TV, it must be an NTSC system based TV. When you want to use a PAL M system based TV, you will need an NTSC/PAL M trancoder. Check the following alphabetical list.

NTSC system countries
Bahama Islands, Bolivia, Canada, Central America, Chile, Colombia, Ecuador, Jamaica, Japan, Korea, Mexico, Peru, Surinam, Taiwan, the Philippines, the U.S.A., Venezuela, etc.

PAL system countries
Australia, Austria, Belgium, China, Denmark, Finland, Germany, Great Britain, Holland, Hong Kong, Italy, Kuwait, Malaysia, New Zealand, Norway, Portugal, Singapore, Spain, Sweden, Switzerland, Thailand, etc.

PAL M system country
Brazil

PAL N system countries
Argentina, Paraguay, Uruguay

SECAM system countries
Bulgaria, Czech Republic, France, Guyana, Hungary, Iran, Iraq, Monaco, Poland, Russia, Slovak Republic, Ukraine, etc.

Trouble Check

If you run into any problem using the camcorder, use the following table to troubleshoot the problem.

Camcorder

Power

Symptom	Cause and/or Corrective Actions
The power is not on.	• Insert the battery pack. (p. 8) • The battery is dead. → Use a charged battery pack. (p. 6) • Connect the AC power adaptor to a wall outlet. (p. 20)
The power goes off.	• While being operated in CAMERA mode, the camcorder has been in the Standby mode for more than 5 minutes. → Turn STANDBY down once and turn it up again. (p. 12)
The battery pack is quickly discharged.	• The battery is dead. → Use a charged battery pack. (p. 6) • The ambient temperature is too low. (p. 50) • Charge the battery pack again. (p. 6) • The battery pack is completely dead and cannot be recharged. → Use another battery pack. (p. 51)

Operation

Symptom	Cause and/or Corrective Actions
START/STOP does not operate.	• The tape is stuck to the drum. → Eject the tape. (p. 9) • Rewind the tape or use a new one. (p. 17) • Set the POWER switch to CAMERA. (p. 11) • The tab on the cassette is out (red). → Use a new tape or slide the tab. (p. 10) • Set the Standby switch to STANDBY. (p. 11)
The cassette cannot be removed from the holder.	• Insert the battery pack. (p. 8) • The battery is dead. → Use a charged battery pack or the AC power adaptor. (p. 6, 20)
No function except for cassette ejection works.	• Moisture condensation has occurred. → Remove the cassette and leave the camcorder for at least an hour. (p. 53)
The tape does not move when a tape transport button is pressed.	• Set the POWER switch to VTR. (p. 17) • Rewind the tape or use a new one. (p. 17) • The camcorder is updating the cassette memory data (The cassette memory mounted miniDV cassette only). → Eject the cassette after C MEMORY indicator disappears. (p. 9)
The STEADY SHOT function does not activate.	• Set STEADY SHOT to ON. (p. 40)

Symptom	Cause and/or Corrective Actions
The autofocus function does not activate.	• Set the FOCUS switch to AUTO. (p. 33) • Shooting condition is not good enough to focus automatically. → Focus manually. (p. 32)
D ZOOM mode in the menu system cannot be set to ON.	• Set the DIGITAL MODE to ZOOM. (p. 13)
The overlap or slide function does not activate.	• Set the DIGITAL MODE to OVERLAP. (p. 25)

Picture/Sound

Symptom	Cause and/or Corrective Actions
The image on the viewfinder screen is not clear.	• Adjust the viewfinder lens. (p.12)
The playback picture is not clear or cannot be monitored.	• Select the program position or input for the camcorder correctly on the TV. (p. 16)
A vertical band appears when a subject such as lights or a candle flame is shot against a dark background.	• The contrast between the subject and background is too high. The camcorder is not malfunctioning. → Change locations.
The picture is "noisy" or hardly visible.	• The video heads may be dirty. → Clean the heads using the Sony DVM12CL cleaning cassette (not supplied). (p. 54)
⊗ indicator flashes in the viewfinder.	• The video heads may be dirty. → Clean the heads using the Sony DVM12CL cleaning cassette (not supplied). (p. 54)
Battery remaining indicator does not indicates full ▬, when you insert the charged battery pack.	• The ambient temperature is too low.

Others

Symptom	Cause and/or Corrective Actions
The supplied Remote Commander does not work.	• Set the COMMANDER to VTR4 or ID in the menu system. (p. 22) • Something is blocking the infrared rays. → Remove the obstacle. • The batteries are dead. → Insert new ones. (p. 67)

AC Power Adaptor

Symptom	Cause and/or Corrective Actions
The POWER lamp does not light.	• Disconnect the AC power cord. After about one minute, try again. (p. 20)
The CHARGE lamp flashes.	• See the following chart.

When the CHARGE Lamp Flashes

Check through the following chart.

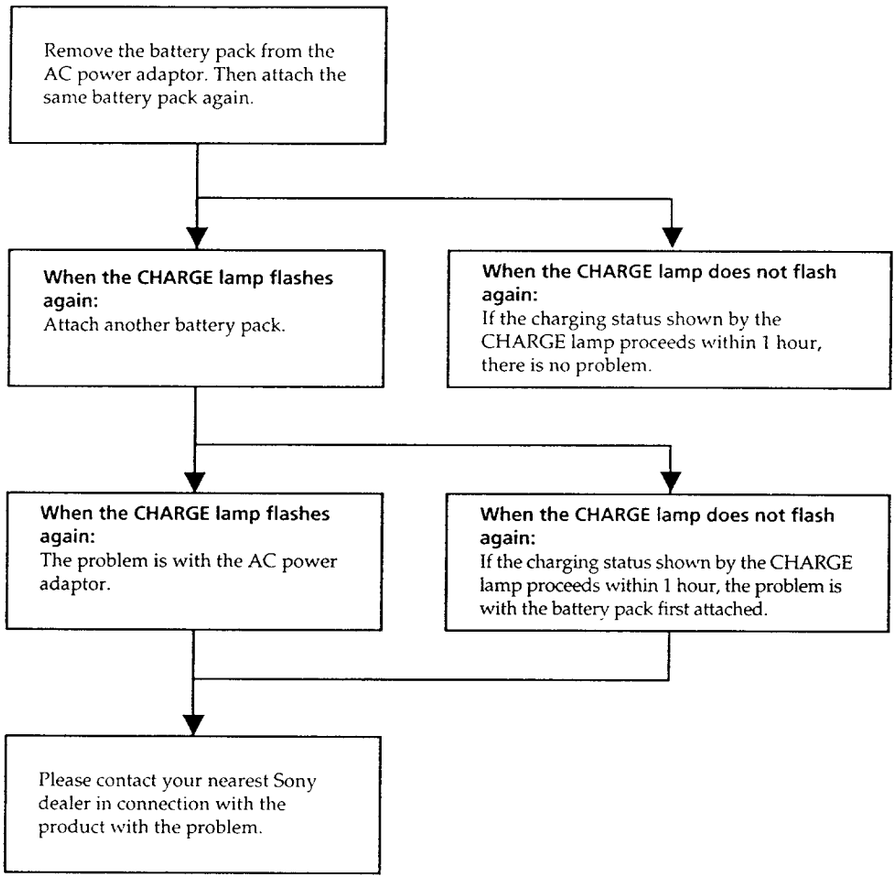

Specifications

Video Camera Recorder

System

Video recording system
Two rotary heads, Helical scanning system
Audio recording system
Rotary heads, PCM system
Video signal
NTSC color, EIA standards
Usable cassette
miniDV cassette with logo printed
Tape speed
Approx. $^{3}/_{4}$ inch (18.81 mm)/s
Recording time
1 hour (DVM60ME)
Playback time
1 hour (DVM60ME)
Fast forward/rewind time
Approx. 2 min. 30 s (DVM60ME)
Image device
1CCD (Charge Coupled Device)
Viewfinder
Electric viewfinder (color)
Lens
10x (optical)
f = $^{3}/_{4}$ to $2^{1}/_{2}$ inches (6.1 to 61 mm)
$1^{11}/_{16}$ to $16^{5}/_{8}$ inches (42 to 420 mm) when converted into a 35-mm still camera
Filter diameter $2^{1}/_{8}$ inches (52 mm)
TTL autofocus system
Inner focus wide macro system
Color temperature
Auto/Hold/Indoors(3200K)/Outdoors (5800K)
Minimum illumination
3 lx (F 1.6)
Illumination range
3 lx to 100,000 lx (recommended more than 100 lx)
Shutter speed control
1/4 to 1/4000

Input and output connectors

S video output
4-pin mini DIN
Luminance signal: 1 Vp-p, 75Ω, unbalanced, sync negative
Chrominance signal: 0.286 Vp-p, 75Ω, unbalanced
Video output
RCA pin jack, 1 Vp-p, 75Ω, unbalanced, sync negative
Audio output
RCA pin jacks (2: stereo L and R) 327 mV, (at load impedance 47 kΩ) impedance less than 2.2 kΩ
RFU DC OUT
Special mini-jack, DC 5 V
Headphones jack
Stereomini-jack (ø 3.5 mm)
LANC control jack
Stereomini-mini-jack (ø 2.5 mm)
MIC jack
Stereo minijack, 0.388 mV low impedance with 2.5 to 3 V DC output, impedance 6.8 kΩ (ø 3.5 mm)
DC IN
4-pin connector
DV IN/OUT
4-pin special connector

General

Power requirement
On battery mounting surface
7.2 V (battery pack)
6.5 V (AC power adaptor)
Average power consumption
7.9 W (camera recording)
Installation
Vertically, horizontally
Operating temperature
32 °F to 104 °F (0 °C to 40 °C)
Storage temperature
–4 °F to 140 °F (–20 °C to 60 °C)
Dimensions
Approx. $4^{3}/_{8} \times 4^{1}/_{2} \times 11$ inches (w/h/d) (110 × 114 × 278.5 mm)
Mass
Approx. 2 lb 10 oz (1.2 kg) excluding the battery pack, cassette
Approx. 3 lb 1 oz (1.4 kg) including the battery pack NP-720, lithium battery CR2025, cassette DVM60ME, and shoulder strap
Microphone
Electret condenser microphone, stereo type

AC Power Adaptor

Power requirements
100 – 240 V AC, 50/60 Hz
Power consumption
22 W
Output voltage
DC OUT: 6.5 V, 2 A in operating mode
Battery charge terminal: 8.4 V, 1.4 A in charging mode
Application
Sony battery pack NP-720 lithium ion type
Operating temperature/ Storage temperature
Same specifications as video camera recorder.
Dimensions
Approx. $2^{7}/_{8} \times 1^{3}/_{4} \times 3^{7}/_{8}$ inches (w/h/d) (72 × 44 × 96 mm) including projecting parts and controls
Mass
Approx. 10.6 oz (300 g)

Design and specification are subject to change without notice.

Identifying the Parts

Camcorder

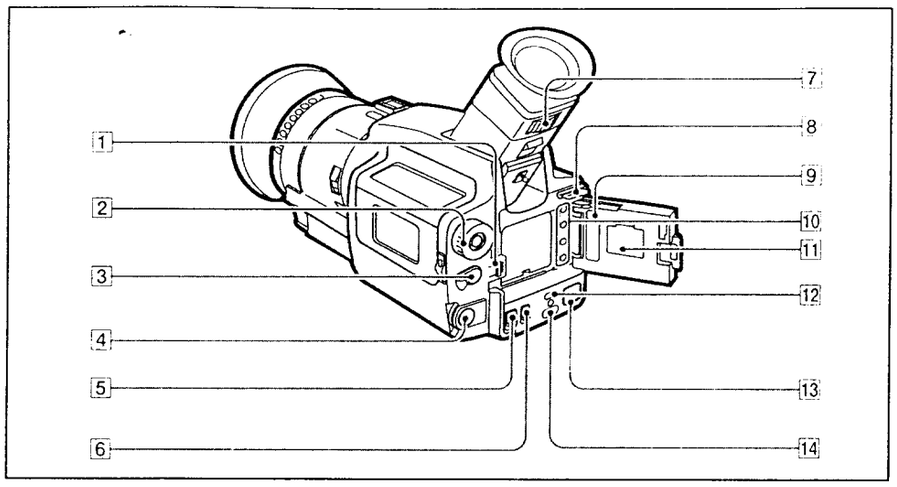

1 RELEASE knob (p. 8)
2 POWER switch (p. 11, 17)
3 HOLD/AUTO LOCK selector (p. 35, 36, 39)
4 EXPOSURE button and dial (p. 36)
5 OPEN knob (p. 8, 21, 40)
6 DIGITAL MODE switch (p. 13, 24, 25, 31)
7 Viewfinder lens adjustment ring (p. 12)
8 Hooks for shoulder strap (p. 65)
9 STEADY SHOT switch (p. 40)
10 Menu operation buttons (p. 21)
11 Lithium battery compartment (p. 47)
12 Camera recording/battery lamp (rear)
13 DV IN/OUT jack (p. 44)
14 Remote sensor (p. 69)

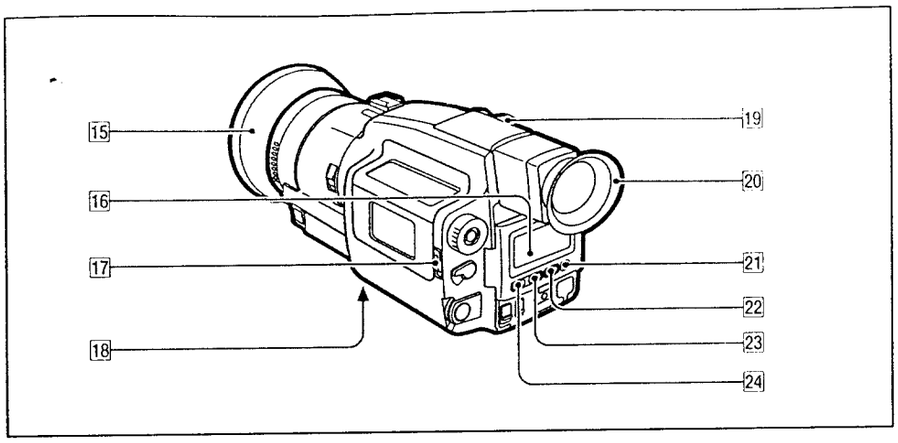

15 **Lens hood**
When you attach a wide teleconversion lens (not supplied), remove the lens hood.

16 **Display window (p. 71)**

17 **EJECT switch (p. 9)**

18 **Tripod receptacle (p. 14)**
Attach a tripod (not supplied) here.

19 **Zoom button (p. 13, 32)**

20 **Eyecup**
If you wear glasses or you cannot view the corners, fold back the eyecup.

21 **ZERO SET MEMORY button (p. 26)**

22 **DIGITAL EFFECT button (p. 31)**

23 **WHT BAL (white balance) button (p. 39)**

24 **PROGRAM AE button (p. 35)**

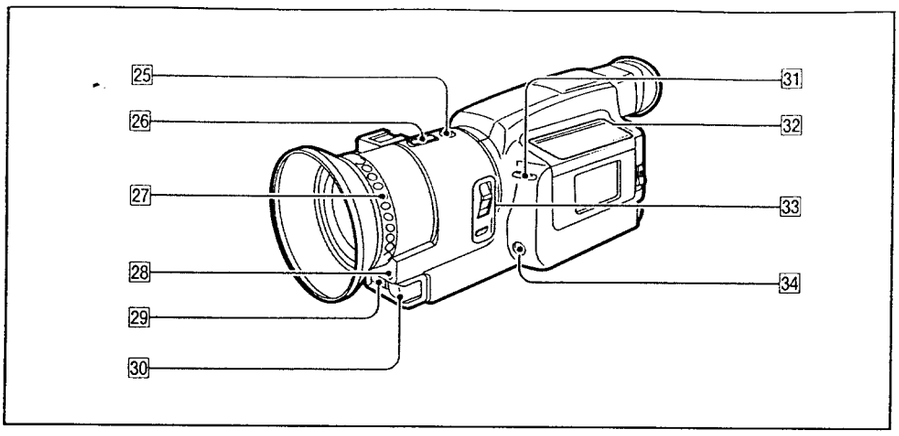

25 REC START/STOP button for low-position recording (p. 14)

26 EDITSEARCH buttons (p. 15)

27 Focus ring (p. 32)

28 Camera recording/battery lamp (front) (p. 22)

29 Remote sensor (p. 69)

30 Microphone

31 Hooks for shoulder strap (p. 65)

32 Tape transport buttons (p. 17, 18)

<◄II/II►> FRAME (direction select/frame-by-frame), I►SLOW (slow speed playback), □STOP, ◄◄REW (rewind), ▷PLAY (playback), ►►FF (fast-forward), IIPAUSE, ● REC (recording)

33 FOCUS switch and PUSH AUTO button (p. 32, 33)

34 FADER/OVERLAP button (p. 24, 25)

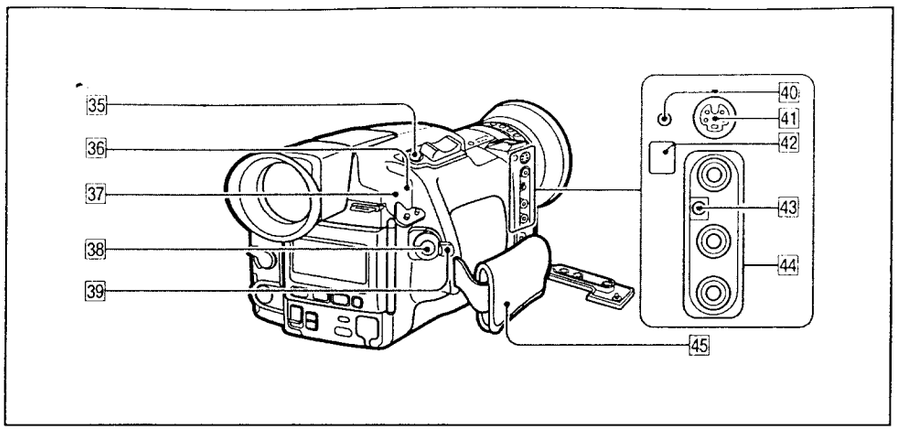

35 PHOTO button (p. 28)

36 LANC control jack
LANC stands for Local Application Control Bus System. The control jack is used for controlling the tape transport of video equipment and peripherals connected to it. This jack has the same function as the jack indicated as CONTROL L or REMOTE.

37 (headphones) jack (p. 17)

38 START/STOP button (p. 11)

39 Standby selector (p. 11, 28)

40 MIC (PLUG IN POWER) jack
Connect an external microphone (not supplied). This jack also accepts a "plug-in-power" microphone.

41 S VIDEO output jack (p. 16, 44)

42 DC IN jack (p. 20)

43 RFU DC OUT jack

44 Audio/Video output jacks (p. 16, 44)

45 Grip strap (p. 14)

Attaching the shoulder strap

Attach the supplied shoulder strap to the hooks for the shoulder strap (8 and 31 on page 61 and 63).

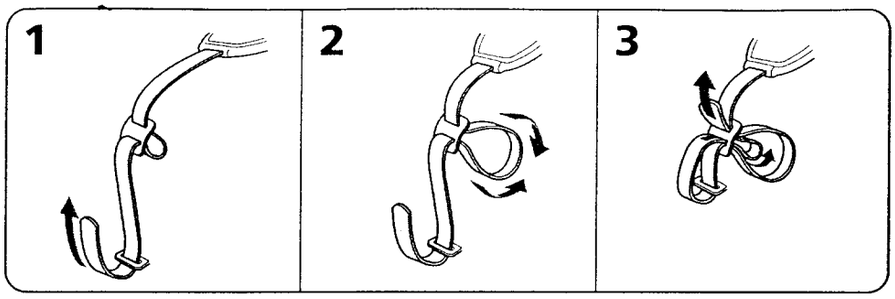

Remote Commander

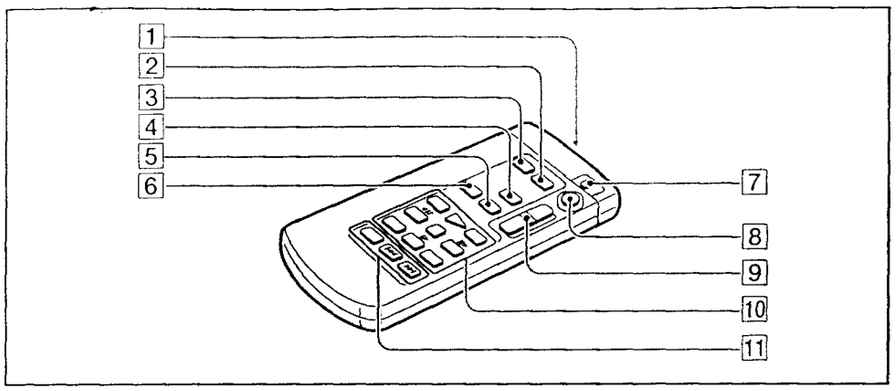

1 **Transmitter**
Point toward the remote sensor to control the camcorder after turning on the POWER switch on the camcorder.

2 **PRINT button (p. 28)**

3 **PHOTO button (p. 28)**

4 **ZERO SET MEMORY button (p. 26)**

5 **DATA CODE button (p. 43)**

6 **DISPLAY button (p. 18, 45)**

7 **VTR4/ID/HOLD selector (p. 68)**
Select "VTR4" or "ID" according to the camcorder's setting. Select HOLD to prevent the buttons from being accidentally pressed.

8 **START/STOP button (p. 11)**

9 **Zoom button (p. 13)**
The zooming speed is unchangeable on the Remote Commander.

10 **Tape transport buttons (p. 17, 18)**
◀◀REW (rewind), ▷PLAY (playback), ▶▶FF (fast-forward), □STOP, ◀II/II▶ (frame-by-frame), IIPAUSE, I▶SLOW (slow speed playback), x2 (double speed playback)

11 **SEARCH SELECT/I◁◁/▷▷I buttons (p. 41, 42)**

Preparing the Remote Commander

To use the Remote Commander, you must insert two size AA (R6) batteries. Use the supplied size AA (R6) batteries.

(1) Remove the battery cover from the Remote Commander.
(2) Insert both of the size AA (R6) batteries with correct polarity.
(3) Put the battery cover back onto the Remote Commander.

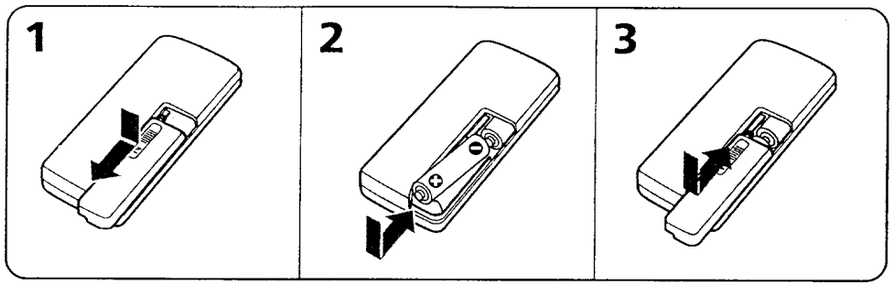

To avoid damage from possible battery leakage
Remove the batteries when you will not use the Remote Commander for a long time.

Using the Remote Commander

Make sure that the COMMANDER mode is not set to OFF in the menu system.

About the ID of the Remote Commander

You can avoid remote control misoperation from other VCRs by setting the VTR4/ID/HOLD selector to ID. Use the supplied Remote Commander when you set the VTR4/ID/HOLD selector to ID. When you use Remote Commander for the first time, you need to register the ID as follows:

(1) Slide OPEN and open the battery cover.
(2) Press MENU to display the menu in the viewfinder.
(3) Press ↑ or ↓ to select COMMANDER, then press EXECUTE.
(4) Press ↑ or ↓ to select ID SET.
(5) Set the VTR4/ID/HOLD selector on the Remote Commander to ID.
(6) Press STOP on the Remote Commander.
After the beep sound, the ID of the Remote Commander is registered, and the COMMANDER is set to ID in the menu system.
(7) Press MENU to erase the menu display.

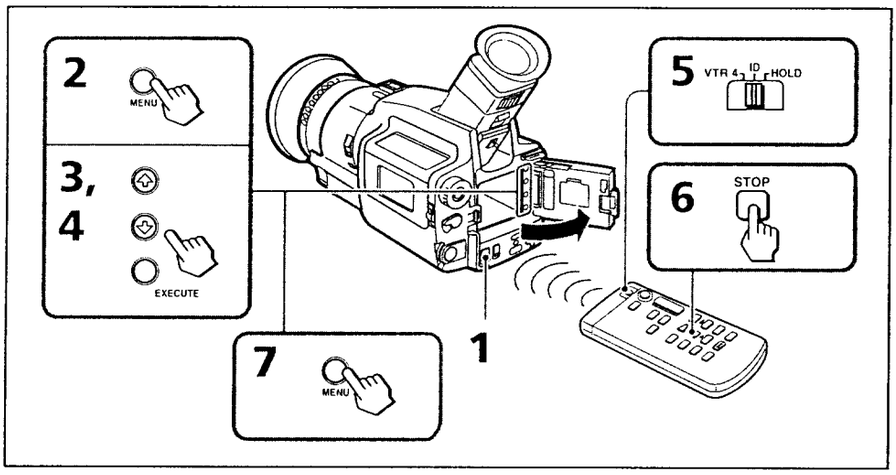

When the BEEP is set to OFF in the menu system
The beep does not sound at step 6.

Remote Control Direction

Aim the Remote Commander to the remote sensor.
The operative range of the Remote Commander is about 16 feet (5 m) indoors. Depending on the angle, Remote Commander may not activate the camcorder.

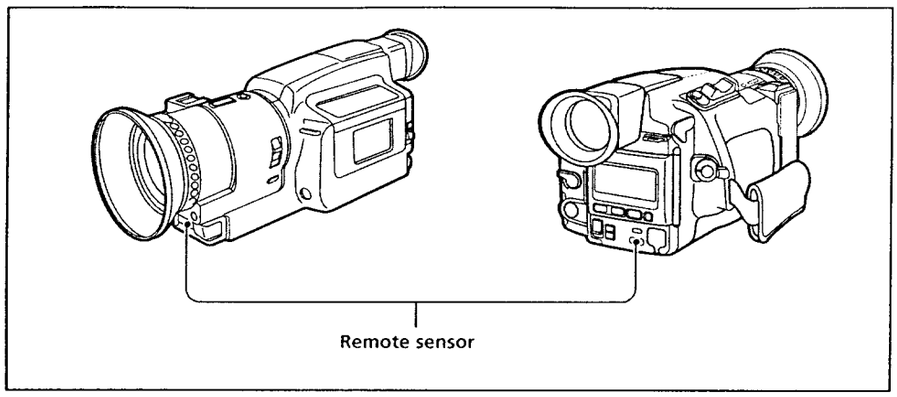

Notes on the Remote Commander

- Keep the remote sensor away from strong light sources such as direct sunlight or illumination. Otherwise, the remote control may not be effective.
- Be sure that there is no obstacle between the remote sensor and the Remote Commander.
- This camcorder works at commander mode VTR 4 or ID. The commander modes (VTR 4 or ID) are used to distinguish this camcorder from other Sony VCRs to avoid remote control misoperation. If you use another Sony VCR at commander mode ID, we recommend you change the commander mode or cover the remote sensor of the VCR with black paper.
- You need to register the Remote Commander's ID to the camcorder only once. Set the ID in the menu system and you can use the Remote Commander with the HOLD switch set to "ID".

To Watch the Demonstration

You can watch a brief demonstration of pictures with various functions, such as fade-in/fade-out.
If the demonstration appears when you turn on the camcorder for the first time, exit the Demo mode to use your camcorder.

To enter Demo mode

(1) Eject the cassette and turn the POWER switch to VTR.
(2) Turn STANDBY up.
(3) While holding down PLAY▷, turn the POWER switch to CAMERA. Demonstration starts. The demonstration stops when you insert the cassette.
Note that once you enter Demo mode, this mode is retained as long as the lithium battery is in place. Therefore, demonstration starts automatically 10 minutes later every time you turn the POWER switch to CAMERA, or after you eject the cassette.

To exit Demo mode

(1) Turn the POWER switch to VTR.
(2) Turn STANDBY up.
(3) While holding down STOP□, turn the POWER switch to CAMERA.

In the Viewfinder

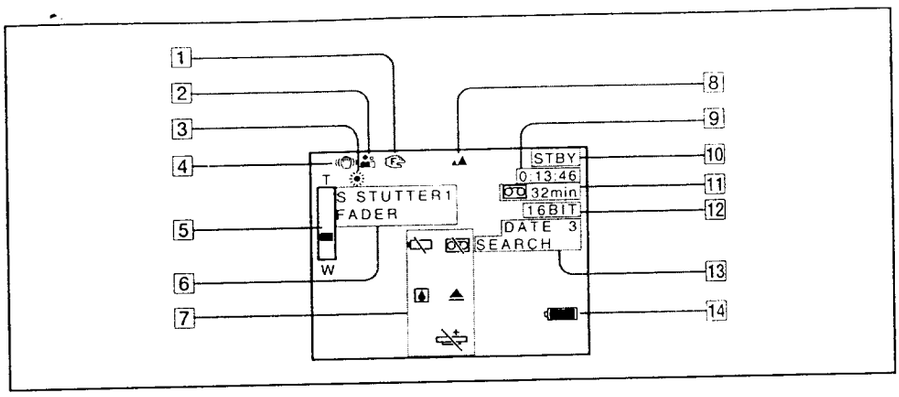

1 Manual focus indicator (p. 32)

2 PROGRAM AE mode indicator (p. 34)

3 White balance indicator (p. 38)

4 Steady shot indicator (p. 40)

5 Zoom/Exposure indicator (p. 13, 36)

6 Digital effect/Fading indicators (p. 24, 25, 31)

7 Warning indicators (p. 72)

8 Infinity/near indicator (p. 32)

9 Time code/tape counter (p. 12)

10 Tape transport mode (p. 11)

11 Remaining tape indicator (p. 11)

12 Audio mode indicator (p. 73)

13 PHOTO/INTERVAL/FRAME REC recording, search mode or cassette memory indicators (p. 28, 29, 30, 41)

14 Remaining battery indicator (p. 50)

In the Display Window

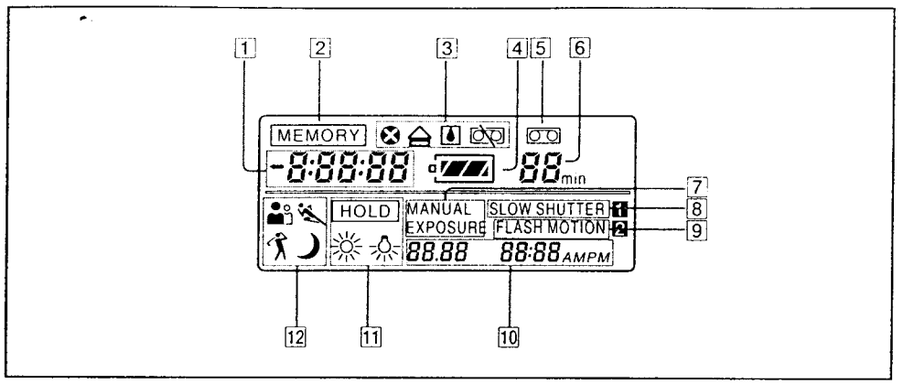

1 Time code/tape counter (p. 12)

2 MEMORY indicator (p. 26)
Same as ZERO SET MEMORY indicator in the viewfinder.

3 Warning indicators (p. 72)

4 Remaining battery indicator (p. 51)

5 Lights up while cassette is inserted

6 Remaining tape indicator

7 MANUAL EXPOSURE indicator (p. 36)

8 SLOW SHUTTER mode indicator (p. 31)

9 FLASH MOTION mode indicator (p. 31)

10 Date and time

11 White balance indicators (p. 38)

12 PROGRAM AE mode indicators (p. 34)

Warning Indicators

If indicators flash in the viewfinder, or a caution lamp on the camcorder flashes, check the following:
♪: You can hear the beep sound when the BEEP is set to ON (p. 22).

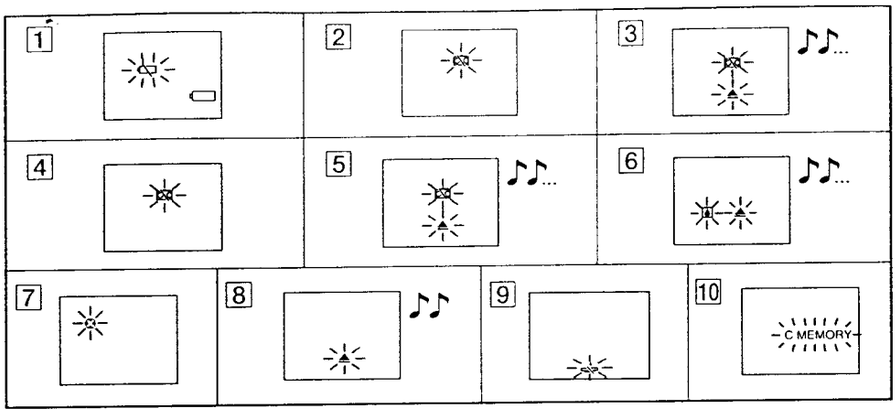

1 **Battery Remaining**
Slow flashing: The battery is weak.
Fast flashing: The battery is dead.

2 **The tape is near the end.**

3 **The tape has run out.**
Fast flashing

4 **No tape has been inserted.**

5 **The tab on the tape is out (red). (p. 10)**
Slow flashing

6 **Moisture condensation has occurred. (p. 53)**

7 **The video heads may be contaminated. (p. 55)**

8 **Some other trouble has occurred.**
Eject the cassette. If it remains lit, disconnect the power source and contact your Sony dealer or local authorized facility.

9 **The lithium battery is weak or the lithium battery is not installed. (p. 46)**
This indicator flashes five times when the power is turned on, then disappears.

10 **Updating the cassette memory data. Use after C MEMORY indicator disappears.**
The cassette compartment automatically lifts up and opens after the indicator disappears.

Glossary

Audio mode
The area on the tape where audio signals are recorded. There are two modes on DV format:
- 12-bit mode which records two stereo sounds.
- 16-bit mode which records a stereo sound with high quality.

The number of audio tracks depend on the selected mode.
This camcorder records with 12-bit mode only and can play back a tape recorded with both modes.
Though the DV recording system records two stereo sounds to stereo 1 and 2, this camcorder records the sound to stereo 1 only. You can adjust the playback sound balance between stereo 1 and 2 (p. 23).

Cassette memory (p. 41)
Cassette memory-mounted DV format cassette can store:
– Index information such as recorded date or time,
– Standard tape information that can also be stored on a DV format cassette lacking cassette memory, etc.

DV format
Newly developed consumer digital VCR format. For higher quality pictures and sound, video and audio signals are recorded on a tape as digital signals.

ID-2 system
ID-2 system records a copyright control signal to provide copyright protection of software when using the AV connecting cable.

Iris (p. 36)
Same as lens diaphragm. Adjustable lens-opening mechanism.

NTSC system (p. 56)
TV color system standard used in the USA and other parts of the world. An NTSC-recorded tape cannot be played back on the PAL or SECAM system VCR.

PROGRAM AE (p. 34)
The selectable recording mode to fit the subject or shooting situation
In this camcorder, five PROGRAM AE modes (auto mode is included) are selectable.

Remote Commander mode (p. 68)
The type of Remote control signal. There are five types (VTR1, VTR2, VTR3, VTR4, and ID) to prevent misoperation between the Remote Commanders of Sony video products. Select VTR4 or ID to control this camcorder. Normally select VTR4, and select ID to prevent misoperation.

RFU adaptor (p. 16)
Converts video and audio signals into a television wave signal to playback a picture at a TV program position.

S video jack (p. 16)
Separates the video signal into chrominance and luminance (black and white) signals to get a clear picture.

Standby mode (p. 12)
The camcorder is ready to start recording, recording standby mode. To set standby mode, turn STANDBY up.

Time code (p. 12)
The time code indicates the frame-by-frame position of the tape as a serial number of hour, minute, second, and frame. As the picture and counter reading are identical, you can locate a desired scene precisely with the counter.
This camcorder uses the drop frame mode which adjusts the difference between the logical time code (running at 30 frames/s) and real NTSC system time code (running at 29.97 frames/s) so that the two are in sync.

White balance (p. 38)
Adjusts the color balance so that white subjects look white. In this camcorder, automatic adjustment, HOLD, ☀(outdoor), and ☼(indoor) are selectable.

Index

A, B

AC power adaptor 6, 20
Adjusting viewfinder 12
Audio balance 23
A/V connecting cable 16
Battery lamp 50
Battery pack 6
Beep sound 12
Brightness 22

C

Camera recording 11
Cassette memory 41
Charging battery 6
Cleaning video heads 54
Clock set 48
Close ups 33
Color intensity 22
COMMANDER 22
Connection 16
Cut recording 30

D

DATA CODE 43
Date/time 48
Display window 71
Double speed playback 18
DV connecting cable 44
Digital zooming 13

E, F, G

Editing 44
EDITSEARCH 15
EJECT 9
Eyecup 62
Exposure 36
Fader 24
Fast-forward 17
Flash picture 31
Focus 32
Frame-by-frame 18

H, I, J, K

Headphones 17
High-speed shutter 34
ID number 22
ID system 73
Interval recording 29
Iris 36

L, M, N

LANC 64
Lithium battery 46
Menu system 21
MIC (microphone) jack 64

O, P, Q

Overlap 25
Photo recording 28
Playback on TV 17
Playback pause 18
Portrait 34
Power sources 19
PROGRAM AE 34

R

Recording lamp 22
Rec. Review 15
Remote Commander 66
Rewind 17
RFU adaptor 16

S

Shoulder strap 65
Slide 25
Slow shutter 31
Sports 34
Standby mode 12
Steady shot 40
Supplied accessories 5
S video connecting cable 16

T,U,V

Time code 12
Tripod mounting 14
Trouble check 57
Twilight 34
Viewfinder 12, 70
Video printer 28
VTR 4 68

W,X,Y,Z

Warning 72
White balance 38
ZERO SET MEMORY 26
Zoom 13