SONY

2003©Sony Corporation Printed in Japan
"SONY" is a registered trademark of Sony Corporation.
"QUALIA" is a trademark of Sony Corporation.
4-099-345-11(1)

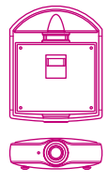

Owner's Guide

QUALIA 004

Owner's Record

The model and serial numbers are located at the bottom of the projector. Record these numbers in the spaces provided below. Refer to them whenever you call upon your Sony dealer regarding this product.

Model No. _____

Serial No. _____

WARNING

To prevent fire or shock hazard, do not expose the unit to rain or moisture.
To avoid electrical shock, do not open the cabinet. Refer servicing to qualified personnel only.

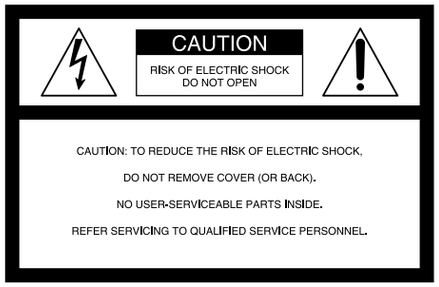

This symbol is intended to alert the user to the presence of uninsulated "dangerous voltage" within the product's enclosure that may be of sufficient magnitude to constitute a risk of electric shock to persons.

This symbol is intended to alert the user to the presence of important operating and maintenance (servicing) instructions in the literature accompanying the appliance.

For customers in the USA
If you have any questions about this product, you may contact:
Sony Electronics Inc.
Attn: Business Information Center (BIC)
12451 Gateway Boulevard
Ft. Myers, Florida 33913
Telephone No.: 800-686-7669
The number below is for FCC related matters only.

Declaration of Conformity
Trade Name: SONY
Model No.: Q004-R1
Responsible Party: Sony Electronics Inc.
Address: 680 Kinderkamack Road, Oradell NJ 07649 U.S.A.
Telephone No.: 201-930-6972

This device complies with Part 15 of the FCC Rules.
Operation is subject to the following two conditions: (1) This device may not cause harmful interference, and (2) this device must accept any interference received, including interference that may cause undesired operation.
This equipment has been tested and found to comply with the limits for a Class B digital device, pursuant to Part 15 of the FCC Rules. These limits are designed to provide reasonable protection against harmful interference in a residential installation. This equipment generates, uses, and can radiate radio frequency energy and, if not installed and used in accordance with the instructions, may cause harmful interference to radio communications. However, there is no guarantee that interference will not occur in a particular installation. If this equipment does cause harmful interference to radio or television reception, which can be determined by turning the equipment off and on, the user is encouraged to try to correct the interference by one or more of the following measures:

- Reorient or relocate the receiving antenna.
- Increase the separation between the equipment and receiver.
- Connect the equipment into an outlet on a circuit different from that to which the receiver is connected.
- Consult the dealer or an experienced radio/TV technician for help.

You are cautioned that any changes or modifications not expressly approved in this manual could void your authority to operate this equipment.

For customers in Canada
This Class B digital apparatus complies with Canadian ICES-003.

The socket-outlet should be installed near the equipment and be easily accessible.

AVERTISSEMENT

Afin d'éviter tout risque d'incendie ou d'électrocution, n'exposez pas cet appareil à la pluie ou à l'humidité.
Afin d'éviter tout risque d'électrocution, n'ouvrez pas le châssis. Confiez l'entretien uniquement à un personnel qualifié.

Pour les utilisateurs au Canada
Cet appareil numérique de la classe B est conforme à la norme ICES-003 du Canada.

La prise doit être près de l'appareil et facile d'accès.

Precautions

On safety

- Check that the operating voltage of your unit is identical with the voltage of your local power supply.
- Should any liquid or solid object fall into the cabinet, unplug the unit and have it checked by qualified personnel before operating it further.
- Unplug the unit from the wall outlet if it is not to be used for several days.
- To disconnect the cord, pull it out by the plug. Never pull the cord itself.
- The wall outlet should be near the unit and easily accessible.
- The unit is not disconnected from the AC power source (mains) as long as it is connected to the wall outlet, even if the unit itself has been turned off.
- Do not look into the lens while the lamp is on.
- Do not place your hand or objects near the ventilation holes. Air ventilated from the unit may be hot.

On preventing internal heat build-up

After you turn off the power with the I/⏻ (on/standby) switch, do not disconnect the unit from the wall outlet while the cooling fan is still running.

Caution
The projector is equipped with intake ventilation holes and exhaust ventilation holes. Do not block or place anything near these holes as internal heat build-up may occur, causing picture degradation or damage to the projector.

On repacking

Save the original shipping carton and packing material; they will come in handy if you ever have to ship your unit. For maximum protection, repack your unit as it was originally packed at the factory.

Table of Contents

Overview

Bring out the fascination of a movie theater 8

Identification of parts 18

Projecting Images

Projecting images 26

To turn off the power 29

Adjustments and Settings Using the Menu

Using the menu 30

PICTURE SETTING menu 32

PICTURE MODE 32

ADJUST PICTURE 33

INPUT SETTING menu 36

ADJUST SIGNAL 36

AUTO WIDE SETTING 37

SET SETTING menu 46

MENU SETTING menu 48

INSTALL SETTING menu 49

INFORMATION menu 51

ImageDirector 52

Features 52

Operating system environment for ImageDirector 52

Installing ImageDirector 53

Uninstalling ImageDirector 54

Installation/Connections

Notes for installation 56
Unsuitable installation 56
Improper use 57
Installing the projector 58
Floor installation 58
Ceiling installation 60
Connections 64

Operations Using the Network

Operating the projector from a computer 68
Accessing the projector from a computer 68
Checking the status of the projector 68
Controlling the projector from a computer 69
Setting up the projector 69

Maintenance

Lamp and filter maintenance 74
Replacing the lamp/air filter 74
Note for maintaining good performance 75
Troubleshooting 76
Power 76
Picture 77
Remote 78
Caution messages 78
Warning messages 79
Information panel display 80
ImageDirector 81

Additional Information

Warranty card and after-sale services 82
Specifications 83
Dimensions 86
Index 88

The pictures used as examples in this “Owner’s Guide” are still images, and are not actual images using this projector.

Identification of parts

Front/Top

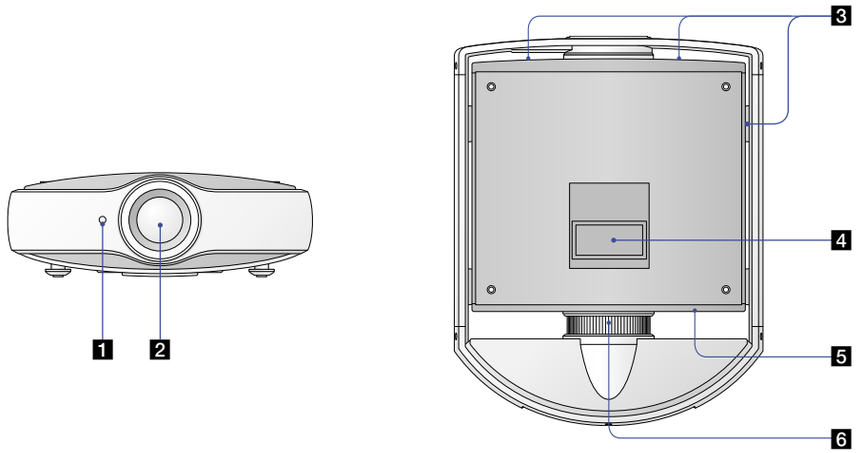

Rear/Bottom

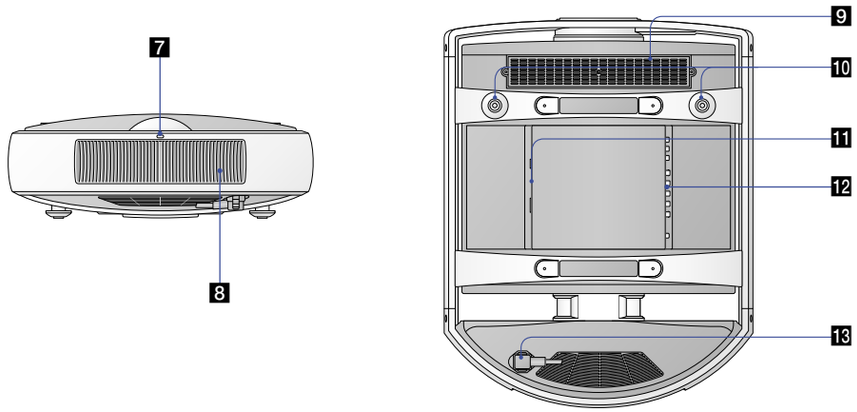

Front/Top

1 Front remote detector (SIRCS receiver)

2 Lens/Lens protector

3 Ventilation holes

Note on ventilation holes (intake/exhaust)

- Do not place anything near the ventilation holes as this may cause internal heat build-up.
  Placing your hand near the ventilation holes may cause burn injuries.

4 Information panel display
Displays the status of the projector.

5 Control panel
A control panel is located in the unit. You can open the control panel by pressing the button beside it.

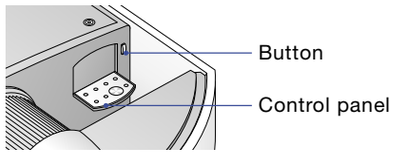

For details, see “Control panel” on page 20.

6 Pure xenon lamp

Rear/Bottom

7 Rear remote detector (SIRCS receiver)

8 Ventilation holes (exhaust)

9 Ventilation holes (intake)/Air filter

10 Adjusters
When a picture is projected on an exterior screen, adjust the picture using these adjusters. The picture moves up as you turn them clockwise and moves down as you turn them counterclockwise.

11 Connector panel (Right side)
For details, see “Connector panel” on page 66.

12 Connector panel (Left side)
For details, see “Connector panel” on page 64.

13 AC IN socket
Connect the AC power cord. To avoid unplugging the AC power cord accidentally, attach the supplied plug holder.

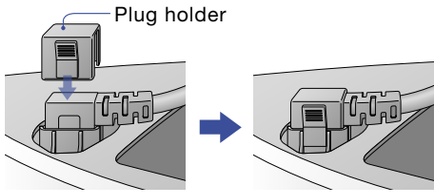

Notes

- Make sure that the AC power cord is connected properly.
- Attach the plug holder to avoid unplugging the AC power cord accidentally. Also, the plug holder prevents the AC power cord from becoming clogged with dust.
- For safety, use the AC power cord supplied with the unit.

continued ···▸

Control panel

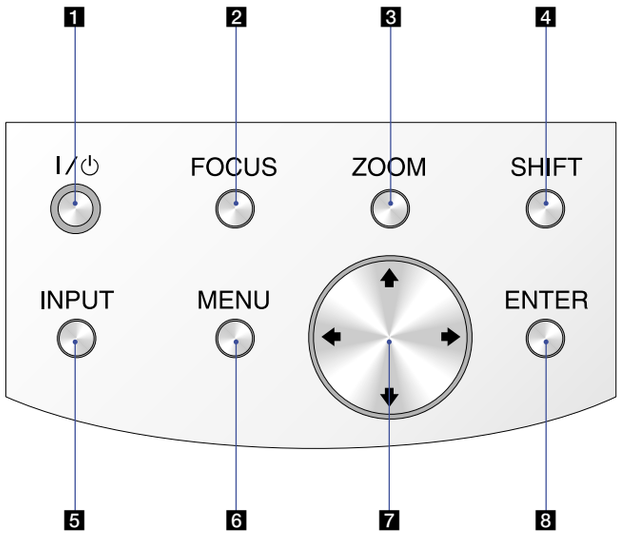

Location of the control panel

The control panel is located on the rear of the projector as shown below.

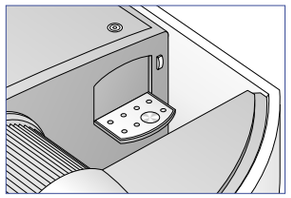

1 I/⏻ (on/standby) button
Turns the projector on when the projector is in the standby mode.
To turn off the projector, press the I/⏻ button twice or press and hold the I/⏻ button for about one second according to the indications on the screen.
For details on steps for turning off the power, see “To turn off the power” on page 29.

2 FOCUS button
Adjusts the picture focus using the arrow buttons.

3 ZOOM button
Adjusts the size of the picture using the arrow buttons.

4 SHIFT button
Adjusts the vertical position of the picture using the arrow buttons.

5 INPUT button
Selects the input signal. Each time you press the button, the input signal switches cyclically as follows:

→ INPUT-A → INPUT-B → DVI → HDMI → VIDEO → S-VIDEO →

6 MENU button
Displays the on-screen menu. Press again to clear the menu.

7 ↑/↓/←/→ (arrow) buttons
Select a menu or make various adjustments.

8 ENTER button
Enters the settings of items in the menu.

continued ···▸

Remote

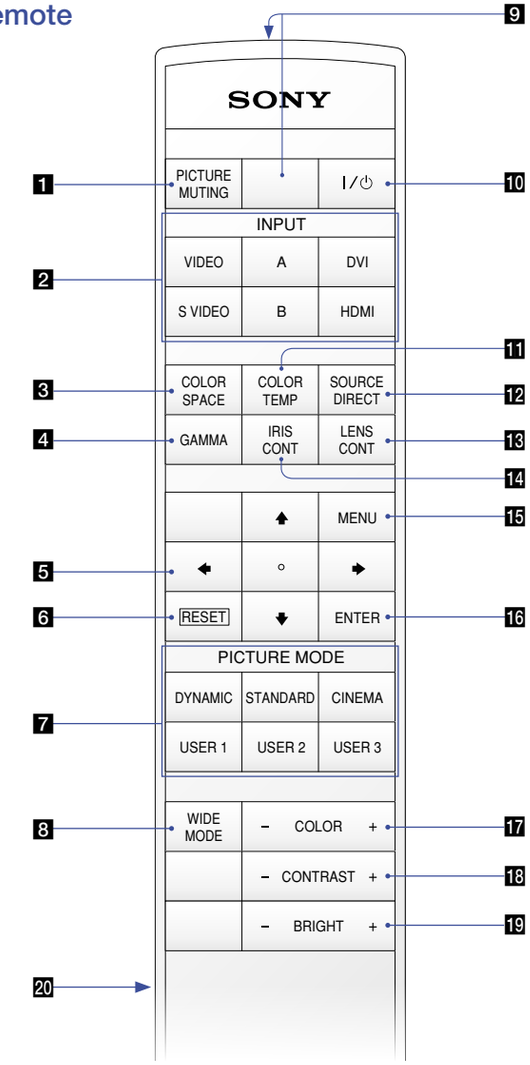

Indicators on the buttons light up if you shake or tilt the remote. The indicators are turned off automatically if you do not move the remote for about 20 seconds.
Buttons which have the same names as those on the control panel function identically.

1 PICTURE MUTING button
Turns off the picture. Press again to restore the picture.

2 INPUT buttons
Select the input signal.
VIDEO:
For the video signal of equipment connected to the projector's VIDEO jack.
S VIDEO:
For the video signal of equipment connected to the projector's S VIDEO jack.
A:
For the video signal of equipment connected to the projector's INPUT A connectors.
B:
For the video signal of equipment connected to the projector's INPUT B connectors.
DVI:
For the video signal of equipment connected to the projector's DVI-D connectors.
HDMI:
For the video signal of equipment connected to the projector's HDMI connectors.

3 COLOR SPACE button
Each time you press this button, the "Color Space" setting changes between "Normal" and "Wide."

4 GAMMA button
Selects the projector's gamma value from settings you made using "ImageDirector" (see page 52). Each time you press this button, the "Gamma Correction" setting changes cyclically as follows: "Off," "Gamma1," "Gamma2," "Gamma3."

5 ↑/↓/←/→ (arrow) buttons

6 RESET button
Resets items that have been adjusted to their factory preset values. The button activates while the menu is displayed or the items are adjusted (displayed).

7 PICTURE MODE buttons
DYNAMIC:
Enhances picture contrast and sharpness.
STANDARD:
Recommended for normal viewing conditions. Select this if you encounter roughness when viewing the picture with "Dynamic."
CINEMA:
Recommended when viewing a movie.
USER 1~3:
Adjust the quality of the picture to suit your taste and store the settings. For details, see "PICTURE MODE" in the PICTURE SETTING menu on page 32.

8 WIDE MODE button
Each time you press this button, the "Wide Mode" setting changes cyclically as follows: "Full," "Normal," "Wide Zoom," "Zoom," "Subtitle" (see page 40).

9 Infrared transmitter

10 I/⏻ button
Turns the projector on when the projector is in standby mode. To turn off the projector, press the I/⏻ button twice or press and hold the I/⏻ button for about one second according to the indications on the screen.

11 COLOR TEMP button
Each time you press this button, the "Color Temp" setting changes cyclically as follows: "High," "Middle," "Low," "Custom1," "Custom2," "Custom3."
For details, see page 34.

12 SOURCE DIRECT button
Reproduces a faithful picture from the HD (High Definition) input signal.

13 LENS CONT button
Each time you press this button, the "Lens Control" setting changes cyclically as follows: "Focus," "Zoom," "Shift." You can adjust each setting by pressing the arrow buttons.

14 IRIS CONT button
Emphasizes the contrast during projection. Each time you press this button, the "Iris Control" setting changes cyclically as follows: "Off," "1," "2."

15 MENU button
Displays the menu.

16 ENTER button
Enters the settings of items in the menu.

17 COLOR +/– button
Adjusts the intensity of the color. The intensity increases as you press the + button and decreases as you press the – button.

18 CONTRAST +/– button
Adjusts the contrast. The contrast increases as you press the + button and decreases as you press the – button.

19 BRIGHT +/– button
Adjusts the brightness. The brightness becomes brighter as you press the + button and darker as you press the – button.

20 CONTROL S OUT jack (minijack)
Connect to the CONTROL S IN jack on the projector when using it as a wired remote. Even when you use the remote as a wired remote, batteries must be inserted in the remote.

continued ···▸

Inserting batteries

1 Turn the screw counterclockwise using a coin, etc. to open the lid.

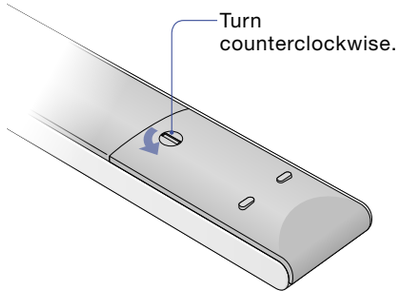

2 Insert the four size AAA (R03) batteries (supplied), taking care to match the polarities as shown below.

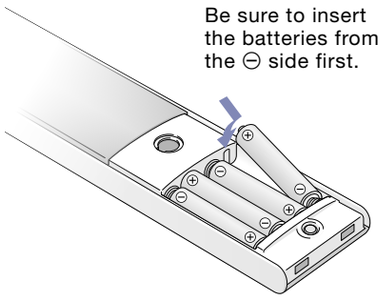

3 Replace the lid, then turn the screw clockwise to lock the lid.

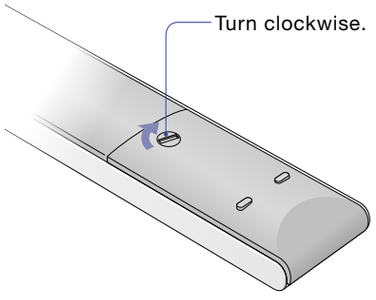

Notes on batteries

- Make sure that the battery polarity (orientation) is correct when inserting batteries.
- Do not mix an old battery with a new one, or mix different types of batteries.
- If you do not intend to use the remote for a long time, remove the batteries to avoid damage from battery leakage. If batteries have leaked, remove them, wipe the battery compartment dry and replace the batteries with new ones.

Notes on remote operation

- Make sure that there is nothing between the remote and the remote detector on the projector to obstruct the infrared beam.
- The operating range is limited. The shorter the distance between the remote and the projector is, the wider the angle within which the remote can control the projector.
- Even when you use the remote as a wired remote, batteries must be inserted in the remote.

Projecting images

Front

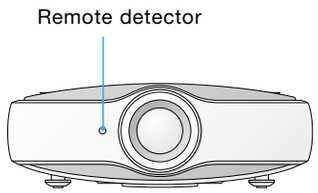

Rear

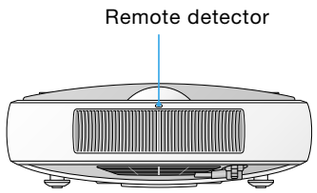

Remote

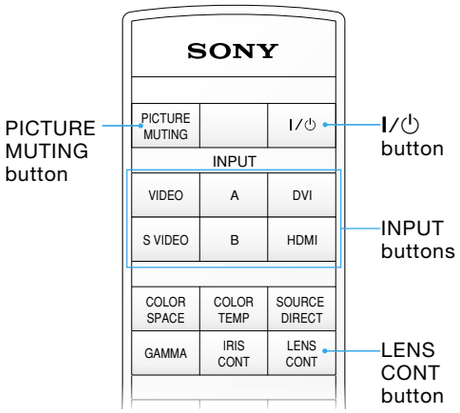

Control panel

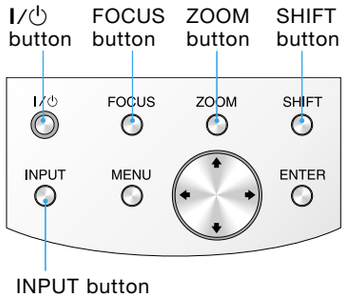

1 Press the I/⏻ button on the remote or on the control panel to turn the projector on.

2 Turn on any equipment connected to the projector.

3 Press the INPUT button to select the input source.

INPUT-A	Component equipment connected to the INPUT A connector on the projector
INPUT-B	Equipment connected to the INPUT B connector on the projector
DVI	Video equipment connected to DVI-D connector on projector
HDMI	Video equipment connected to HDMI connector on the projector
VIDEO	Video equipment connected to the VIDEO (VIDEO IN) jack on the projector
S-VIDEO	Video equipment connected to the S VIDEO (VIDEO IN) jack on the projector

4 Adjust the display settings below.

- Press the LENS CONT button on the remote repeatedly or the FOCUS button on the control panel to turn on the FOCUS setting display. Then, press the arrow buttons to adjust the focus.
- Press the LENS CONT button on the remote repeatedly or the ZOOM button on the control panel to turn on the ZOOM setting display. Then, press the arrow buttons to adjust the size of the picture.
- Press the LENS CONT button on the remote repeatedly or the SHIFT button on the control panel to turn on the SHIFT setting display. Then, press the arrow buttons to adjust the vertical position of the picture.

Note

- Looking into the lens when the projector is projecting an image may cause injury to your eyes.

To turn off the picture

Press the PICTURE MUTING button on the remote. To restore the picture, press the PICTURE MUTING button again.

continued ···▸

Selecting the screen projection mode

You can enjoy various screen projection modes according to the video signal received. For details on the available video signals, see page 42.
For details on operating the menu screen, see “Using the menu” on page 30.

1 Press the MENU button.
The menu display appears.

2 Press the ↑ or ↓ button to select the INPUT SETTING menu, then press the → or ENTER button.

3 Press the ↑ or ↓ button to select “Wide Mode,” then press the → or ENTER button.

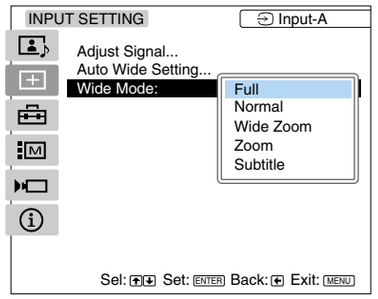

4 Press the ↑ or ↓ button to select the desired screen projection mode, then press the ← or ENTER button.

Notes on changing the screen projection mode

This projector provides you with various choices of screen projection mode. When selecting the screen projection mode, consider the following:

- Selecting a screen projection mode may provide a different look from that of the original image.
- If the projector is used for profit or for public viewing, modifying the original picture by switching aspects may constitute an infringement of the rights of authors or producers that are legally protected by copyright laws.

To turn off the power

1 Press the I/⏻ button on the remote or control panel.
“Power OFF?” appears.

Note

- The message disappears if you press any button except the I/⏻ button on the remote or on the control panel, or if you do not press any button for 5 seconds.

2 Press the I/⏻ button on the remote or on the control panel again.
The fan runs for several seconds to reduce internal heat build-up.

3 Confirm that the I/⏻ indicator light is lit in red.

If you operate the projector without viewing the screen

If you operate the projector from a location where you cannot view the on-screen message, you can also turn off the power by holding the I/⏻ button for about one second.

Note

- The internal circuitry of the Direct Power On/Off function may drive the fan for a short time even after the I/⏻ button is pressed and nothing is displayed on the information panel display.

Direct Power On/Off function

If you use a circuit breaker to turn the power for the entire system on and off, set the direct power on function to “On” (see page 50). When you turn the power off, you can also just unplug the power cord without pressing the I/⏻ button. The internal circuitry will cause the fan to automatically operate for a short while, even after the power cord is removed. However, if the unit has been on for less than 15 minutes, follow the procedure for turning off the power as described in “To turn off the power.”

Using the menu

The projector is equipped with an on-screen menu for making various adjustments and settings.
You can select the language to be used in the menu.

1 Press the MENU button.
The menu display appears.
The currently selected menu is shown in yellow.

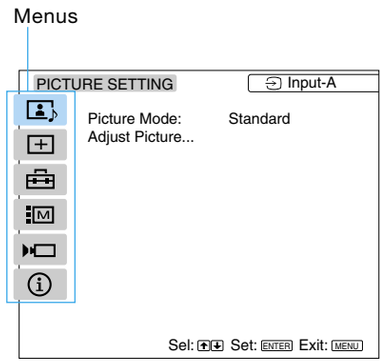

2 Use the ↑ or ↓ button to select a menu, then press the → or ENTER button
The selected menu appears.

3 Use the ↑ or ↓ button to select an item, then press the → or ENTER button.
The settings appear in a pop-up window or are displayed in the next level.

In a pop-up window

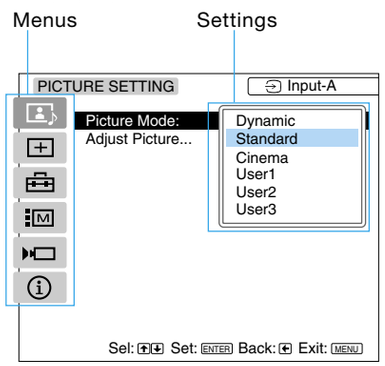

In the next level

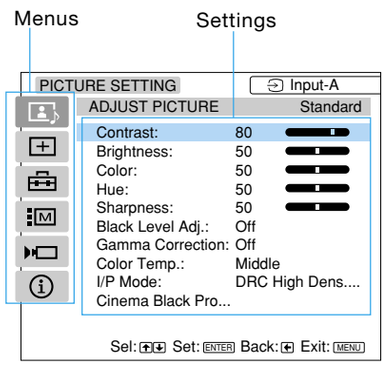

4 Select an item.
Use the ↑ or ↓ button to select an item, then press the → or ENTER button.

5 Adjust an item.
- When changing the adjustment level:
  To increase the value, press the ↑ or → button.
  To decrease the value, press the ↓ or ← button.
  Press the ENTER button to enter the value and return the previous screen.
- When changing the setting:
  Press the ↑ or ↓ button to change the setting.
  Press the ← or ENTER button to enter the value and return the previous screen.

For details on setting individual items, see the relevant menu pages.

To turn off the menu display

Press the MENU button.
The menu display disappears automatically if no button is pressed for about one minute.

To reset items that have been adjusted

Press the RESET button on the remote.
“Complete!” appears and the settings displayed on the screen will be reset to their factory preset values.
Items that can be reset are:
- “Contrast,”“Brightness,”“Color,”“Hue,” and “Sharpness,” in the PICTURE SETTING menu.
- “Dot Phase,”“H Size,”“Shift,”“V Position,” and “Title Area” in the INPUT SETTING menu.
- “V Keystone” in the INSTALL SETTING menu.

Retention of the settings

The settings are automatically stored in the projector’s memory.

PICTURE SETTING menu

PICTURE MODE

You can select the picture mode that best suits the type of program or your room's conditions.

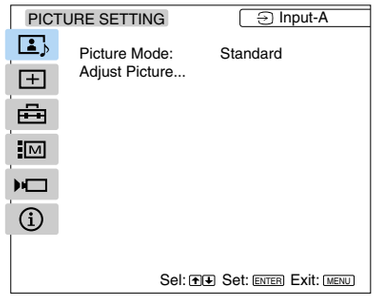

Dynamic:
Select this for enhanced picture contrast and sharpness.

Standard:
Recommended for normal viewing conditions in your home. Select this if you encounter roughness when viewing the picture with "Dynamic."

Cinema:
Select this for a soft, film-like picture.

User1, User2, User3:
Adjust the quality of the picture to suit your taste. The settings will be stored in a pre-selected memory area of the projector. Press one of the User1, 2, or 3 buttons, then adjust the picture using the menus.
To view the picture with the adjusted picture quality, press the respective button.

To store the settings

1 Select "User1," "User2," or "User3."

2 Select and adjust the "ADJUST PICTURE" items. You can also select "Dynamic," "Standard," or "Cinema" mode and adjust the "ADJUST PICTURE" items for these modes as well. To reset the items to the factory setting, press the RESET button on the remote.

ADJUST PICTURE

The ADJUST PICTURE menu is used for adjusting the picture.
Items that cannot be adjusted for a particular input signal do not appear in the menu.

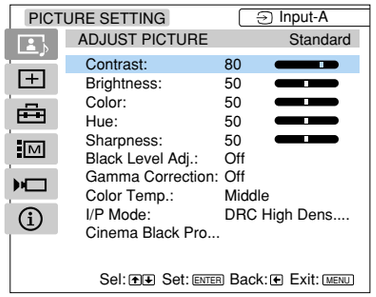

Contrast

Adjusts the picture contrast.
The higher the setting, the greater the contrast.
The lower the setting, the lower the contrast.

Brightness

Adjusts the picture brightness.
The higher the setting, the brighter the picture.
The lower the setting, the darker the picture.

Color

Adjusts color intensity.
The higher the setting, the greater the intensity.
The lower the setting, the lower the intensity.

Hue

Adjusts color tones.
The higher the setting, the more greenish the picture becomes.
The lower the setting, the more purplish the picture becomes.

Sharpness

Adjusts the picture sharpness.
The higher the setting, the sharper the picture.
The lower the setting, the softer the picture.

Black Level Adj.

Select "Off," "Low," or "High," depending on the source signal, to produce a bolder, dynamic picture.

Note

- You cannot adjust "Black Level Adj." when input preset memory No.5, 45, or 49 (page 43) is input and "Source Direct" is set to "On."

Gamma Correction

Select "Off (no gamma correction)," "Gamma1,""Gamma2," or "Gamma3."
You can set and store your favorite tone to "Gamma1," "Gamma2," and "Gamma3" using "ImageDirector" (see page 52).

Note

- You cannot adjust "Gamma Correction" when input preset memory No.5, 45, or 49 (page 43) is input and "Source Direct" is set to "On."

continued ···▸

Color Temp

Adjusts the color temperature.

High:
Select to make the whites bluish.

Middle:
Select to set the color temperature between "High" and "Low."

Low:
Select to make the whites reddish.

Custom1, Custom2, Custom3:
Adjust the color temperature to suit your taste. The settings will be stored in a pre-selected memory area of the projector.

I/P Mode

Smooths out video images that look rougher as the size increases.

DRC Progressive:
Select to convert an interlace format video signal to a progressive format.

DDE Progressive:
Select to convert an interlace format HD (high definition) signal to a progressive format.

DDE Film:
Select to reproduce 2-3 Pull-Down film sources with smooth picture movement. When the video signal with a format other than the 2-3 Pull-Down format is input, "DDE Progressive" is selected automatically.

DRC High Dens.:
Select to double the number of video signal scanning lines and the number of horizontal pixels to quadruple picture image density. When you press the ➡ or ENTER button while "DRC High Dens." is selected, the DRC Palette display appears.

DRC Palette:
Adjust the "Reality" and "Clarity" of a picture to suit your taste. These items are adjustable only when "DRC High Dens." or "DRC Progressive" is selected.

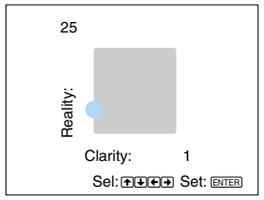

To increase the value for "Clarity," press the ➡ button.
To decrease the value for "Clarity," press the ⬅ button.
To increase the value for "Reality," press the ⬆ button.
To decrease the value for "Reality," press the ⬇ button.

Cinema Black Pro

Emphasizes the black color.

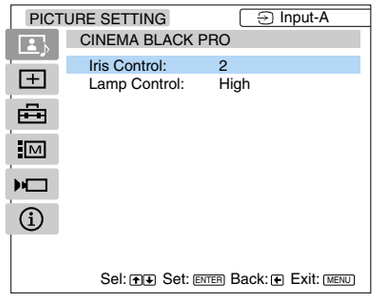

Iris Control:
Off: Normal contrast.
1: Select to set the contrast level between "2" and "Off."
2: Select to enhance the black by emphasizing the contrast.

Lamp Control:
High: Normal wattage.
Low: Select to enhance the black by reducing the lamp wattage.

Input signals and adjustable items

Item		Input signal			
		Video or S video	Component	Video GBR	Computer
Contrast		○	○	○	○
Brightness		○	○	○	○
Color		○ (except for black-and-white)	○	○	×
Hue		○ (NTSC 3.58/4.43 only, except for black-and-white)	○	○	×
Sharpness		○	○	○	×
Black Level Adj.*		○	○	○	×
Gamma Correction*		○	○	○	○
Color Temp.		○	○	○	○
I/P Mode**		○	○ (input signal preset memory No.1, 2, 3, 4, 5, 45, 49 only)	○ (input signal preset memory No.1, 2, 3, 4, 5, 45, 49 only)	×
Cinema Black Pro	Iris Control	○	○	○	○
	Lamp Control	○	○	○	○

○: Adjustable/can be set ×: Not adjustable/can not be set

* You cannot adjust "Black Level Adj." and "Gamma Correction" when input signal preset memory No. 5, 45, or 49 (page 43) is input and "Source Direct" is set to "On."
** You cannot select "DDE Progressive" when input signal preset memory No. 1, 2, 3, or 4 (page 43) is input. You cannot select "DRC High Dens." or "DRC Progressive" when input signal preset memory No. 5, 45, or 49 (page 43) is input.

INPUT SETTING menu

ADJUST SIGNAL

The INPUT SETTING menu is used to adjust the input signal.
Items that cannot be adjusted for a particular input signal do not appear in the menu.

Example: When a computer signal is input.

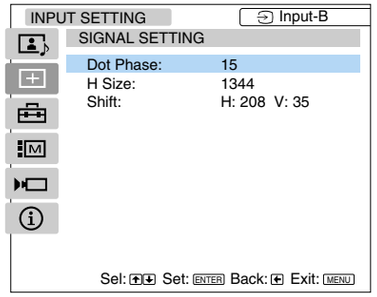

Dot Phase

Adjusts the dot phase of the panel and the computer signal input from the INPUT B connector.
Adjust the picture to the point where it looks clearest.

H Size

Adjusts the horizontal size of the picture input from the INPUT A/B connector.
The higher the setting, the larger the horizontal size of the picture. The lower the setting, the smaller the horizontal size of the picture. Adjust the setting according to the number of dots of the input signal. For details on a suitable value for the preset signals, see page 43.

Shift

Adjusts the position of the picture input from the INPUT A/B connectors.
Use the ← or → button for "H (the horizontal position of the picture)" and the ↑ or ↓ button for "V (the vertical position of the picture)."
As the setting for "H" increases, the picture moves to the right, and as the setting decreases, the picture moves to the left.
As the setting for "V" increases, the picture moves up, and as the setting decreases, the picture moves down.

AUTO WIDE SETTING

When set to "2," the most appropriate screen projection mode is selected automatically according to the signal being input and displays the picture to fill a 16:9 screen.

Example: When a video signal is input.

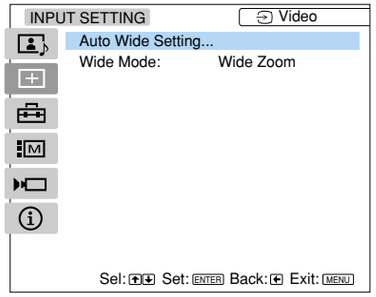

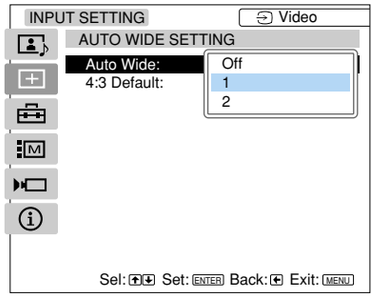

Auto Wide

Off:
Select to display any picture in the currently selected wide screen projection mode.

1:
Select to display a picture containing an aspect ratio signal* with the original aspect ratio.

2:
Select to display a picture with the most appropriate screen projection mode regardless of the aspect ratio signal.

4:3 Default

Select "Wide Zoom" or "Normal" to display a picture in either mode when a normal 4:3 aspect ratio picture is input and the "Auto Wide" is set to "2."

* An aspect ratio signal lets a TV, etc. reproduce a picture with its original ratio. This projector can handle images such as video camera pictures, DVD movies, etc. with an aspect ratio signal included in the data (e.g. ID-1, S2).

continued ···▸

Screen projection mode when “Auto Wide 1” or “Auto Wide 2” is set (depending on the type of picture)

Type of picture	Screen projection mode	
	Auto Wide 1	Auto Wide 2
Normal TV broadcast	The image is displayed according to the screen projection mode selected with the WIDE MODE button or with “Wide Mode” in the INPUT SETTING menu.	“Wide Zoom” or “Normal”*
TV broadcast with a signal containing an aspect ratio of 4:3 (“Normal”)	“Normal”	“Wide Zoom” or “Normal”*
Wide-format movie with a subtitle area on the picture	The image is displayed according to the screen projection mode selected with the WIDE MODE button or with “Wide Mode” in the INPUT SETTING menu.	“Zoom”
Wide-format movie with a subtitle area out of the picture	The image is displayed according to the screen projection mode selected with the WIDE MODE button or with “Wide Mode” in the INPUT SETTING menu.	“Subtitle”
Video camera picture, DVD movie, etc. with an ID-1 or S2 signal containing an aspect ratio of 16:9 (“Zoom” or “Full”)	“Zoom” or “Full”	“Zoom” or “Full”
Video camera picture, DVD movie, etc. with an ID-1 or S2 signal containing an aspect ratio of 4:3 (“Normal”)	“Normal”	“Wide Zoom” or “Normal”*

* This depends on the setting of “4:3 Default” in “AUTO WIDE SETTING.”

You can also select the desired screen projection mode manually. Each time you press the WIDE MODE button on the remote, the “Wide Mode” setting changes cyclically as follows: “Full,” “Normal,” “Wide Zoom,” “Zoom,” “Subtitle.”

If no aspect ratio signal is input when “Auto Wide” is set to “1,” black bands may appear on the perimeter of the screen or a part of the picture may not be displayed according to the screen projection mode you selected manually.

About the screen projection mode

- Soon after being changed using the WIDE MODE button, the picture may appear in a screen projection mode different from the one shown in the chart on page 38.
- When “Auto Wide” is set to “1” or “2,” it keep working even though you press the WIDE MODE button only once. If you press the WIDE MODE button more than once, you can select the desired projection mode.
  - If the signal contains an aspect ratio signal, the screen projection mode changes according to the aspect ratio signal in the picture received.
  - If the signal does not contain an aspect ratio signal, the screen projection mode does not change even though “Auto Wide” is set to “2.” However, the “Auto Wide” settings will be enabled again if you change the channel, the input signal, or turn the projector off and on.

If the screen projection mode changes spontaneously when “Auto Wide” is set to “1” or “2”

- The projector automatically selects the most appropriate screen projection mode according to the aspect ratio of the input signal.
- When commercials come on or a program changes, etc. while “2” is selected, the picture may be distorted for a few seconds. This is because the projector is selecting the most appropriate screen projection mode automatically according to the input signal.

Notes on wide mode

This projector provides you with various choices of screen projection mode. When changing the screen projection mode, consider the following:

- Selecting a screen projection mode may provide a different look from that of the original image.
- If the projector is used for profit or for public viewing, modifying the original picture by switching screen projection mode may constitute an infringement of the rights of authors or producers that are legally protected by copyright laws.
- When you watch a normal 4:3 picture enlarged to fill a 16:9 screen using “Wide Zoom,” the perimeter of the picture may not appear or be distorted. Selecting “Normal” provides the same look as that of the original image.
- Depending on the size and type of the original image, the upper and lower edges of the picture may be cut, or the picture may lack subtitles. In this case, adjust “V Position” or “Title Area” (see page 41). However, you cannot adjust these items when the screen projection mode is set to “Full,” “Normal,” or “Wide Zoom.”
- Even though you change the screen projection mode, black bands appear on the upper or lower edges of the screen when a wide-format movie with a Vistavision (1.85:1) or Cinemascope (2.35:1) aspect ratio signal is received.

continued ···▸

Wide Mode

Enjoy various screen pojection modes in either a 4:3 or 16:9 aspect ratio as follows: 16:9 “Full,” 4:3 “Normal,” “Wide Zoom,” “Zoom,” “Subtitle.”

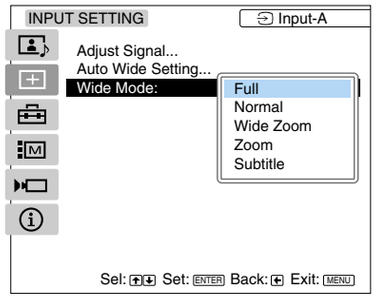

Note

- You cannot change the screen projection mode while the projector is projecting images from an HD (High Definition) signal source or a computer.

Full:

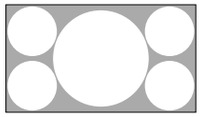

A 16:9 image squeezed horizontally is displayed in the correct aspect. A 4:3 image is enlarged horizontally.

Normal:

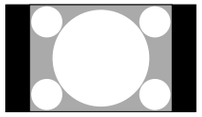

A picture with a normal 4:3 ratio is displayed.

Wide Zoom:

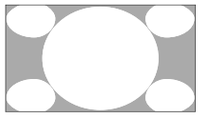

A picture with a normal 4:3 ratio is enlarged and the upper and lower portions of the picture are compressed. This is ideal for general programs, such as news or variety shows.

Zoom:

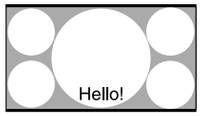

A picture with a 4:3 normal ratio is enlarged vertically and horizontally (with the same ratio) to fit the screen size. This mode is ideal for capturing the full-screen drama of wide-format movies.

Subtitle:

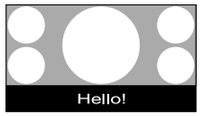

The subtitle area is compressed. This mode leaves the subtitles on the lower part of the screen.

Adjustable items (depending on the screen projection mode)

Item	V Position	Title Area
Full	×	×
Normal	×	×
Wide Zoom	×	×
Zoom	○	×
Subtitle	○	○

○: Adjustable ×: Not adjustable

V Position

Adjusts the vertical position of the picture. As the setting increases, the picture moves up, and as the setting decreases, the picture moves down. To resume the normal position, press the RESET button.

Title Area

Adjusts the subtitle area.
The adjustable range is from 0 to 7. As the setting increases, the subtitle area becomes wider, and as the setting decreases, the subtitle area becomes narrower. To return to the normal area setting, press the RESET button.

Note

- Although the adjustable range displayed is 0 to 7, the actual range may be limited depending on the “V Position” setting.

continued ···▸

Input signals and adjustable items

Item	Input signal			
	Video or S video (Y/C)	Component	Video GBR	Computer
Dot Phase	×	×	×	○
H Size	×	○ (except for input signal preset memory No.1, 2, 3, 4, 5, 45, 49)	○ (except for input signal preset memory No.1, 2, 3, 4, 5, 45, 49)	○
Shift	×	○ (except for input signal preset memory No.1, 2, 3, 4)	○ (except for input signal preset memory No.1, 2, 3, 4)	○
Wide Mode	○	○ (DTV : except for input signal preset memory No.5, 45, 49, 50)	○ (DTV : except for input signal preset memory No.5, 45, 49, 50)	×

○: Adjustable/can be set ×: Not adjustable/can not be set

Note

- When a DVI or HDMI signal is input, you cannot adjust “Dot Phase,” “V Position,” or “Shift.”

About the input signal preset memory

This projector has 43 kinds of preset data for input signals (input signal preset memory). When a signal is input, this projector automatically detects the signal type. When the signal is registered in the preset memory, a suitable picture is displayed on the screen according to the signal type. The type of input signal is displayed in the INPUT SETTING menu. You can adjust the preset data using the INPUT SETTING menu.
This projector also has 20 user memory locations for INPUT B. Using these locations, you can register a new signal type that is not currently preset. When a signal is input for the first time, the adjusted setting made using INPUT B in the INPUT SETTING menu is stored. When more than 20 user memory items are registered for INPUT B, the newest memory item is automatically stored over the oldest one.

Preset signals

Memory No.	Preset signal		fH (kHz)	fV (Hz)	Sync	H Size
1	Video 60 Hz		15.734	59.940	H-neg V-neg	—
2	Video 50 Hz		15.625	50.000	H-neg V-neg	—
3	480/60i (DTV)		15.734	59.940	SonG/Y or composite sync	—
4	575/50i (DTV)		15.625	50.000	SonG/Y or composite sync/composite video	—
5	1080/60i (DTV), 1080/60i		33.750	60.000	SonG/Y or composite sync	—
6	640 × 350	VGA mode 1	31.469	70.086	H-pos V-neg	800
7		VGA VESA 85 Hz	37.861	85.080	H-pos V-neg	832
8	640 × 400	PC-9801 Normal	24.823	56.416	H-neg V-neg	848
9		VGA mode 2	31.469	70.086	H-neg V-pos	800
10		VGA VESA 85 Hz	37.861	85.080	H-neg V-pos	832
11	640 × 480	VGA mode 3	31.469	59.940	H-neg V-neg	800
12		Macintosh 13"	35.000	66.667	SonG	864
13		VGA VESA 72 Hz	37.861	72.809	H-neg V-neg	832
14		VGA VESA 75 Hz	37.500	75.000	H-neg V-neg	840
15		VGA VESA 85 Hz	43.269	85.008	H-neg V-neg	832
16	800 × 600	SVGA VESA 56 Hz	35.156	56.250	H-pos V-pos	1024
17		SVGA VESA 60 Hz	37.879	60.317	H-pos V-pos	1056
18		SVGA VESA 72 Hz	48.077	72.188	H-pos V-pos	1040
19		SVGA VESA 75 Hz	46.875	75.000	H-pos V-pos	1056
20		SVGA VESA 85 Hz	53.674	85.061	H-pos V-pos	1048
21	832 × 624	Macintosh 16"	49.724	74.550	H-neg V-neg	1152

continued ···▸

Memory No.	Preset signal		fH (kHz)	fV (Hz)	Sync	H Size
22	1024 × 768	XGA VESA 43 Hz	35.524	43.479	H-pos V-pos	1264
23		XGA VESA 60 Hz	48.363	60.004	H-neg V-neg	1344
24		XGA VESA 70 Hz	56.476	69.955	H-neg V-neg	1328
25		XGA VESA 75 Hz	60.023	75.029	H-pos V-pos	1312
26		XGA VESA 85 Hz	68.677	84.997	H-pos V-pos	1376
27	1152 × 864	SXGA VESA 70 Hz	63.995	70.019	H-pos V-pos	1472
28		SXGA VESA 75 Hz	67.500	75.000	H-pos V-pos	1600
30	1152 × 900	Sunmicro LO	61.795	65.960	H-neg V-neg	1504
31		Sunmicro HI	71.713	76.047	C-neg	1472
32	1280 × 960	SXGA VESA 60 Hz	60.000	60.000	H-pos V-pos	1800
34	1280 × 1024	SXGA VESA 43 Hz	46.433	43.436	H-pos V-pos	1696
35		SGI-5	53.316	50.062	SonG	1680
36		SXGA VESA 60 Hz	63.974	60.013	H-pos V-pos	1696
43	480/60p	480/60p (Progressive component)	31.470	60.000	SonG/Y or composite sync	1716
44	575/50p	575/50p (Progressive component)	31.250	50.000		1728
45	1080/50i	1080/50i (DTV)	28.130	50.000		—
47	720/60p	720/60p(DTV)	45.000	60.000		1650
48	720/50p	720/50p(DTV)	37.500	50.000		1980
49	1080/24PsF	DTV 1080/48i	27.000	48.000		—
50	540/60p	540/60p	33.750	60.000	H-pos V-pos	2200
52	1400 × 1050	SXGA+ 60 Hz	63.981	60.020	H-neg V-neg	1688
73	1280 × 720	1280 × 720 60 Hz	47.772	59.855	H-neg V-pos	1664

- When you input a signal that is not preset, the picture may not be displayed correctly.
- No. 22 and 34 are interlace signals.
- No. 11 to 21, 23 to 28, 32, and 36 are available for input signals via the DVI-D connector. Set “DVI Signal Sel.” to “Computer.”
  Also, No. 52 and 73 are available when DDC (Display Data Channel) is set to off on the computer. DDC allows the computer to obtain information about features from the monitor. It also allows output of the most appropriate refresh value automatically, based on the resolution of the monitor. However, the screen resolution of the projector may not be supported or it is possible DDC cannot be turned off, depending on the computer. For the details, refer to the operating instructions supplied with your computer.
- No. 3, 4, 5, 43, 44, 45, 47, and 48 are available for input signals via the DVI-D connector. Set “DVI Signal Sel.” to “Video GBR.”
- No. 3, 4, 5, 11, 43, 44, 45, 47, and 48 are available for input signals via the HDMI connector.

After the data is recalled from the preset memory for the following signals, adjust “H Size.” Then, make finer adjustments using “Shift.”

Signal	Memory No.	H Size
Super Mac-2	23	1312
SGI-1	23	1320
Macintosh 19"	25	1328
Macintosh 21"	28	1456
Sony News	36	1708
PC-9821 1280 × 1024	36	1600
WS Sunmicro	37	1664

Note

- Depending on the aspect ratio of the input signal, part of the screen may be displayed in black.

SET SETTING menu

The SET SETTING menu is used for changing the settings of the projector.

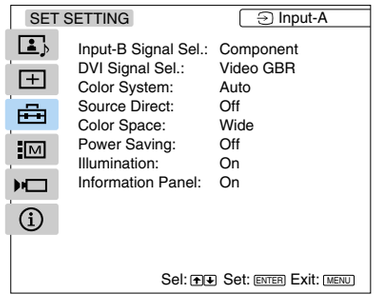

INPUT-B Signal Sel.

Select “Computer,”“Component,” or “Video GBR,” according to the signal input via the INPUT B connectors.

DVI Signal Sel.

Select “Computer” or “Video GBR,” according to the signal input via the DVI-D connector.

Notes

- The INPUT A connectors are only for component signal input.
- If the setting of “INPUT-B Signal Sel.” is not correct, the color of the picture may be distorted, or “Please check Input-B Signal Sel.” appears on the screen and the picture is not displayed.
- If the setting of “DVI Signal Sel.” is not correct, the color of the picture may be distorted, or “Please check DVI Signal Sel.” appears on the screen and the picture is not displayed.
- Set a progressive component signals (e.g. DVD) to “Component” and 15k RGB signals (e.g. game machines) to “Video GBR.”

Signals that can be input according to the INPUT-B setting

Signal	Setting of INPUT-B		
	Computer	Component	Video GBR
15k RGB	×	×	○
Component	×	○	×
Progressive component signal, e.g. DVD	×	○	×
DTV	×	○	○
PC	○	×	×

○: can be input ×: cannot be input

Color System

Selects the color system of the input signal.

Auto:
One of the following signals is selected automatically:
“NTSC,” “PAL,” “SECAM,” “$NTSC_{4.43}$,” “PAL-M,” “PAL-N.”

$NTSC_{3.58}$, PAL, SECAM, $NTSC_{4.43}$, PAL-M, PAL-N:
Set the color system to a selected input signal.

Normally, set to “Auto.” If the picture is distorted or colorless, select the color system appropriate for the input signal.

Source Direct

When set to “On,” the projector reproduces a faithful picture from the following HD (High Definition) input signals: input signal preset memory No. 5, 45, 49.

Color Space

Selects the range of color reproduction from “Normal” or “Wide.”

Power Saving

When set to “On,” the projector goes into power saving mode if no signal is input for 10 minutes. This mode is cancelled when a signal is input or any button is pressed.

Illumination

When set to “On,” the projector turns on the illumination on the top panel of the projector. It turns off when this item is set to “Off.”

Information Panel

When set to “On,” information appears on the information panel display. This information disappears when this item is set to “Off.”

MENU SETTING menu

The MENU SETTING menu is used for changing the on-screen menu settings of the projector.

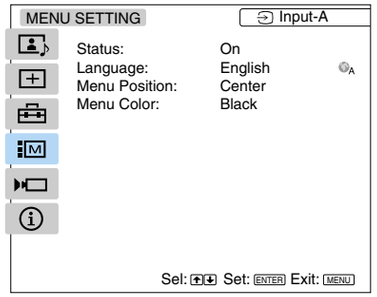

Status (on-screen display)

When set to “Off,” the on-screen display is turned off except for the menus, messages displayed when the power is turned off, and warning messages.

Language

Selects the language used in the menu and in on-screen displays.
Available languages are: “English,” “Dutch,” “French,” “Italian,” “German,” “Spanish,” “Portuguese,” “Russian,” “Swedish,” “Norwegian,” “Japanese,” “Chinese,” and “Korean.”

Menu Position

Selects the display position of the menus from “Top Left,” “Bottom Left,” “Center,” “Top Right,” or “Bottom Right.”

Menu Color

Selects the color of the menu display from “Black” or “White.”

INSTALL SETTING menu

The INSTALL SETTING menu is used for changing the installation settings of the projector.

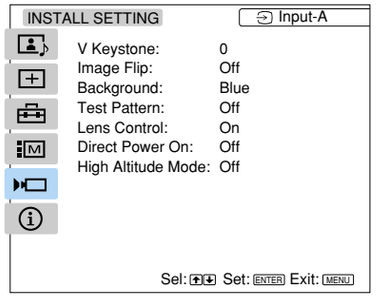

V Keystone

Corrects the vertical trapezoidal distortion of the picture. Set a lower value (the – direction) when the bottom of the trapezoid is longer than the top. Set a higher value (the + direction) when the top of the trapezoid is longer than the bottom.

Note

- You cannot adjust “V Keystone” when input signal preset memory No. 5, 45, or 49 is input and “Source Direct” is set to “On.”

Image Flip

Reverses the picture horizontally or vertically.

Off:
The picture is not reversed.

HV:
Select to reverse the picture horizontally and vertically.

H:
Select to reverse the picture horizontally.

V:
Select to reverse the picture vertically.

continued ···▸

Background

Selects the background color of the screen when no signal is input. You can select “Black” or “Blue.”

Test Pattern

When set to “On,” a test pattern appears on the screen to be used when adjusting the lens with “Focus,” “Zoom” and “Shift,” or correcting the screen proportions with “V Keystone.” A test pattern does not appear when this item is set to “Off.”

Lens Control

When set to “On,” you can adjust the projection lens using “Focus,” “Zoom” and “Shift.”
After you make this adjustment, it is recommended that you set this item to “Off” to avoid any operation of the lens by mistake.

Direct Power On

Sets the power status of the projector when AC line voltage is supplied.

On:
Select to turn the projector on when AC line voltage is supplied.

Off:
Select to turn the projector to standby mode when AC line voltage is supplied.

High Altitude Mode

Off:
Select this when using the projector at normal altitudes.

On:
Select this when using the projector at an altitude of 1,500 m or higher.

INFORMATION menu

The INFORMATION menu is used for checking information such as the frequency of the input signal. You can display the settings, but you cannot adjust them.

Example:

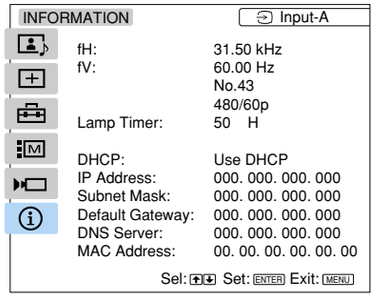

fH

Displays the horizontal frequency of the input signal.

fV

Displays the vertical frequency of the input signal.
Also, the screen resolution and input signal preset memory No. is displayed.

Lamp Timer

Displays the total number of hours the projector lamp has been used.

DHCP

Displays whether the IP address is obtained automatically or not.

IP Address

Displays the IP address of the projector.

Subnet Mask

Displays the subnet mask.

Default Gateway

Displays the default gateway.

DNS Server

Displays the DNS server address.

MAC address

Displays the MAC address of the projector.

ImageDirector

Features

Using ImageDirector, you can adjust the projector's gamma value to your satisfaction from a computer connected to the projector. ImageDirector Ver.2 enables you to adjust the luminance curve of an input signal differently from the previous version of ImageDirector.
The projector can share adjustments with other projectors because ImageDirector Ver.2.0 adjusts the curve without changing the preset gamma value on each projector. You can then save this adjusted value to your computer.
Refer to the ReadMe.txt and the online help on the supplied CD-ROM for ImageDirector operating instructions.

Operating system environment for ImageDirector

The ImageDirector application can be used in any of the following operating system environments.

Operating systems:
Microsoft Windows 98, Windows 98SE, Windows 2000 Professional, Windows Me, Windows XP Home Edition/ Professional

CPU:
MMX Pentium 166 MHz or more (Pentium II 300 MHz or more recommended)

Hard disk:
10 MB or more of free space

Memory:
32 MB or more

Other hardware requirements:
CD-ROM drive
If connecting to the projector using a USB jack: USB port (this must be provided as standard), USB cable
If connecting to the projector using a COM port: RS-232C serial port, D-sub 9-pin cross (reverse) cable

Screen resolution:
SVGA (800 × 600 dots) or above, 65536 colors or more

Notes

- ImageDirector will not work on some computers even though they satisfy the above requirements.
- ImageDirector will not work on Macintosh systems.
- Microsoft and Windows are registered trademarks of Microsoft Corporation in the United States and other countries.
- MMX and Pentium are trademarks or registered trademarks of Intel Corporation or its subsidiaries in the United States and other countries.

Installing ImageDirector

To use ImageDirector, you need to install it on your computer. You need to do this before you use ImageDirector for the first time, or whenever you replace the operating system on your computer.
Install ImageDirector as follows.

Notes

- If you are using Microsoft Windows 2000 Professional, or Windows XP Home Edition/Professional on your computer, log on using the "administrator" account.
- If you are using Microsoft Windows 2000 Professional, install ImageDirector on your computer after making sure Microsoft Windows 2000 Service Pack 3 or above is already installed.
- If you are using Microsoft Windows XP Home Edition/Professional, install ImageDirector on your computer after making sure Microsoft Windows XP Service Pack 1 or above is already installed.

1. Insert the ImageDirector CD-ROM in the computer's CD-ROM drive.
   The startup window appears.
2. Click [Install] on the startup window.
   Installation starts automatically and the setup dialog box opens.
3. Proceed with installation following the messages displayed in the setup dialog box.

Notes

- During installation, an electronic "End-user License Agreement" is displayed. It is important that you read the agreement first. Only after you agree with the agreement you can install ImageDirector.
- If you already have a version of ImageDirector installed, quit the existing ImageDirector and uninstall it before you update your ImageDirector. Install the latest ImageDirector only after you have uninstalled the previous ImageDirector.

continued ····▶

Uninstalling ImageDirector

Uninstall ImageDirector as follows.

Note

- To uninstall the ImageDirector application installed on your computer, first close ImageDirector.

For Windows 98/98SE/ 2000 Professional/Me

1. Click [Start] on the taskbar.
   The [Start] menu appears.
2. Point to [Settings] on the [Start] menu.
   The [Settings] menu appears.
3. Click [Control Panel] on the [Settings] menu.
   The “Control Panel” window appears.
4. Double-click [Add/Remove Programs].
   The “Add/Remove Programs” dialog box appears.
5. Select “ImageDirector2” from the list, then click [Add/Remove] (for Windows 2000 Professional: [Change/Remove]).
   Uninstallation of ImageDirector starts.
   Follow the instructions on the screen.

For Windows XP Home Edition/ Professional

1. Click [Start] on the taskbar.
   The [Start] menu appears.
2. Click [Control Panel] on the [Start] menu.
   The “Control Panel” window appears.
3. Double-click [Add/Remove Programs].
   The “Add/Remove Programs” dialog box appears.
4. Select “ImageDirector2” from the list, then click [Change/Remove].
   Uninstallation of ImageDirector starts.
   Follow the instructions on the screen.

Notes for installation

About ventilation holes

The projector has ventilation holes (intake and exhaust) as shown below.

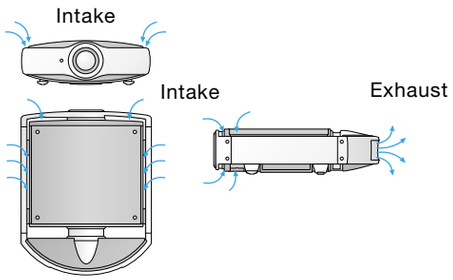

Unsuitable installation

Do not install the projector in the following situations. These installations may cause malfunction or damage to the projector.

Poorly ventilated areas

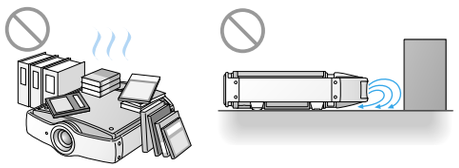

- Allow adequate air circulation to prevent internal heat buildup. Do not place the projector on surfaces or near materials that may block the ventilation holes. Internal heat buildup due to blockage of the ventilation holes may cause a malfunction.

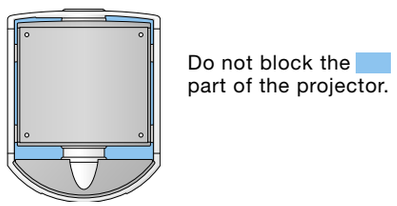

- Leave a space of more than 20 cm (7 7/8 inches) from the rear panel and 30 cm (11 7/8 inches) from other surfaces.

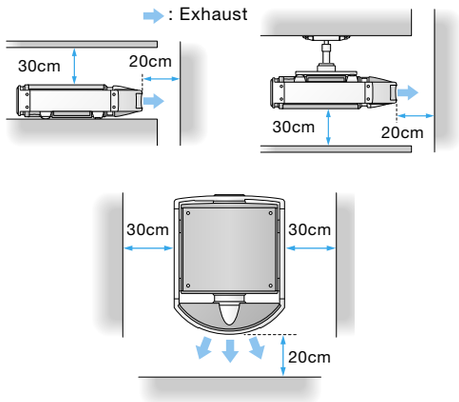

- Be careful that the ventilation holes do not inhale tiny objects such as pieces of paper.
- If you put something behind the projector, where ventilation holes are located, the exhaust may be circulated into the projector through the ventilation holes at the bottom, causing the internal temperature to rise, which may cause a malfunction. Install the projector so that the exhaust is not blocked.
- Do not install the projector in a confined space.

Hot and humid areas

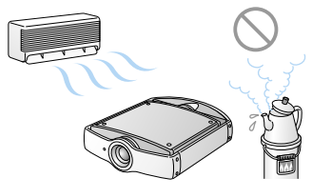

Avoid installing the projector in a location where the temperature or humidity is very high, or the temperature is very low.
If you install the projector on the ceiling, keep the temperature near the intake ventilation holes under 35 °C (95 °F).

Very dusty areas

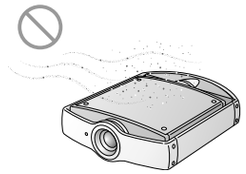

Avoid installing the projector in a location where there is a lot of dust; otherwise, the air filter will clog. The dust blocking the air through the filter may cause the internal heat level of the projector to rise. Periodically replace the filter with a new one.

Use at high altitudes

When using the projector at an altitude of 1,500 m or higher, turn on “High Altitude Mode” in the MENU SETTING menu. Failing to set this mode when using the projector at high altitudes could have adverse effects, such as reducing the reliability of certain components.

Improper use

Do not do any of the following.

Standing the projector on its side

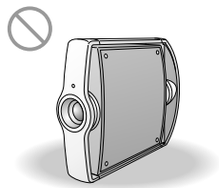

Avoid using the projector standing on its side. This may cause a malfunction.

Tilting front/rear and right/left

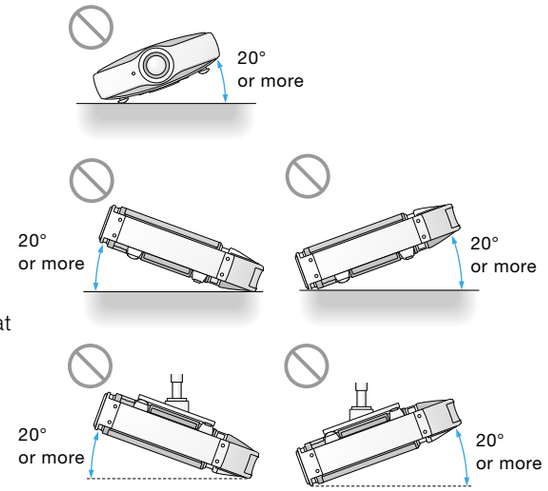

Avoid using the projector tilted at an angle of more than 20 degrees. Do not install the projector anywhere other than on a level surface or on the ceiling. Improper installation of the projector may cause a malfunction.

Blocking the ventilation holes

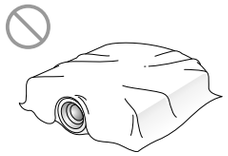

Avoid using something that covers over the ventilation holes; otherwise, internal heat may rise and cause a malfunction.

Installing the projector

Floor installation

For set up of your QUALIA 004, please consult with an authorized Sony custom installer.
You can calculate the throwing distance between the screen and the lens (TD) using the chart or formula on page 63.

For the VPLL-ZP310 short focal lens/ the VPLL-ZP400 middle focal lens

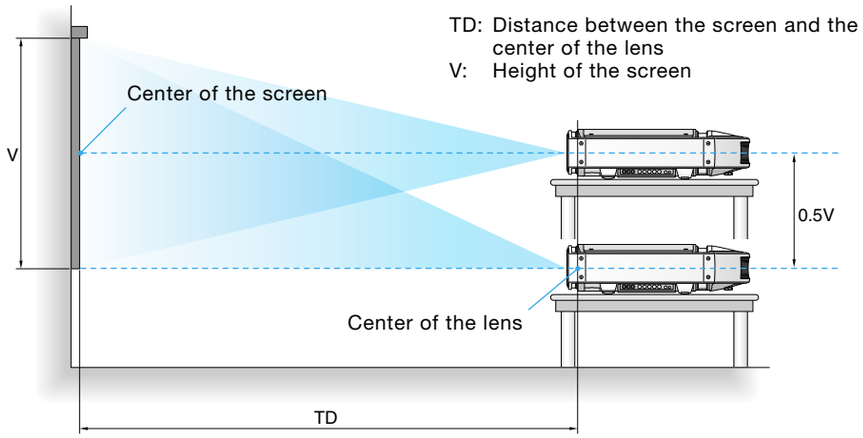

For the VPLL-ZP550 long focal lens

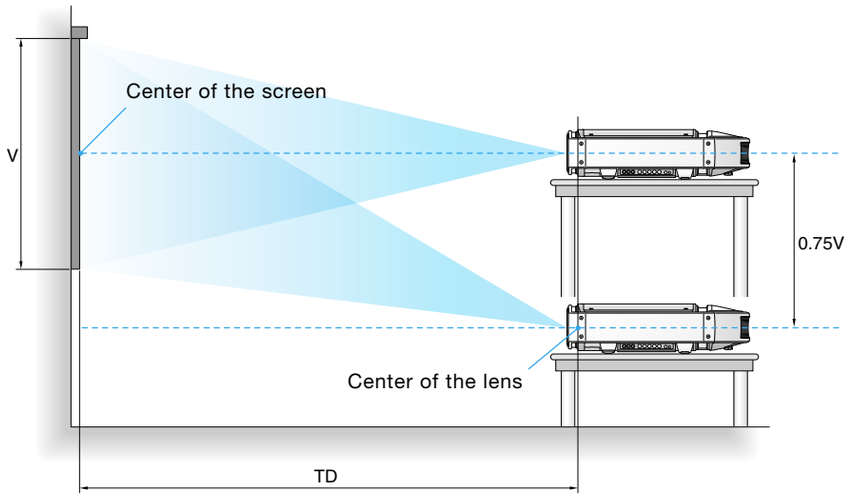

Installation measurement

When you install the projector on a desk, etc., see the following chart for the appropriate installation measurements.

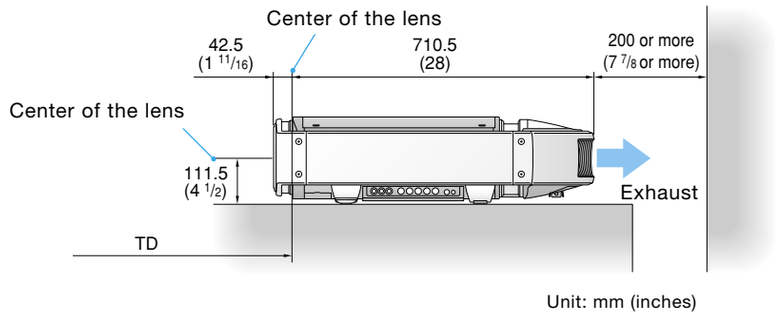

To correct trapezoidal distortion

When the projected image is a trapezoid, change the projector's position/height by moving the adjusters.
For details on how to use the adjusters, see page 19.
If the image is still a trapezoid, correct it using “V Keystone” in the INSTALL SETTING menu. For details on “V Keystone,” see page 49.

When the base edge is longer than the upper edge as shown in the figure below:

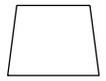

Set the value to a negative number.

When the upper edge is longer than the base edge as shown in the figure below:

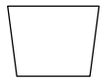

Set the value to a positive number.

For details on the kind of aspect ratio signals that can be changed, see the chart on page 42.

continued ···▸

Ceiling installation

When installing the projector on the ceiling, use the PSS-100 projector suspension support.
For set up of your QUALIA 004, please consult with an authorized Sony custom installer.

You can calculate the throwing distance between the screen and the lens (TD) using the chart or formula on page 63.

For the VPLL-ZP310 short focal lens/ the VPLL-ZP400 middle focal lens

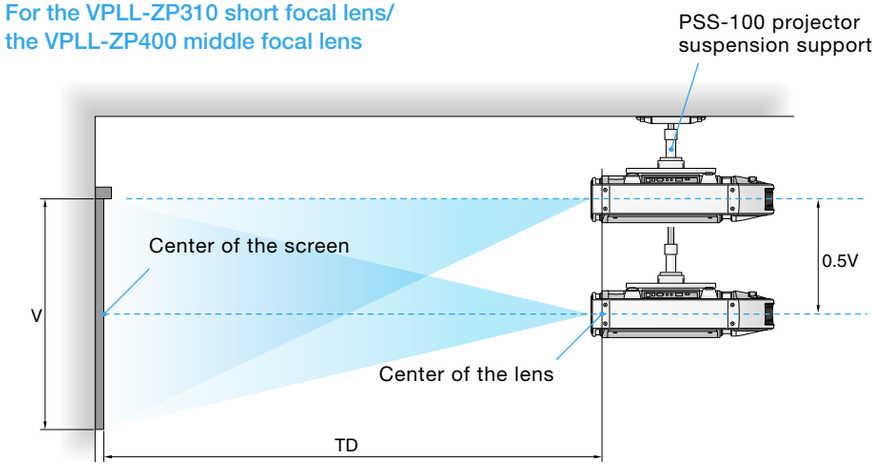

For the VPLL-ZP550 long focal lens

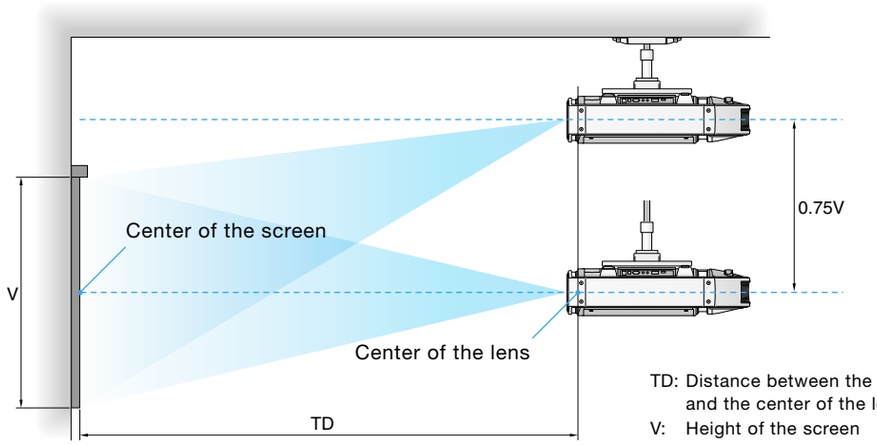

TD: Distance between the screen and the center of the lens
V: Height of the screen

Installation measurement

When you install the projector on the ceiling, see the following chart for the appropriate installation measurements.

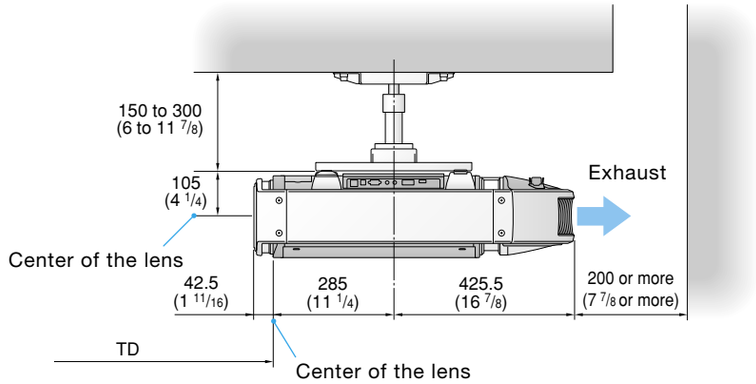

Unit: mm (inches)

Attaching the supplied air filter cover

When you install the projector on the ceiling, attach the supplied air filter cover to prevent the air filter from becoming clogged with dust.

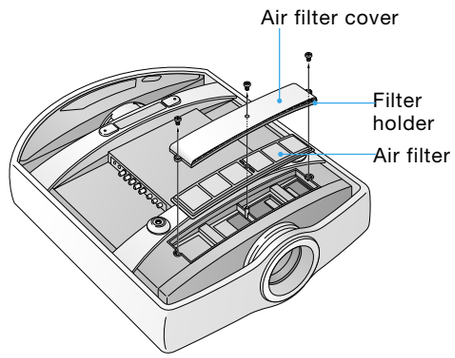

Attaching the supplied plug holder

To avoid unplugging the AC power cord accidentally, attach the supplied plug holder.

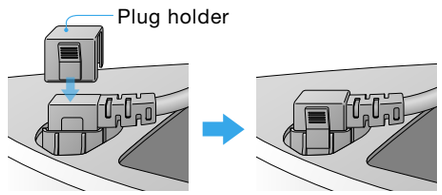

Notes

- Make sure that the AC power cord is connected properly.
- Attach the plug holder to avoid unplugging the AC power cord accidentally. Also, the plug holder prevents the AC power cord from becoming clogged with dust.
- For safety, use the AC power cord supplied with the unit.

continued ···▸

Attaching the PSS-100 projector suspension support

For set up of your QUALIA 004, please consult with an authorized Sony custom installer.

Top view

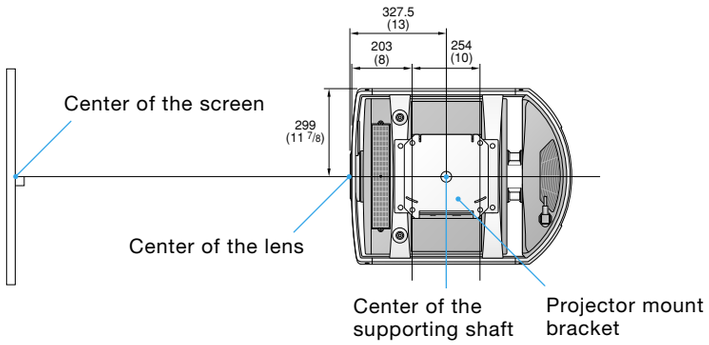

Front view

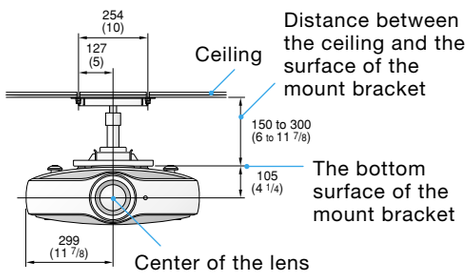

Side view

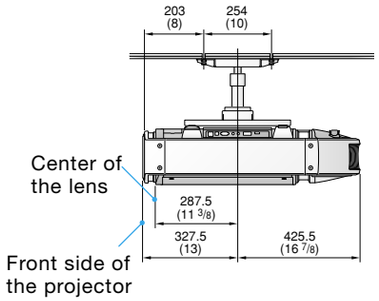

Unit: mm (inches)

Acceptable throwing distance for the screen size and lens type

Screen size (inches)	VPLL-ZP310 short focal lens			VPLL-ZP400 middle focal lens			VPLL-ZP550 long focal lens		
	Shift range (0.5V)	Wide size TD (W1)	Telephoto size TD (W2)	Shift range (0.5V)	Wide size TD (M1)	Telephoto size TD (M2)	Shift range (0.75V)	Wide size TD (T1)	Telephoto size TD (T2)
40	249 (9 7/8)	1230 (48 5/8)	1620 (63 3/4)	249 (9 7/8)	1610 (63 1/4)	2250 (88 1/2)	374 (14 3/4)	2230 (87 7/8)	3060 (120 1/2)
60	374 (14 3/4)	1880 (73 7/8)	2450 (96 5/8)	374 (14 3/4)	2440 (96 1/8)	3400 (134)	560 (22 1/8)	3390 (133 3/8)	4620 (182)
80	498 (19 5/8)	2520 (99 1/4)	3290 (129 1/2)	498 (19 5/8)	3270 (129)	4560 (179 1/2)	747 (29 1/2)	4540 (178 3/4)	6190 (243 5/8)
100	623 (24 5/8)	3160 (124 5/8)	4120 (162 3/8)	623 (24 5/8)	4110 (161 7/8)	5710 (225)	934 (36 7/8)	5690 (224 1/4)	7750 (305 1/4)
150	934 (36 7/8)	4770 (187 7/8)	6210 (244 1/2)	934 (36 7/8)	6190 (244)	8600 (338 3/4)	1401 (55 1/4)	8580 (337 3/4)	11660 (459 3/8)
200	1245 (49 1/8)	6380 (251 1/8)	8300 (326 3/4)	1245 (49 1/8)	8280 (326 1/8)	11490 (452 1/2)	1868 (73 5/8)	11460 (451 1/4)	15580 (613 3/8)
250	1557 (61 3/8)	7990 (314 1/2)	10380 (408 7/8)	1557 (61 3/8)	10370 (408 1/4)	14380 (566 1/4)	2335 (92)	14340 (564 7/8)	19490 (767 1/2)
300	1868 (73 5/8)	9590 (377 3/4)	12470 (491)	1868 (73 5/8)	12450 (490 3/8)	17270 (680)	2802 (110 3/8)	17230 (678 3/8)	23400 (921 1/2)

Unit: mm (inches)

If the chart above does not show your screen size

You can calculate the throwing distance as follows:
Throwing distance (TD) = Screen size × A (see the following chart) + B (see the following chart)

	VPLL-ZP310 short focal lens		VPLL-ZP400 middle focal lens		VPLL-ZP550 long focal lens	
	Wide size (W1)	Telephoto size (W2)	Wide size (M1)	Telephoto size (M2)	Wide size (T1)	Telephoto size (T2)
A	32.15272 (1 5/16)	41.73010 (1 11/16)	41.71488 (1 11/16)	57.77730 (2 3/8)	57.67571 (2 3/8)	78.25002 (3 1/8)
B	-53.15088 (-2 1/8)	-50.28342 (-2)	-63.16327 (-2 1/2)	-63.71005 (-2 5/8)	-75.26089 (-3)	-72.78449 (-2 7/8)

Removing/attaching the lens

Removing/attaching the lens may cause fire or personal injury. For set up of your QUALIA 004, please consult with an authorized Sony custom installer.

Note on the AC power cord when installing the projector on the ceiling

- To prevent the AC power cord from loosening and touching the cabinet of the projector, put the AC power cord inside the ornamental cover of the PSS-100 projector suspension support through the hole provided.

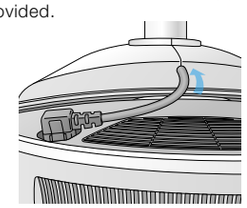

Connections

Connector panel (Left side)

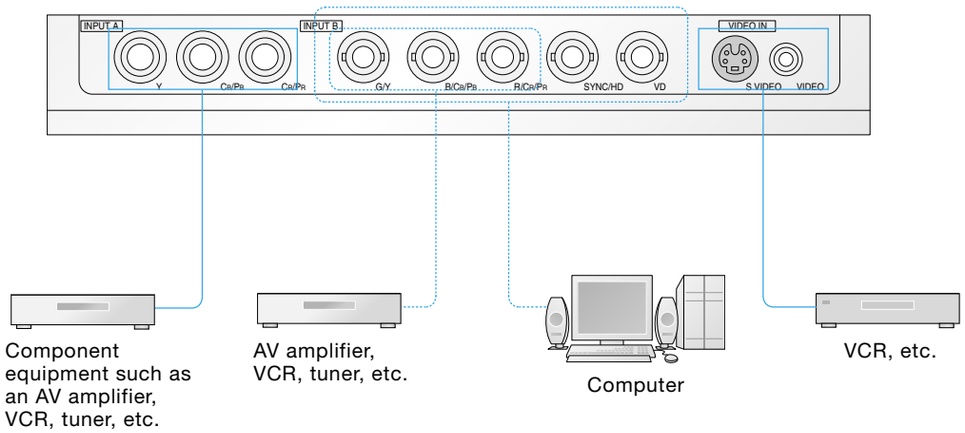

Notes on connections

When making connections, be sure to do the following:

- Turn off all equipment before making any connections.
- Use the proper cables for each connection.
- Insert the cable plugs properly; plugs that are not fully inserted often generate noise. When pulling out a cable, be sure to pull it out by the plug, not by the cable itself.

Connecting a VCR

- The INPUT A connectors are only for component input signals.
- To connect 15k RGB/component/progressive component equipment to the INPUT B connectors, select “Component” or “Video GBR” in “INPUT-B Signal Sel.” in the SET SETTING menu according to the input signal.For details on making the correct settings, see “INPUT-B Signal Sel.” in the SET SETTING menu on page 46.
- You can connect HD (High Definition) signal equipment.

Connecting a computer

- If you set your computer to output the signal to both your computer’s display and an external monitor, the picture on the external monitor may not appear properly. In such a case, set your computer to output the signal to only the external monitor.
  For details, refer to the operating instructions supplied with your computer.
- When you connect a computer to the INPUT B connectors and DDC is activated on the computer, the images may not be displayed correctly because the computer may not recognaize or may misidentify the projector. In this case, set DDC to off on the computer. For details, refer to the operating instructions supplied with your computer.

Connecting a Macintosh computer

When connecting an output connector that has a two-line pin configuration, use the appropriate adaptor for that type of connector (not supplied).

continued ····▶

Connector panel (Right side)

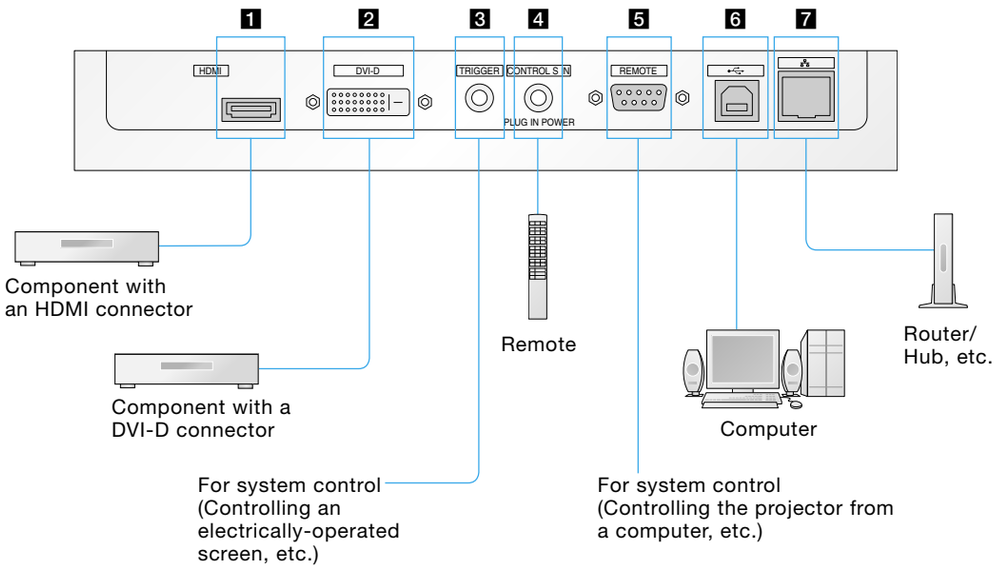

1 HDMI connector

Connect to the HDMI output of your component with an HDMI connector.

HDMI, the HDMI logo and High-Definition Multimedia Interface are trademarks or registered trademarks of HDMI Licensing LLC.

2 DVI-D connector

Connect to the DVI-D output of your component with a DVI-D connector.

3 TRIGGER jack (monaural minijack)

Connect to send the ON or OFF condition of the projector to external equipment.
However, you cannot use the connector as a power source. When the projector is turned off, no signal is output and when the projector is turned on, a 12 V signal is output.

4 CONTROL S IN jack (stereo minijack)

Connect to the control S out jacks of Sony equipment.
Connect to the CONTROL S OUT jack on the supplied remote when using it as a wired remote. Even when you use the remote as a wired remote, batteries must be inserted in the remote.

5 REMOTE connector

This is a connector for system control with which you can operate the projector from a computer, etc.

6 USB connector

When the projector is connected to a computer via this connector, you can adjust the gamma values of the projector from the computer using the ImageDirector software provided on the CD-ROM that came with the projector.
You cannot input a video signal from a computer, etc. via this connector.

7 NETWORK connector

Connecting the projector to the network enables control of the projector from a computer and the sending of mail messages that contain information on the present status of the projector. For details, see page 68.

Operating the projector from a computer

Accessing the projector from a computer

You can check the present status of the projector on a computer display and control the projector from a computer. Also, the projector enables the sending of mail that contains messages on the time for replacement of the projector lamp, error occurrences, etc., to mail addresses that have been specified.
Confirm that the projector and computer are connected to the router/hub with the LAN cables, then turn on the projector, computer and router/hub. For details on the connection, contact QUALIA Customer Service.

1 Start Internet Explorer 5.0 (or later versions) on your computer.

2 Type “http://xxx.xxx.xxx.xxx (the IP address of the projector)” as the “Address,” then press the ENTER key on your keyboard.
You can check the IP address of the projector using the INFORMATION menu (see page 51).

Enter the IP address here.

Checking the status of the projector

Click “Information.” You can check the information and present status of the projector on a computer display. You can check the information and status in the window, but you cannot change the settings.

INFORMATION
The present status of the projector is displayed.

MENU
The present settings of the projector are displayed.

Controlling the projector from a computer

Click “Control.” You can perform various adjustments and settings of the projector on a computer display.
The functions of the buttons in the windows are the same as those on the remote supplied with the projector.

The present setting status is indicated.
If you change the setting using the remote, click “Apply” at the upper right-hand corner of the window to update the status.

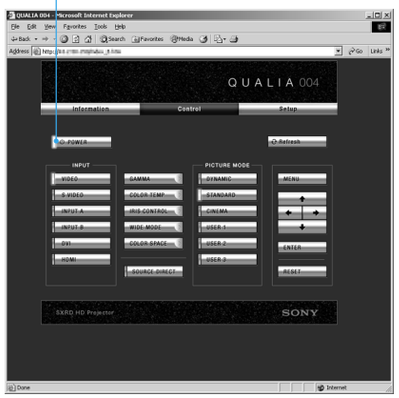

Setting up the projector

Click “Setup.” The Password Properties dialog box appears. The name of the “User” account is preset without a password to “root” at the factory. You can set the owner information, date and time, Mail Report, etc. Click “Apply” at the lower part of each window to update the projector to the data input in each window.

Owner and projector information

Click “Owner Information.”
This information is used for the Mail Report function.

Owner
Enter owner information.

Projector
Enter the location and lens type of the projector.

Memo
Enter a memo, if required.

continued ····▸

Setting the date and time

Click “Date and Time.”
This setting is required for the Regular Report function.

Time Zone
Select the region in which you are using the projector.

Date/Time
Set the date and time.

Time Server
Enter the address of the time server when the time is set by a time server.

Network settings

Click “Network.”

Internet Protocol (TCP/IP)
Normally, set “Obtain an IP address automatically (DHCP).” If you select “Specify an IP address,” set the necessary items.

Setting passwords for “Administrator” and “User”

Click “Password.” You can set passwords for each “Administrator” and “User.”
The name of the “Administrator” account is preset to “root” at the factory. It cannot be changed.

Settings for the Mail Report function

Click “Mail Report.”

You can do the following with the Mail Report function:

- Periodically report the installation status of the projector, the owner information, etc. You can specify the transmission days and times of e-mail messages (Regular Report).
- Immediately report if any error occurs with the projector (Error Report).
- Send warning e-mail messages when a preset time for use of the projector lamp has been reached (Lamp Reminder).
- Send warning e-mail messages when a preset time for maintenance of the projector has been reached (Maintenance Reminder).

Report Timing field

Regular Report
A report on the present status of the projector, installation status, etc. of the projector is periodically sent by e-mail.
Set the timing for sending the e-mail messages as follows:

At:
Specify the time when e-mail is to be sent. Select the hour from the drop-down list.

Every Week on Days:
Select this check box to send e-mail on the selected days every week.

Mon/Tue/Wed/Thu/Fri/Sat/Sun:
Specify the days of the week when e-mail is to be sent. You can check two or more days.

Every Month on Day:
Select this check box and select the day from the drop down list to send e-mail on a pre-defined day every month.The Regular Report contains the product information, owner information, usage information (time) for the projector, lamp mode, memos, etc.

Maintenance Report

Lamp Reminder:
Select this check box and enter the limit for the number of hours the projector lamp is to be used in the text box. This information will be used to send e-mail informing you that replacement is required for the projector lamp when the preset time has been reached. You can specify a time between 1 and 9999 hours.

Maintenance Reminder:
Select this check box and enter the hours of use before maintenance is required for the projector in the text box. You can specify a time between 1 and 99999 hours.
The elapsed time is displayed in the Elapsed Hours text box. Selecting the RESET check box and clicking “Apply” will reset the elapsed time to zero.

continued ····▶

Address field

Address
Enter the e-mail addresses where you want the e-mail messages to be sent in each text box. The projector allows you to send e-mail to 4 different addresses. You can enter up to 64 characters for each address.

Report Timing

Regular:
Select this check box to arrange the sending of the Regular Report.

Maintenance:
Select this check box to arrange the sending of an e-mail message that informs you of the number of hours the projector lamp has been used and the time when maintenance is required for the projector.

Error:
Select this check box to arrange the sending of an error report if any problem occurs with the projector.

Notes

- Even if days are specified in the Report Timing field, you still must select the Regular check box to receive the Regular Report. If the day preset in “Every Month on Day” does not exist in the month, you will receive the e-mail message on the last day of the month.
- You cannot specify the day of the week or day of the month if “Every Week on Days” or “Every Month on Day” is not selected.

Mail Form field

Select the e-mail message type from “Standard” or “Simple.” When the number of charactors in an e-mail message is limited such as with messages sent to a mobile phone, etc., select “Simple.”

Mail Account field

Mail Address:
Type the appropriate e-mail address. You can enter up to 64 characters.

Outgoing Mail Server (SMTP):
Type the address of the SMTP server. You can enter up to 64 characters.

Requires the use of POP Authentication before send email (POP before SMTP):
Select this check box to arrange that the POP authentication is performed before connecting to the SMTP server.

Incoming Mail Server (POP3):
Type the address of the POP3 server.

Account Name:
Type the mail account.

Password:
Type the mail password.

Send test mail:
Select the Send check box, then click “Apply” to send an e-mail message as a test to confirm whether it is sent to the specified addresses.

Notes

If the following items have not been set or are incorrectly set, an error message appears and the test e-mail message is disabled:

- Address in the Address field.
- “Mail Address” and “Outgoing Mail Server (SMTP)” in the Mail Account field.

Check the contents of the e-mail

The contents of the e-mail message to be sent appear.

Advanced setting

Click “Advanced Menu” to display the Advertisement button, PJ Talk button and SNMP button. These settings are mainly for professional use. For details, contact QUALIA Customer Service.

Lamp and filter maintenance

Replacing the lamp/air filter

When the lamp begins to dim, replace it promptly with a new one. Contact QUALIA Customer Service to replace the lamp.
The message “Please replace the Lamp/Filter.” is displayed when the remaining life of the lamp and the air filter reaches about 50 to 15 hours, and then again near the end. The lamp automatically turns off about one minute after it reaches the end of its life.
The lamp and the air filter should be replaced when a warning message is displayed on the screen. Contact QUALIA Customer Service to replace the lamp and the air filter.

Note

- If you keep on using this unit without replacing the air filter, the filter may start to clog with dust. If this happens and the internal temperature of the unit rises, the heat protection function may prevent the use of the projector. You may need to replace the filter earlier than suggested, depending on the environment in which you use the unit.

Note on parts replaccement

- Replaced parts may be recycled. In such a case, QUALIA Customer Service will collect the used parts.

Note for maintaining good performance

On fan noise

A cooling fan is installed in the projector. When the projector is turned on, you may hear some fan noise. If the fan emits unusual noise, contact QUALIA Customer Service.

On room lighting

Do not place the screen in any place where it will be subjected to direct sunlight or interior light. To obtain a clear picture, keep the following in mind:

- Use a convergent downlight.
- Use a diffuse light such as a fluorescent light through a mesh.
- Block any sunlight from windows with a curtain or blind.
- Cover reflective floors and walls with a carpet or wallpaper.

On care and maintenance

- Clean the projector surface and panels with a soft cloth. To remove greasy dirt, wipe it with a soft cloth slightly moistened with a mild detergent solution, then finish with a dry cloth. Before cleaning, make sure to unplug the projector.
- Do not touch or damage the lens.

On moisture condensation

If the projector is placed in a room where the heat has just been turned on, moisture condensation may occur. Since condensation may damage the projector, be sure to provide adequate air conditioning.
If moisture condenses on or inside the projector, leave the system turned on for about 2 hours until the moisture evaporates.

On the SXRD projector

Although the SXRD projector is made with precision technology, black dots may appear, or red, green or blue dots may not disappear from the pictures. Also, colors may blur and bright spots may appear. These are not malfunctions.

On use in a closed room

Air polluted by smoke, etc. may cause damage to the projector.
Prevent the projector from being directly exposed to smoke, etc.
It is important to provide proper ventilation in the room where the projector to be used.

Troubleshooting

If the projector appears to be operating erratically, follow the procedures outlined below.

1 Try to diagnose and correct the problem using the troubleshooting guide on page 76 to 81.

2 If the problem still persists, contact QUALIA Customer Service.

QUALIA Customer Service
Toll-free number:
1-877-782-5423

Power

Symptom	Cause/Remedy
The power does not turn on.	•If any message appears on the information panel display, contact QUALIA Customer Service. •Make sure that the batteries are inserted correctly, taking care to match the polarities when using the remote (see page 24). •The remote batteries are used up. Replace all of them with new ones, taking care to match the polarities (see page 24).

Picture

Symptom	Cause/Remedy
No picture.	•A cable is disconnected or not connected properly. Check that the proper connections have been made. •Invalid input setting. Set “Input-B Signal Sel.” correctly according to the input signal. •If “Frequency is out of range!” appears on the screen, a non-component signal such as that of a computer, etc. is input to the INPUT A connector. The INPUT A connector is only for component signal input. Use the INPUT B connector for non-component input signal. •The input selection is incorrect. Select the correct input source using the INPUT button (see page 27). •The picture is turned off. Press the PICTURE MUTING button to release the muting function (see page 27). •The computer signals are not being output from the computer to an external monitor. Set the computer signal so that it is output to an external monitor. •The computer signal is set to output to both the display of the computer and an external monitor. Set the computer signal so that it is output only to an external monitor.
The picture is noisy.	•If you input computer signals, some noise will appear in the background on certain screens depending on the number of dots in the input signals and display pixels. Adjust “Dot Phase” in the INPUT SETTING menu (see page 36).
On-screen display does not appear.	•“Status” in the MENU SETTING menu has been set to “Off.” Set “Status” in the MENU SETTING menu to “On” (see page 48).
The picture is not bright enough.	•Set “Contrast” and “Brightness” correctly in the PICTURE SETTING menu (see page 33).
The picture is blurred.	•Adjust the picture focus with the FOCUS button on the control panel or LENS CONT +/- on the remote.
The picture is discolored.	•Set “ADJUST PICTURE” correctly in the PICTURE SETTING menu. •Set “Color System” correctly in the MENU SETTING menu according to the input signal (see page 47). •A cable is disconnected or not connected properly. Check that the proper connections have been made. •Invalid input setting. Set “Input-B Signal Sel.” according to the input signal (see page 46). •A RGB signal is input to the INPUT A connector. The INPUT A connector is only for component signal input. Use the INPUT B connector for non-component input signals.

continued ···▸

Picture (continued)

Symptom	Cause/Remedy
The screen projection mode changes spontaneously.	•When a commercial comes on or a program changes, etc., the picture may be distorted for a few seconds. This is because the projector is selecting the most appropriate screen projection mode automatically according to the signal input. •The projector automatically selects the most appropriate screen projection mode according to the aspect ratio of the input signal. •If you select screen projection mode using the WIDE MODE button with “Auto Wide” set to “1” or “2,” the screen projection mode automatically changes according to the input signal. To retain the manually selected screen projection mode using the WIDE MODE button, set “Auto Wide” to “Off” (see page 37).

Remote

Symptom	Cause/Remedy
The remote does not work.	•There are no batteries in the remote. Install batteries (see page 24). •The remote batteries are used up. Replace all of them with new ones, taking care to match the polarities (see page 24). •The remote control cable is not connected to the CONTROL S IN connector (projector) or CONTROL S OUT (remote). Connect the remote control cable to both the projector and remote, or disconnect the cable. •The front/rear remote detector is near a fluorescent lamp.

Caution messages

Message	Cause/Remedy
x	•No input signal. Check the input connections.
“Not applicable!”	•Press the appropriate button.

Warning messages

Message	Cause/Remedy
“High temp.! Lamp off in 1min.”	•The internal temperature is too high. Turn off the power. Check to see that nothing is blocking the ventilation holes. Check to see if the air filter is clogged with dust. •Check to see whether or not the projector is tilted at an angle of more than 20 degrees.
“Frequency is out of range!”	•The input signal cannot be projected as the frequency is out of the acceptable range of the projector. Input a signal that is within the acceptable frequency range.
“Please check Input-B Signal sel.”	•Set “Input-B Signal Sel.” in the SET SETTING menu to “Computer” when an RGB signal is input from a computer (see page 46).
“Please check DVI Signal Sel.”	•Set “DVI Signal Sel.” in the SET SETTING menu to “Computer” when an RGB signal is input from a computer (see page 46). **Note** • Before you change the “DVI Signal Sel.” setting, disconnect the DVI cable and turn off the digital tuner, etc.
“Please replace the Lamp/Filter. Lamp/Filter life remainins less than 50H.”	•The lamp and the air filter life is running out. Contact QUALIA Customer Service.
“Please replace the Lamp/Filter. Lamp/Filter life remains less than 15H.”	•The lamp and the air filter life is running out. Contact QUALIA Customer Service.
“Please replace the Lamp/Filter. Lamp off in 1min.”	•It is time to replace the lamp and the air filter. Contact QUALIA Customer Service.
“High temp.! Probably use in high altitude. Switch to high altitude mode on? Yes /No”	•When using the projector at an altitude of 1,500 m or higher, press the ⬆ button. •If this message is displayed when using the projector at an altitude of less than 1,500 m, check to see if something is blocking the ventilation holes.
“Iris unit doesn't work.”	•The optical iris is damaged. Contact QUALIA Customer Service.

continued ····▶

Information panel display

Message	Cause/Remedy
COVER FAILURE	•The top cover or air filter is detached. Contact QUALIA Customer Service.
LAMP FAILURE	•The lamp has reached the end of its life. Contact QUALIA Customer Service. •Check to see whether or not the projector is being used at high altitudes. Contact QUALIA Customer Service. •The lamp temperature is high. Contact QUALIA Customer Service.
FAN FAILURE	•The fan is broken. Contact QUALIA Customer Service.
TEMP FAILURE	•The internal temperature is too high. Check to see if something is blocking the ventilation holes. Check to see if the air filter is clogged with dust. •Check to see whether or not the projector is being used at high altitudes. •Check to see whether or not the projector is tilted at an angle of more than 20 degrees. If the message persists, contact QUALIA Customer Service.
POWER SYSTEM FAILURE	•The electrical system has broken down. Contact QUALIA Customer Service.
IRIS FAILURE	•The optical iris is damaged. Contact QUALIA Customer Service.
LENS PROTECTOR FAILURE	•The lens protector is damaged. Contact QUALIA Customer Service.
Please check Input-B Signal Sel.	•Invalid input setting. Set “Input-B Signal Sel.” according to the input signal (see page 46).
Please check DVI Signal Sel.	•Invalid input setting. Set “DVI Signal Sel.” according to the input signal (see page 46).
Frequency is out of range!	•This input signal cannot be projected as the frequency is out of the acceptable range of the projector. Input a signal that is within the frequency range.

Information panel display (continued)

Message	Cause/Remedy
High temp! Switch to high altitude mode on?	•When using the projector at an altitude of 1,500 m or higher, press the ⬆ button.
Lamp/Filter life remains less than 50H.	•The remaining life of the lamp and the air filter is 50 hours. Contact QUALIA Customer Service.
Lamp/Filter life remains less than 15H.	•The remaining life of the lamp and the air filter is 15 hours. Contact QUALIA Customer Service.
End of Lamp/Filter life. Lamp off in 1min.	•The lamp and the air filter life has reached the end. The lamp is automatically turned off in about a minute. Contact QUALIA Customer Service.
High temp! Lamp off in 1min.	•The internal temperature is too high. The lamp is automatically turned off in about a minute. Contact QUALIA Customer Service.
Iris unit doesn't work.	•The optical iris unit does not work. Contact QUALIA Customer Service.

ImageDirector

Refer to the online help of the ImageDirector software when any messages are displayed on the screen while you are using the ImageDirector software.
For details on connected equipment such as a computer, etc., refer to the operating instructions supplied with that equipment.

Warranty card and after-sale services

- Please note that the warranty card for this product will be mailed to you in the next two to three weeks.
- Please verify entries and details in the warranty card, and keep it in a safe place.
- If you have any problems using the projector or if any accessory is missing, contact QUALIA Customer Service.

QUALIA Customer Service
Toll-free number:
1-877-782-5423

Specifications

Optical characteristics

Panel dispay
0.78-inch SXRD panel
6,220,800 pixels (2,073,600 × 3)

Lamp Pure xenon lamp

Projection picture size
Range: 40 to 300 inches
(16:9 screen as the basis)

Electrical characteristics

Color system
$NTSC_{3.58}$, PAL, SECAM,
$NTSC_{4.43}$,
PAL-M, PAL-N switched
automatically/manually

Acceptable range for computer signals
fH: 19 to 72 kHz, fV: 48 to 92 Hz

Input/Output

VIDEO IN VIDEO: Phono type
Composite video:1 Vp-p
±2 dB sync negative
(75 ohms terminated)
S VIDEO: Y/C mini DIN 4-pin type (female)
Y (luminance): 1 Vp-p
±2 dB sync negative
(75 ohms terminated)
C (chrominance): burst
0.286 Vp-p ±2 dB (NTSC)
(75 ohms terminated),
burst 0.3 Vp-p ±2 dB (PAL)
(75 ohms terminated)

INPUT A
Component/Progressive component/HD signal: Phono type

INPUT B
Component/Progressive component/HD signal/RGB: BNC type
G: 0.7 Vp-p ±2 dB (75 ohms terminated)
G with sync/Y: 1 Vp-p ±2 dB sync negative (75 ohms terminated)
B/C_B/P_B: 0.7 Vp-p ±2 dB (75 ohms terminated)
R/C_R/P_R: 0.7 Vp-p ±2 dB
(75 ohms terminated)
SYNC/HD: Composite sync input: 1-5 Vp-p high impedance, positive/negative
Horizontal sync input: 1-5 Vp-p high impedance, positive/negative
VD: Vertical sync input: 1-5 Vp-p high impedance, positive/negative

DVI-D (TMDS)
Digital RGB

HDMI Digital RGB/Y C_B(P_B) C_R(P_R)

REMOTE RS-232C: D-sub 9-pin (female)

CONTROL S IN/PLUG IN POWER
Stereo minijack 5 Vp-p

TRIGGER Minijack,
Power on: DC 12 V,
4.7 kohm output impedance
Power off: 0 V

NETWORK RJ-45

USB Type B

General

Dimensions 598 × 206 × 753 mm
(23 5/8 × 8 1/8 × 29 3/4 inches)
(w/h/d)

Mass Approx. 40 kg (88 lb 3 oz)

Power requirements
AC 100 to 240 V, 50/60 Hz

Power consumption
Max. 980 W (Standby mode: 7.8 W)

Operating temperature
0 °C to 35 °C (32 °F to 95 °F)

Operating humidity
35 % to 85 % (no condensation)

Storage temperature
-20 °C to +60 °C
(-4 °F to +140 °F)

Storage humidity
10 % to 90 %

Supplied accessories
Remote RM-PJR1F (1)
R03 (Size AAA) batteries (4)
AC power cord set (1)
“Owner's Guide” (this guide) (with a document case) (1)
CD-ROM (ImageDirector) (1)
End-User Licence Agreement (1)
Air filter cover (1)

Safety regulations
UL60950, CSA No. 950, FCC class B, IC class B, EN 60950 (NEMKO), CE, C-Tick

A nameplate that indicates the model and serial numbers is located beside the input jacks on the bottom of the projector.

Design and specifications are subject to change without notice.

Printed on 100% recycled paper using VOC (Volatile Organic Compound)-free vegetable oil based ink.

Warning on power connection
Use a proper power cord for your local power supply.

	The United States, Canada	Continental Europe	The United Kingdom, Ireland, Australia, New Zealand	Japan
Plug type	CAT-019	—	—	CAT-109
Female end	EF-28V	EF-28V	EF-28V	EF-28V
Cord type	SJT	H05VV-F	H05VV-F	HVCTF
Rated voltage & current	15 A/125 V	10 A/250 V	10 A/250 V	15 A/125 V
Safety approval	UL/CSA	VDE	VDE	DENANHO
Cord length (max.)	4.5 m	—	—	—

Specifications (Continued)

Dimensions

Front

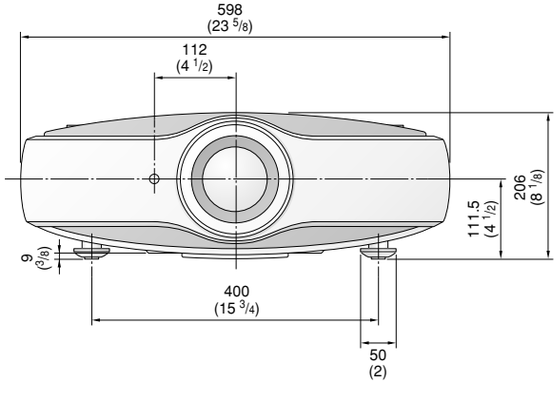

Side

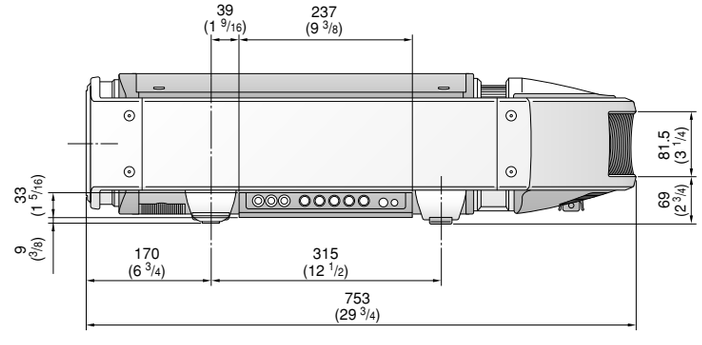

Top

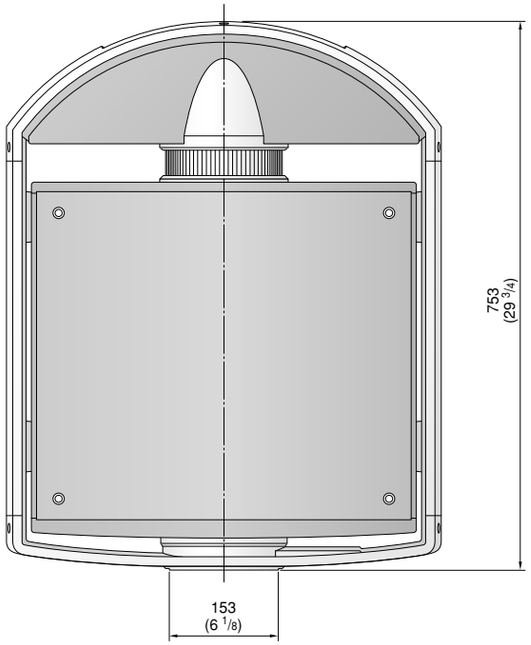

Bottom

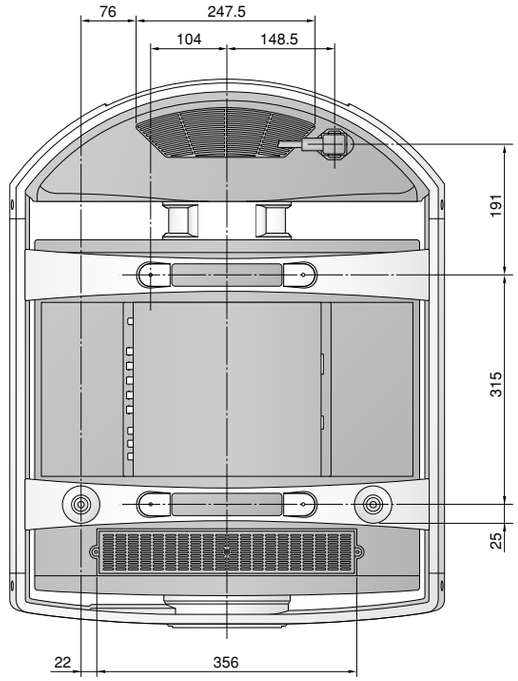

Unit: mm (inches)

Unit: mm (inches)

Index

A

AC IN socket 19
AC power cord 19
Adjusters 19
ADJUST PICTURE 33
ADJUST SIGNAL 36
Air filter 19, 74
AUTO WIDE SETTING 37

B

Background 50
Battery
  Inserting batteries 24
Black Level Adj. 33
Brightness 23, 33
BRIGHT +/– button 23

C

Caution messages 78
Ceiling Installation 60
CINEMA 23
Cinema 32
Cinema Black Pro 34
COLOR +/– button 23
Color Space 22, 47
COLOR SPACE button 22
Color System 47
Color Temp 34
Color temperature 23
COLOR TEMP button 23
Connections 64
Connector panel 64, 66
Contrast 23, 33
CONTRAST +/– button 23
Control panel 19, 20
CONTROL S IN jack 67
CONTROL S OUT jack 23

D

DDE Film 34
DDE Progressive 34
Default Gateway 51
DHCP 51
Direct Power On 29, 50
DNS Server 51
Dot Phase 36
DRC High Dens. 34
DRC Palette 34
DRC Progressive 34
DVI 22
DVI-D connector 22, 67
DVI Signal Sel. 46
DYNAMIC 23
Dynamic 32

E

Emphasizing the contrast 23, 34
ENTER button 21, 23, 30

F

Fan 75
fH 51
Focus 23
FOCUS button 21, 27
fV 51

G

GAMMA button 23
Gamma Correction 33, 52

H

HDMI 22, 67
High Altitude Mode 50, 57
H Size 36

I, J, K

I/P Mode 34
Illumination 47
ImageDirector 52, 81
Image Flip 49
INFORMATION 68
INFORMATION menu 51
Information Panel 47
Information panel display 19, 80
INPUT-B Signal Sel. 46
INPUT button 21, 22
INPUT SETTING menu 36
Input signal preset memory 42, 51
Installation 56, 58, 60
INSTALL SETTING menu 49
IP Address 51
Iris Control 23, 34
IRIS CONT button 23

L

Lamp Control 34
Lamp Timer 51, 74
Language 48
Lens 19, 58, 60, 63
LENS CONT button 23, 27
Lens protector 19

M

MAC address 51
Mail Report function 70
Maintenance 74
Menu 30
MENU button 21, 23, 30
Menu Color 48
Menu Position 48
MENU SETTING menu 48
Moisture condensation 75

N

NETWORK connector 67

O

Operating the projector from a computer 68

P, Q

PICTURE MODE 32
PICTURE MODE button 23
PICTURE MUTING button 22
PICTURE SETTING menu 32
Plug holder 19, 61
Power 27, 84
Power Saving 47
Projector suspension support 60, 62

R

Remote 22, 78
  Detector 19
  Infrared transmitter 23
REMOTE connector 67
RESET button 23

S

Screen projection mode 28, 41
Screen resolution 51
SET SETTING menu 46
Sharpness 33
Shift 23, 36
SHIFT button 21, 27
Source Direct 23, 47
SOURCE DIRECT button 23
Specifications 83
STANDARD/Standard 23, 32
Standby mode 21
Status (on-screen display) 48
Subnet Mask 51
S VIDEO 22

T

Test Pattern 50
Throwing distance 63
Title Area 41
TRIGGER jack 67

U

USB connector 67
USER 23

V

Ventilation hole
  Exhaust 19
  Intake 19
VIDEO 22
V Keystone 49
V Position 41

W, X, Y

Warning messages 79
Wide Mode 28, 40
WIDE MODE button 23
Wired remote 23

Z

Zoom 23, 40
ZOOM button 21, 27

Symbol/Number

I/⏻ (on/standby) button 21, 23
4:3 Default 37
↑/↓/←/→ (arrow) buttons 21, 23