4-246-802-**11**(1)

SONY®

FM Stereo FM/AM Receiver

Operating Instructions

Owner's Record

The model and serial numbers are located on the rear of the unit. Record the serial number in the space provided below. Refer to them whenever you call upon your Sony dealer regarding this product.

Model No. _____ Serial No. _____

STR-DA1000ES
STR-DB790

©2003 Sony Corporation

WARNING

To prevent fire or shock hazard, do not expose the unit to rain or moisture.

To prevent fire, do not cover the ventilation of the apparatus with news papers, table-cloths, curtains, etc. And don't place lighted candles on the apparatus.

To prevent fire or shock hazard, do not place objects filled with liquids, such as vases, on the apparatus.

Do not install the appliance in a confined space, such as a bookcase or built-in cabinet.

Don't throw away batteries with general house waste; dispose of them correctly as chemical waste.

For customers in the United States

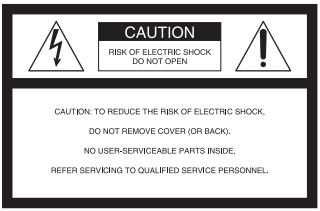

This symbol is intended to alert the user to the presence of uninsulated "dangerous voltage" within the product's enclosure that may be of sufficient magnitude to constitute a risk of electric shock to persons.

This symbol is intended to alert the user to the presence of important operating and maintenance (servicing) instructions in the literature accompanying the appliance.

CAUTION

You are cautioned that any changes or modification not expressly approved in this manual could void your authority to operate this equipment.

Note to CATV system installer:

This reminder is provided to call CATV system installer's attention to Article 820-40 of the NEC that provides guidelines for proper grounding and, in particular, specifies that the cable ground shall be connected to the grounding system of the building, as close to the point of cable entry as practical.

For customers in Canada

CAUTION

TO PREVENT ELECTRIC SHOCK, DO NOT USE THIS POLARIZED AC PLUG WITH AN EXTENSION CORD, RECEPTACLE OR OTHER OUTLET UNLESS THE BLADES CAN BE FULLY INSERTED TO PREVENT BLADE EXPOSURE.

Except for European model

ENERGY STAR® is a U.S. registered mark. As an ENERGY STAR® partner, Sony Corporation has determined that this product meets the ENERGY STAR® guidelines for energy efficiency.

About This Manual

- The instructions in this manual are for model STR-DA1000ES and STR-DB790. Check your model number by looking at the lower right corner of the front panel. In this manual, STR-DA1000ES is used for illustration purposes unless stated otherwise. Any difference in operation is clearly indicated in the text, for example, “STR-DA1000ES only”.
- The instructions in this manual describe the controls on the receiver. You can also use the controls on the supplied remote if they have the same or similar names as those on the receiver. For details on the use of your remote:
  – STR-DA1000ES:
  RM-LG112
  – STR-DB790:
  RM-PP412
  See the separate operating instructions supplied with the remote.

About area codes

The area code of the receiver you purchased is shown on the lower portion of the rear panel (see the illustration below).

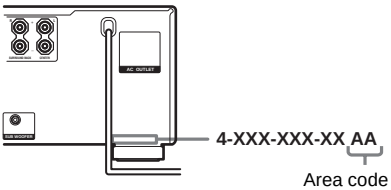

Any differences in operation, according to the area code, are clearly indicated in the text, for example, “Models of area code AA only”.

This receiver incorporates Dolby* Digital and Pro Logic Surround and the DTS** Digital Surround System.

* Manufactured under license from Dolby Laboratories.
“Dolby”, “Pro Logic” and the double-D symbol are trademarks of Dolby Laboratories.

** “DTS”, “DTS-ES Digital Surround”, and “Neo:6” are trademarks of Digital Theater Systems, Inc.

Table of Contents

Getting Started

1: Check how to hookup your components 6
1a: Connecting components with digital audio output jacks 8
1b: Connecting components with multi channel output jacks..... 11
1c: Connecting components with only analog audio jacks 13
2: Connecting the antennas 15
3: Connecting speakers 16
4: Connecting the AC power cord 19
5: Setting up the speakers 20
6: Adjusting the speaker levels and balance 23
— TEST TONE

Amplifier Operation

Selecting the component 24
Listening to multi channel sound 24
— MULTI CH IN
Listening to FM/AM radio 25
Storing FM stations automatically 26
— AUTOBETICAL
(Models of area code CEL, CEK only)
Presetting radio stations 26
Using the Radio Data System (RDS).... 27
(Models of area code CEL, CEK only)
Changing the display..... 29
About the indications in the display..... 30

Enjoying Surround Sound

Using only the front speakers 31
Enjoying higher fidelity sound..... 31
— AUTO FORMAT DIRECT
Selecting a sound field 32
Selecting the surround back decoding mode 34
— SURR BACK DECODING

Advanced Adjustments and Settings

Switching the audio input mode for digital components..... 36
— INPUT MODE
Customizing sound fields 36
Adjusting the equalizer..... 38
Advanced settings..... 38

Other Operations

Naming preset stations and inputs..... 42
Using the Sleep Timer 43
Selecting the speaker system 43
Recording 44
CONTROL A1**II** Control System 45

Additional Information

Precautions 46
Troubleshooting..... 47
Specifications 49
List of button locations and reference pages..... 52
Index 54

1: Check how to hookup your components

Steps 1a through 1c beginning on page 8 describe how to hook up your components to this receiver. Before you begin, refer to “Connectable components” below for the pages which describe how to connect each component.
After hooking up all your components, proceed to “2: Connecting the antennas” (page 15).

Connectable components

Component to be connected	Page
DVD player	
With digital audio output[a)]	8–9
With multi-channel audio output[b)]	11–12
With analog audio output only[c)]	8–9
TV monitor	
With component video input[d)]	9 or 12
With S-Video or composite video input only	14
Satellite tuner	
With digital audio output[a)]	8–9
With analog audio output only[c)]	8–9
CD/Super Audio CD player	
With multi-channel audio output[b)]	11
With analog audio output only[c)]	13
MD/Tape deck	
With digital audio output[a)]	10
With analog audio output only[c)]	13
Analog disc turntable	13
Multi-channel decoder	11
VCR, video camera, video game, etc.	14

a) Model with a DIGITAL OPTICAL OUTPUT or DIGITAL COAXIAL OUTPUT jack, etc.
b) Model with a MULTI CH OUTPUT jacks, etc. This connection is used to output the audio decoded by the component’s internal multi-channel decoder through this receiver.
c) Model equipped only with AUDIO OUT L/R jacks, etc.
d) Model with component video (Y, B-Y, R-Y) input jacks.

Required cords

The hookup diagrams on the subsequent pages assume the use of the following optional connection cords (A to H) (not supplied).

A Audio cord

White (L)
Red (R)

B Audio/video cord

Yellow (video)
White (L/audio)
Red (R/audio)

C Video cord

Yellow

D S-video cord

E Optical digital cord

F Coaxial digital cord

G Monaural audio cord

Black

Tip

Audio cord A can be torn into two monaural audio cords G.

H Component video cord

Green
Blue
Red

Notes

- Turn off the power to all components before making any connections.
- Be sure to make connections firmly to avoid hum and noise.
- When connecting an audio/video cord, be sure to match the color-coded pins to the appropriate jacks on the components: yellow (video) to yellow; white (left, audio) to white; and red (right, audio) to red.
- When connecting optical digital cords, insert the cord plugs straight in until they click into place.
- Do not bend or tie optical digital cords.

If you have Sony components with CONTROL A1II jacks

See “CONTROL A1II Control System” on page 45.

1a: Connecting components with digital audio output jacks

Hooking up a DVD player, TV, or satellite tuner

For details on the required cords (A–H), see page 7.

1 Connect the audio jacks.

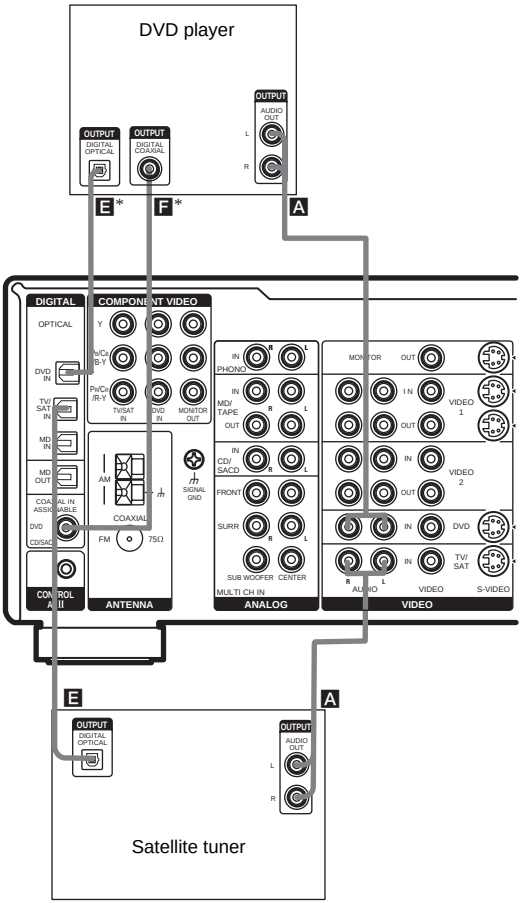

* Connect to either the ASSIGNABLE COAXIAL IN (DVD CD/SACD) or the OPTICAL DVD IN jack. We recommend making connections to the ASSIGNABLE COAXIAL IN (DVD CD/SACD) jack.

Note

You can listen to the sound of your TV by connecting your TV's audio output jacks to the TV/SAT AUDIO IN jacks on the receiver. In this case, do not connect the TV's video output jack to the TV/SAT VIDEO IN jack on the receiver.

2 Connect the video jacks.

The following illustration shows how to connect a TV or satellite tuner and a DVD player with COMPONENT VIDEO (Y, B-Y, R-Y) output jacks. Connecting a TV with component video input jacks allows you to enjoy higher quality video.

Note

On this receiver, the component video signals cannot be converted to S-video or standard video signals (or vice versa).

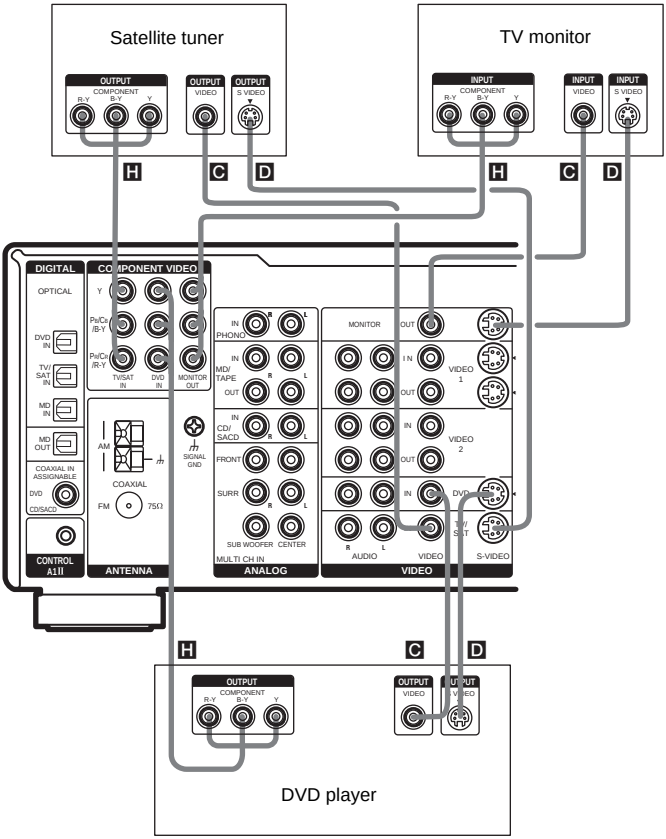

continued

Hooking up an MD/Tape deck

For details on the required cords (A–H), see page 7.

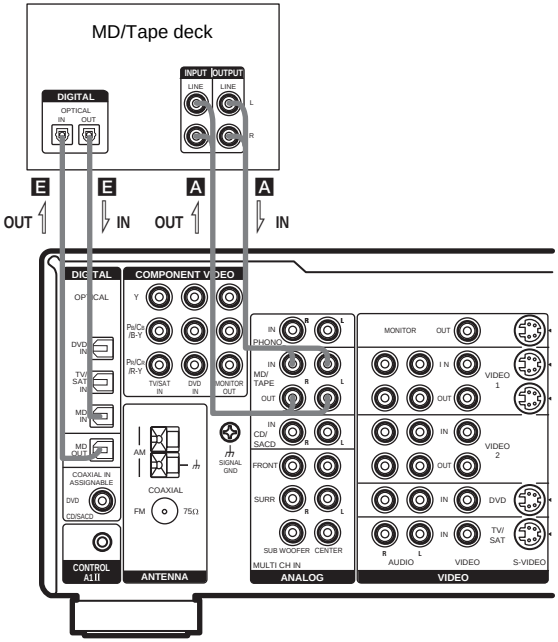

Tip

All the digital audio jacks are compatible with 32 kHz, 44.1 kHz, 48 kHz and 96 kHz sampling frequencies.

Note

You cannot make digital recordings of digital multi channel surround signals.

1b: Connecting components with multi channel output jacks

1 Connect the audio jacks.

If your DVD or Super Audio CD player is equipped with multi channel output jacks, you can connect it to this receiver's MULTI CH IN jacks to enjoy the multi channel sound. Alternatively, the multi channel input jacks can be used to connect an external multi channel decoder.
For details on the required cords (A–H), see page 7.

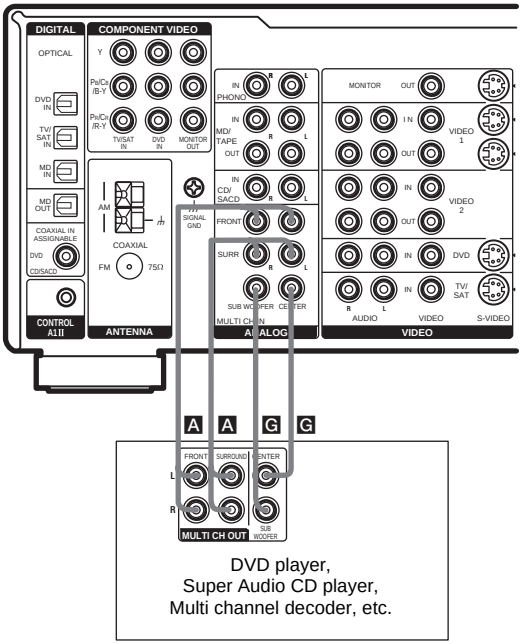

Tip

This connection also allows you to enjoy software with multi-channel audio recorded in formats other than the Dolby Digital, and DTS.

Note

When you make connections to the MULTI CH IN jacks, you will need to adjust the level of the surround speakers and sub woofer using the controls on the connected component.

continued

2 Connect the video jacks.

The following illustration shows how to connect a DVD player with COMPONENT VIDEO (Y, B-Y, R-Y) output jacks. Connecting a TV with component video input jacks allows you to enjoy higher quality video.

Notes

- On this receiver, the component video signals cannot be converted to S-video or standard video signals (or vice versa).
- The on-screen display will not appear on a TV connected to the COMPONENT VIDEO MONITOR OUT jack, even if you press ON SCREEN on the remote.

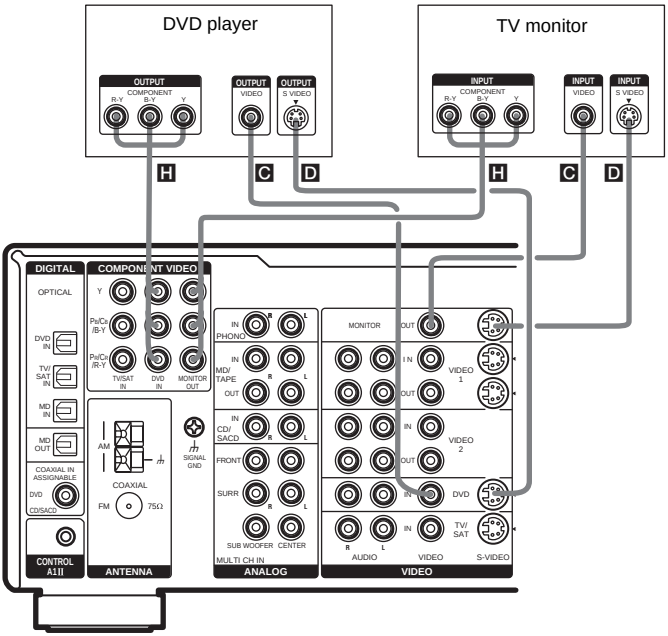

1c: Connecting components with only analog audio jacks

Hooking up audio components

For details on the required cords (A–H), see page 7.

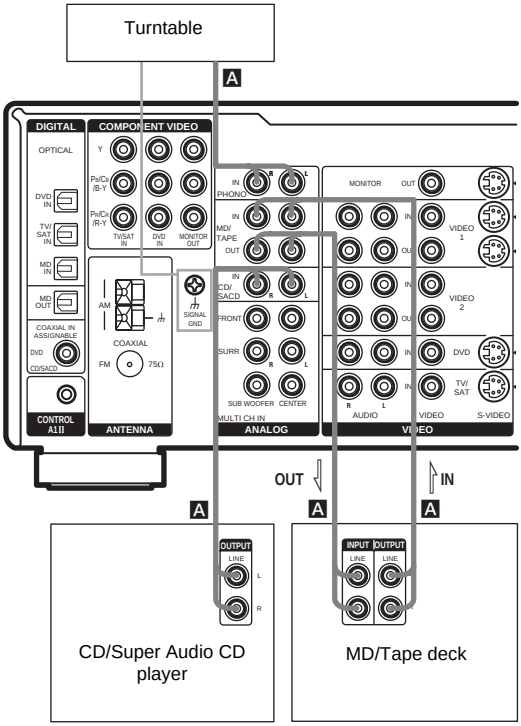

Note

If your turntable has a ground wire, connect it to the ⏚ SIGNAL GND terminal.

continued

Hooking up video components

If you connect your TV to the MONITOR jacks, you can watch the video from the selected input (page 24). For details on the required cords (A–H), see page 7.

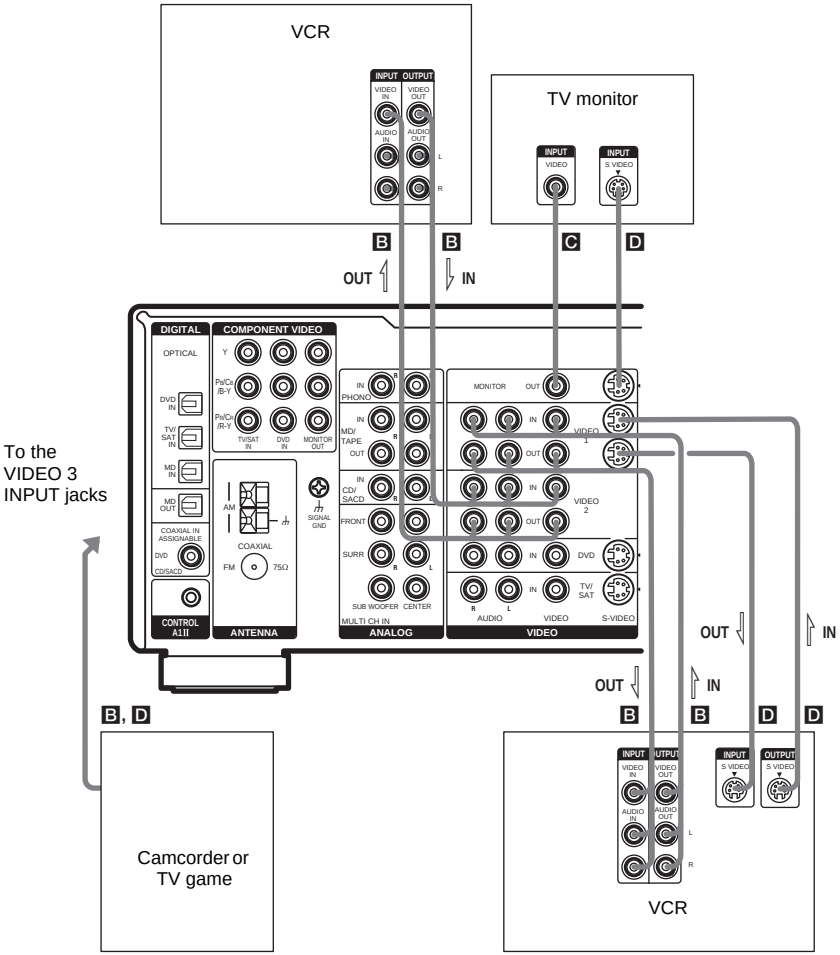

2: Connecting the antennas

Connect the supplied AM loop antenna and FM wire antenna.

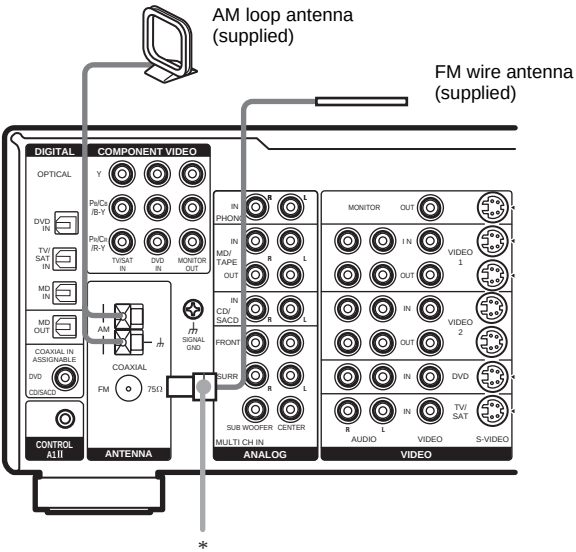

* The shape of the connector varies depending on the area code.

Notes

- To prevent noise pickup, keep the AM loop antenna away from the receiver and other components.
- Be sure to fully extend the FM wire antenna.
- After connecting the FM wire antenna, keep it as horizontal as possible.
- Do not use the ⏚ SIGNAL GND terminal for grounding the receiver.

3: Connecting speakers

Connect your speakers to the receiver. This receiver allows you to use a 7.1 channel system (STR-DA1000ES) or 6.1 channel speaker system (STR-DB790).
To fully enjoy theater-like multi channel surround sound requires five speakers (two front speakers, a center speaker, and two surround speakers) and a sub woofer (5.1 channel).
You can enjoy high fidelity reproduction of DVD software recorded in the Surround EX format if you connect one additional surround back speaker (6.1 channel) or two surround back speakers (7.1 channel, STR-DA1000ES only) (see “Selecting the surround back decoding mode” on page 34).

Example of 7.1 channel speaker system configuration

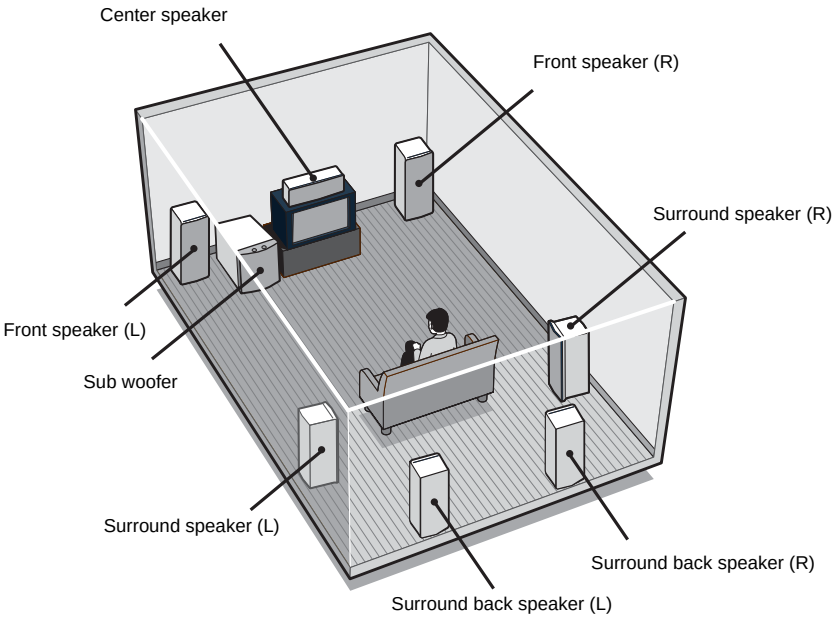

Tips

- When you connect 6.1 channel speaker system, place the surround back speaker right behind the listening position.
- Since the sub woofer does not emit highly directional signals, you can place it wherever you want.

Speaker impedance

To enjoy the best possible multi channel surround, connect speakers with a nominal impedance of 8 ohms or higher to the FRONT, CENTER, SURROUND and SURROUND BACK terminals, and set the IMPEDANCE SELECTOR to “8Ω”. Refer to the operating instructions supplied with your speakers if you are not sure of their impedance. (This information is often on the back of the speaker.)
Alternatively, you may connect speakers with nominal impedances between 4 and 8 ohms to any or all of the speaker terminals. However, be sure to set the IMPEDANCE SELECTOR to “4Ω” if you connect even one speaker with a nominal impedance between 4 and 8 ohms.

Note

Be sure to turn the power off before adjusting the IMPEDANCE SELECTOR.

Required cords

A Speaker cords (not supplied)

(+)
(–)

B Monaural audio cord (not supplied)

Black

STR-DA1000ES

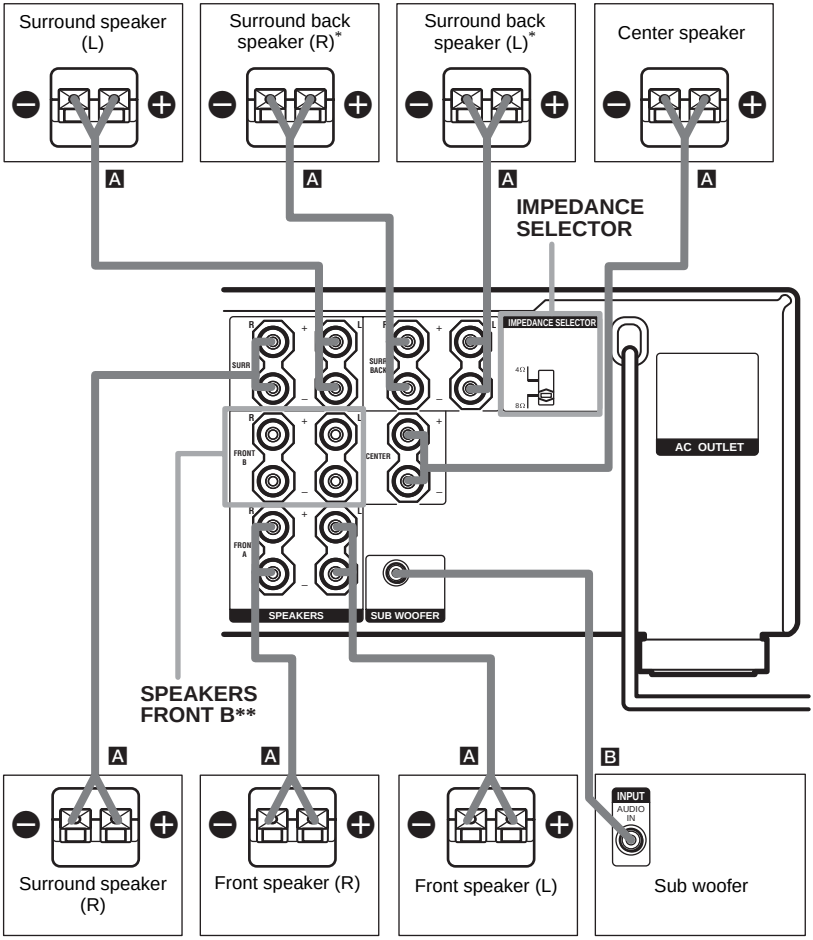

* You can select the front speakers you want to use with SPEAKERS. For details, see "Selecting the speaker system" (page 43).

**If you connect only one surround back speaker, connect it to the SPEAKERS SURR BACK L terminal.

continued

STR-DB790

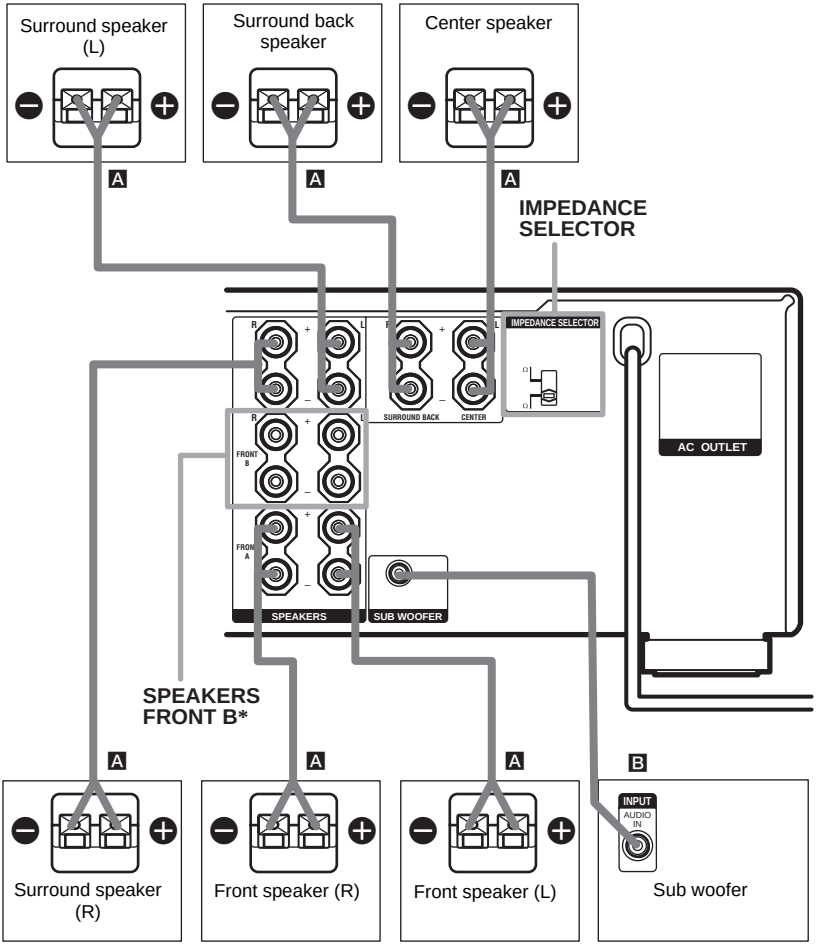

* You can select the front speakers you want to use with SPEAKERS. For details, see “Selecting the speaker system” (page 43).

4: Connecting the AC power cord

Connect the AC power cord to a wall outlet.

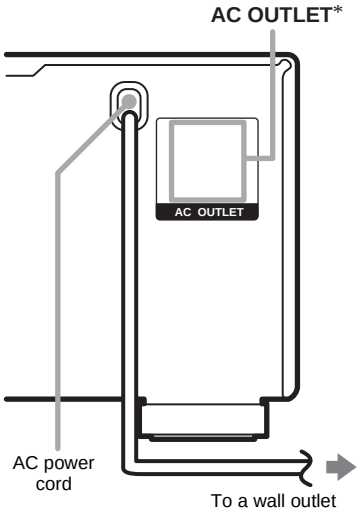

* Except for models of area code KR.
The configuration, shape, and number of AC outlets vary according to the model and the area code.

Notes

- The AC OUTLET(s) on the rear of the receiver is a switched outlet, which supplies power to the connected component only while the receiver is turned on.
- Make sure that the total power consumption of the component(s) connected to the receiver's AC OUTLET(s) does not exceed the wattage stated on the rear panel. Do not connect high-wattage electrical home appliances such as electric irons, fans, or TVs to this outlet. This may cause a malfunction.

Performing initial setup operations

Before using the receiver for the first time, initialize the receiver by performing the following procedure.
This procedure can also be used to return settings you have made to their factory defaults.

1 **Press I/⏻ to turn off the receiver.**

2 **Hold down I/⏻ for 5 seconds.**

"INITIAL" appears in the display.
The following are reset to their factory settings.

- All settings in the SP SETUP, LEVEL, EQ, CUSTOMIZE and TUNER menus.
- The sound field memorized for each input and preset station.
- All preset stations.
- All index names for inputs and preset stations.

5: Setting up the speakers

You can use the SP SETUP menu to set the size and distance of the speakers connected to this system.

1 Press I/⏻ to turn on the system.

2 Press MAIN MENU repeatedly to select "SP SETUP".

3 Rotate MENU to select the menu item you want.

For more information, see "Speaker setup parameters".

Note

Some speaker setup items may appear dimmed in the display. This means that they have been adjusted automatically due to other speaker settings. Depending on the settings, you may or may not be able to adjust certain speakers.

4 Rotate –/+ to select the parameter.

5 Repeat steps 3 and 4 until you have set all of the items that follow.

Speaker setup parameters

The initial settings are underlined.

■ XXXX SET (Speaker easy setup)

- EASY SET
  You can set up your speakers automatically by selecting a pre-defined speaker pattern (see the supplied "Easy Setup Guide").
- NORM. SET
  Select to adjust the settings of each speaker manually.

■ SP PAT. XXX (Speaker setup pattern)

When you select EASY SET, select the speaker setup pattern. Rotate –/+ to select the speaker setup pattern and press MEMORY/ENTER to enter the selection. Check your speaker pattern using the supplied "Easy Setup Guide".

■ SW (SUB WOOFER) (Sub woofer)

- YES
  If you connect a sub woofer, select "YES".
- NO
  If you did not connect a sub woofer, select "NO". The front speakers are automatically set to "LARGE". This activates the bass redirection circuitry and outputs the LFE signals from other speakers.

■ L R (FRONT) (Front speakers)

- LARGE
  If you connect large speakers that will effectively reproduce bass frequencies, select "LARGE". Normally, select "LARGE".
- SMALL
  If the sound is distorted, or you feel a lack of surround effects when using multi channel surround sound, select "SMALL" to activate the bass redirection circuitry and output the front channel bass frequencies from the sub woofer. When the front speakers are set to "SMALL", the center, surround and surround back speakers are also automatically set to "SMALL" (unless previously set to "NO").

■ C (CENTER) (Center speaker)

- LARGE
  If you connect a large speaker that will effectively reproduce bass frequencies, select "LARGE". Normally, select "LARGE". However, if the front speakers are set to "SMALL", you cannot set the center speaker to "LARGE".
- SMALL
  If the sound is distorted, or you feel a lack of surround effects when using multi channel surround sound, select "SMALL" to activate the bass redirection circuitry and output the center channel bass frequencies from the front speakers (if set to "LARGE") or sub woofer.
- NO or MIX
  If you did not connect a center speaker, select "NO" or "MIX". The sound of the center channel will be output from the front speakers.
  When you select "MIX", the sound of the center channel will be output from the front speakers through analog processing (analog downmix) if the front speakers are set to "LARGE". This reproduces better sound than digital processing. When the multi channel input is selected, analog downmixing is performed whether the setting is "NO" or "MIX".

■ SL SR (SURROUND) (Surround speakers)

- LARGE
  If you connect large speakers that will effectively reproduce bass frequencies, select “LARGE”. Normally, select “LARGE”. However, if the front speakers are set to “SMALL”, you cannot set the surround speakers to “LARGE”.
- SMALL
  If the sound is distorted, or you feel a lack of surround effects when using multi channel surround sound, select “SMALL” to activate the bass redirection circuitry and output the surround channel bass frequencies from the sub woofer or other “LARGE” speakers.
- NO
  If you did not connect surround speakers, select “NO”.

■ SB (SURR BACK) (Surround back speakers)

STR-DA1000ES

- DUAL
  If you connect two surround back speakers, select “DUAL”. The sound will be output to a maximum of 7.1 channels.
- SINGLE
  If you connect only one surround back speaker, select “SINGLE”. The sound will be output to a maximum of 6.1 channels.
- NO
  If you did not connect surround back speakers, select “NO”.

STR-DB790

- YES
  If you connect a surround back speaker, select “YES”.
- NO
  If you did not connect surround back speaker, select “NO”.

Tip

The “LARGE” and “SMALL” settings for each speaker determine whether or not the internal sound processor will cut the bass signal from that channel. When the bass is cut from a channel, the bass redirection circuitry sends the corresponding bass frequencies to the sub woofer or other “LARGE” speakers.

However, it best not to cut them, if possible. Therefore, even when using small speakers, you can set them to “LARGE” if you want to output the bass frequencies from that speaker. On the other hand, if you are using a large speaker, but prefer not to have bass frequencies output from that speaker, set it to “SMALL”.

If the overall sound level is lower than you prefer, set all speakers to “LARGE”. If there is not enough bass, you can use the equalizer to boost the bass levels. To adjust the equalizer, see page 38.

■ L R DIST. X.X m (Front speaker distance)

Initial setting: 3.0 m (10 ft)

Lets you set the distance from your listening position to the front speakers (A). You can adjust from 1.0 meter to 7.0 meters (3 to 23 feet) in 0.1 meter (1 foot) steps.

If both front speakers are not placed an equal distance from your listening position, set the distance to the closest speaker.

When placing only one surround back speaker

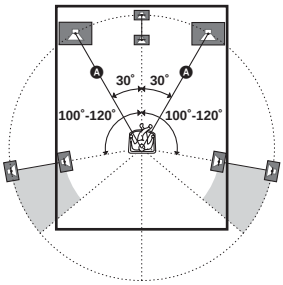

When placing two surround back speakers
(The angle B shoule be the same)

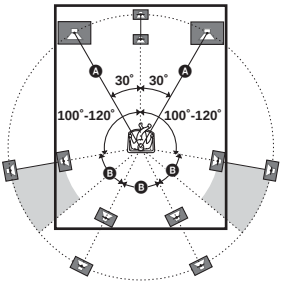

■ C DIST. X.X m (Center speaker distance)

Initial setting: 3.0 m (10 ft)

continued

Lets you set the distance from your listening position to the center speaker. You can adjust from 1.0 meter to 7.0 meters (3 to 23 feet) in 0.1 meter (1 foot) steps.

■ SL SR DIST. X.X m (Surround speaker distance)

Initial setting: 3.0 m (10 ft)

Lets you set the distance from your listening position to the surround speakers. You can adjust from 1.0 meter to 7.0 meters (3 to 23 feet) in 0.1 meter (1 foot) steps.

If both surround speakers are not placed an equal distance from your listening position, set the distance to the closest speaker.

■ SB DIST. X.X m (Surround back speaker distance)

Initial setting: 3.0 m (10 ft)

Lets you set the distance from your listening position to the surround back speaker. You can adjust from 1.0 meter to 7.0 meters (3 to 23 feet) in 0.1 meter (1 foot) steps.

If you connect two surround back speakers and both surround back speakers are not placed an equal distance from your listening position (STR-DA1000ES only), set the distance to the closest speaker.

Tip

The receiver lets you to input the speaker position in terms of distance. However, it is not possible to set the center speaker further than the front speakers. Also, the center speaker cannot be set more that 1.5 meters (5 feet) closer than the front speakers.

Likewise, the surround speakers can not be set farther away from the listening position than the front speakers. And they can be no more than 4.5 meters (15 feet) closer.

This is because incorrect speaker placement is not conducive to the enjoyment of surround sound.

Please note that, setting the speaker distance closer than the actual location of the speakers will cause a delay in the output of the sound from that speaker. In other words, the speaker will sound like it is farther away.

For example, setting the center speaker distance 1–2 meters (3–6 feet) closer than the actual speaker position will create a fairly realistic sensation of being “inside” the screen. If you cannot obtain a satisfactory surround effect because the surround speakers are too close, setting the surround speaker distance closer (shorter) than the actual distance will create a larger sound stage.

Adjusting these parameter while listening to the sound often results in much better surround sound. Give it a try!

For advanced speaker setups

Use the CUSTOMIZE menu and set “MENU” to “MENU EXP.”. This enables advanced setups including those of the heights of the surround speakers.

For details on “MENU”, see page 38. For details on how to set the items, see page 39.

6: Adjusting the speaker levels and balance

— *TEST TONE*

Adjust the speaker levels and balance while listening the test tone from your listening position. Use the remote for the operation.

Tip

The receiver employs a test tone with a frequency centered at 800 Hz.

1 **Press I/⏻ on the remote to turn on the receiver.**

2 **Press TEST TONE on the remote.**

"T.TONE" appears in the display and the test tone is output from each speaker in sequence.

3 **Adjust the speaker level and balance using the LEVEL menu so that the level of the test tone sounds the same from each speaker.**

For details on the LEVEL menu settings, see page 36.

Tips

- To adjust the level of all speakers at the same time, press MASTER VOL +/– on the remote or turn MASTER VOLUME –/+ on the receiver.
- You can also use –/+ on the receiver for the adjustment.

4 **Press TEST TONE again after adjustment.**

The test tone turns off.

To output the test tone only from a specific speaker

Set "T.TONE" in the LEVEL menu to "FIX" (page 36). The test tone is output only from the selected speaker.

For more precise adjustment

You can output the test tone or sound source from two adjacent speakers to adjust their balance and level.
Set "MENU" in the CUSTOMIZE menu to "MENU EXP." (page 38). Then select the two speakers you want to adjust using "P.NOISE" or "P.AUDIO" in the LEVEL menu (page 41).

Note

The test tone cannot be used when ANALOG DIRECT or MULTI CH IN function is used.

Selecting the component

1 **Rotate INPUT SELECTOR to select the input.**

The selected input appears in the display.

To select the	Display
VCR	VIDEO 1 or VIDEO 2
Camcorder or TV game	VIDEO 3
DVD player	DVD
Satellite tuner	TV/SAT
MD or tape deck	MD/TAPE
CD or Super Audio CD player	CD/SACD
Built-in tuner (FM)	Tuner (FM)
Built-in tuner (AM)	Tuner (AM)
Turntable	PHONO

2 **Turn on the component and start playback.**

3 **Rotate MASTER VOLUME –/+ to adjust the volume.**

To mute the sound

Press MUTING on the remote.

Notes on using headphones

- When headphones are connected, you can select only the following sound fields (page 33).
  - HEADPHONE (2CH)
  - HEADPHONE THEATER
- When headphones are connected and you use the MULTI CH IN function (see "Listening to multi channel sound"), the sound of all channels may not output depending on the speaker settings.

Listening to multi channel sound

— MULTI CH IN

You can select the audio directly from the components connected to the MULTI CH IN jacks. This enables you to enjoy high quality analog inputs like DVD or Super Audio CD. Also see "D.PWR." (page 39).
Surround effects are not activated when using this input.

STR-DA1000ES

Move the easy scroll key on the remote to select "MULTI CH", then press the key to enter the selection.

STR-DB790

Press MULTI CH on the remote.

When a center speaker or sub woofer is not connected

If you have set the center speaker to "NO" or "MIX", or set the sub woofer to "NO" in the SP SETUP menu (page 20), and you activate the MULTI CH IN function, the analog center or sub woofer audio will be output from the front left and right speakers.

Listening to FM/AM radio

You can listen to FM and AM broadcasts through the built-in tuner. Before operation, make sure you have connected the FM and AM antennas to the receiver (see page 15).

Tip

The tuning scale for direct tuning differs depending on the model.

Model	FM	AM
STR-DA1000ES	100 kHz	10 kHz*
STR-DB790	50 kHz	9 kHz

* The AM tuning scale can be changed (see page 50).

Automatic tuning

1 Rotate INPUT SELECTOR to select FM or AM.

2 Press TUNING + or TUNING –.

Press TUNING + to scan from low to high; press TUNING – to scan from high to low.

The receiver stops scanning whenever a station is received.

Direct tuning

Enter a frequency of the station directly by using the numeric buttons on the remote.
For details on the supplied remote, refer to the operating instructions supplied with the remote.

1 STR-DA1000ES:
Move the easy scroll key on the remote to select "TUNER", then press the key repeatedly to select FM or AM.
STR-DB790:
Press TUNER on the remote repeatedly to select FM or AM.

You can also use INPUT SELECTOR on the receiver.

2 Press ALT, then press D.TUNING on the remote.

3 Press the numeric buttons on the remote to enter the frequency.

Example 1: FM 102.50 MHz

(1) → (0) → (2) → (5) → (0)

Example 2: AM 1,350 kHz
(You don't have to enter the last "0" when the tuning scale is set to 10 kHz.)

(1) → (3) → (5) → (0)

If you've tuned in an AM station, adjust the direction of the AM loop antenna for optimum reception.

If you cannot tune in a station and the entered numbers flash

Make sure you've entered the right frequency. If not, repeat step 3. If the entered numbers still flash, the frequency is not used in your area.

Storing FM stations automatically

— AUTOBETICAL

(Models of area code CEL, CEK only)

This function lets you store up to 30 FM and FM RDS stations in alphabetical order without redundancy. Additionally, it only stores the stations with the clearest signals.

If you want to store FM or AM stations one by one, see "Presetting radio stations".

1 **Press I/⏻ to turn off the receiver.**

2 **Hold down MEMORY/ENTER and press I/⏻ to turn the receiver back on.**

"AUTO-BETICAL SELECT" appears in the display and the receiver scans and stores all the FM and FM RDS stations in the broadcast area.

For RDS stations, the tuner first checks for stations broadcasting the same program, then stores only the one with the clearest signal. The selected RDS stations are sorted alphabetically by their Program Service name, then assigned a 2-character preset code. For more details on RDS, see page 27.

Regular FM stations are assigned 2-character preset codes and stored after the RDS station.

When done, "FINISH" appears in the display momentarily and the receiver returns to the normal operation.

Notes

- Do not press any button on the receiver or supplied remote during autobetical operation, except **I/⏻**.
- If you move to another area, repeat this procedure to store stations in your new area.
- For details on tuning the stored stations, see "Tuning to preset stations".
- If you move the antenna after storing stations with this procedure, the stored settings may no longer be valid. If this happens, repeat this procedure to store the stations again.

Presetting radio stations

You can preset up to 30 FM or AM stations. Then you can easily tune in the stations you often listen to.

Presetting radio stations

1 **Rotate INPUT SELECTOR to select FM or AM.**

2 **Tune in the station that you want to preset using Automatic Tuning (page 25) or Direct Tuning (page 25).**

3 **Press MEMORY/ENTER.**

"MEMORY" appears in the display for a few seconds. Do steps 4 to 5 before the display goes out.

4 **Press PRESET TUNING + or PRESET TUNING – to select a preset number.**

If you want to switch the memory page, press SHIFT on the remote.

If "MEMORY" goes out before you select the preset number, start again from step 3.

5 **Press MEMORY/ENTER again.**

The station is stored to the selected preset number.

If "MEMORY" goes out before you press MEMORY/ENTER, start again from step 3.

6 **Repeat steps 2 to 5 to preset another station.**

Tuning to preset stations

1 **Rotate INPUT SELECTOR to select FM or AM.**

2 **Press PRESET TUNING + or PRESET TUNING – repeatedly to select the preset station you want.**

Each time you press the button, you can select the preset station as follows:

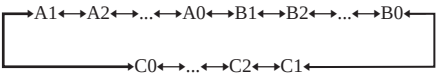

Using the remote

1 STR-DA1000ES:
Move the easy scroll key to select “TUNER”, then press the key repeatedly to select FM or AM.

STR-DB790:
Press TUNER repeatedly to select FM or AM.

2 Press D.SKIP/CH/PRESET +/– repeatedly to select the preset station you want.

To select the Preset station directly

Press the numeric buttons on the remote.

The preset station of the selected number in the current memory page is tuned in. Press SHIFT on the remote to change the memory page.

Using the Radio Data System (RDS)

(Models of area code CEL, CEK only)

This receiver also allows you to use RDS (Radio Data System), which enables radio stations to send additional information along with the regular program signal. You can also display RDS information.

Receiving RDS broadcasts

Simply select a station on the FM band using direct tuning (page 25), automatic tuning (page 25), or preset tuning (page 26).

When you tune in a station that provides RDS services, the RDS indicator lights up and the program service name appears in the display.

Note

RDS may not work properly if the station you tuned to is not transmitting the RDS signal properly or if the signal strength is weak.

Displaying RDS information

While receiving an RDS station, press DISPLAY.

Each time you press the button, RDS information on the display changes cyclically as follows:
PS (Program Service name) or preset station name[a] → Frequency[b] → PTY (Program Type) indication[c] → RT (Radio Text) indication[d] → CT (Current Time) indication (in 24-hour system) → Sound field currently applied → Volume level

a) This information appears only when PS is received or the preset station is indexed.
b) This information also appears for non-RDS FM stations.
c) Type of program being broadcast (see page 28).
d) Text messages sent by the RDS station.

Notes

- If there is an emergency announcement by government authorities, “ALARM” flashes in the display.

continued

- If a station does not provide a particular RDS service, “NO XX” (such as “NO CT”) appears in the display.
- When a station broadcasts radio text data, it is displayed at the same rate at which it is sent from the station. Any change in this rate is reflected in the display rate of the data.

Description of program types

Program type indication	Description
NEWS	News programs
AFFAIRS	Topical programs that expand on current news
INFO	Programs offering information on a wide spectrum of subjects, including consumer affairs and medical advice
SPORT	Sports programs
EDUCATE	Educational programs, such as “how-to” and advice programs
DRAMA	Radio plays and serials
CULTURE	Programs about national or regional culture, such as language and social concerns
SCIENCE	Programs about the natural sciences and technology
VARIED	Other types of programs such as celebrity interviews, panel games, and comedy
POP M	Popular music programs
ROCK M	Rock music programs
EASY M	Easy Listening
LIGHT M	Instrumental, vocal, and choral music
CLASSICS	Performances of major orchestras, chamber music, opera, etc.
OTHER M	Music that does not fit into any categories above, such as Rhythm & Blues and Reggae
WEATHER	Weather information
FINANCE	Stock market reports and trading, etc.
CHILDREN	Programs for children
SOCIAL	Programs about people and the things that affect them
RELIGION	Programs of religious content
PHONE IN	Programs where members of the public express their views by phone or in a public forum
TRAVEL	Programs about travel. Not for announcements that are located by TP/TA.
LEISURE	Programs on recreational activities such as gardening, fishing, cooking, etc.
JAZZ	Jazz programs
COUNTRY	Country music programs
NATION M	Programs featuring the popular music of the country or region
OLDIES	Programs featuring oldies music
FOLK M	Folk music programs
DOCUMENT	Investigative features
NONE	Any programs not defined above

Changing the display

Changing the information in the display

You can check the sound field etc. by changing the information in the display.

Press DISPLAY repeatedly.

Each time you press DISPLAY, the display will change as follows.
Index name* → Input name → Sound field name → Volume level

* Index name appears only when you have assigned one to the input or preset station (page 42). Index name does not appear when only blank spaces have been entered, or it is the same as the input name.

About the indications in the display

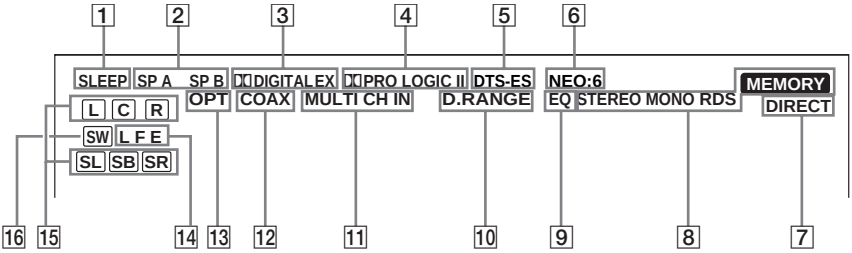

1 **SLEEP:** Lights up when sleep timer is activated.

2 **SPA/SPB:** Lights up in accordance with the speaker system being used (A or B). Turns off when headphones are connected.

3 **DIGITAL (EX):** Lights up when the receiver is decoding signals recorded in the Dolby Digital format.

4 **PRO LOGIC (II):** Lights up when the receiver applies Pro Logic processing to 2 channel signals in order to output the center and surround channel signals. This indicator also lights when the Pro Logic **II** movie/music decoder is activated. However, this indicator does not light if both the center and surround speakers are set to "NO".

5 **DTS (-ES):** Lights up when DTS signals are input.

6 **NEO:6:** Lights up when DTS Neo:6 cinema/ music mode decoding is activated.

7 **DIRECT:** Lights up when the ANALOG DIRECT function is activated.

8 **Tuner indicators:** Lights up when using the receiver to tune in radio stations, etc. See pages 25–28 for tuner operations.

9 **EQ:** Lights up when the equalizer is activated.

10 **D.RANGE:** Lights up when dynamic range compression is activated (page 41).

11 **MULTI CH IN:** Lights up when adjusting the multi channel sub woofer level.

12 **COAX:** Lights up when the source signal is a digital signal being input through the COAXIAL terminal.

13 **OPT:** Lights up when the source signal is a digital signal being input through the OPTICAL terminal.

14 **LFE:** Lights up when the disc being played back contains the LFE (Low Frequency Effect) channel and the LFE channel signal is actually being reproduced.

15 **Playback channel indicators:** The letters (L, C, R, etc.) indicate the channels being played back. The boxes around the letters vary to show how the receiver downmixes the source sound (based on the speakers settings).

L (Front Left), R (Front Right), C (Center (monaural)), SL (Surround Left), SR (Surround Right), S (Surround (monaural or the surround components obtained by Pro Logic processing)), SB (Surround Back (the surround back components obtained by 6.1 channel decoding))

Example:

Recording format (Front /Surround): 3/2

Output channel: Surround speakers absent

Sound Field: A.F.D. AUTO

16 **SW:** Lights up when sub woofer selection is set to "YES" (page 20). While this indicator lights up, the receiver generates a low frequency signal for output to the sub woofer. This indicator does not light during the 2CH STEREO mode.

Using only the front speakers

In this mode, the receiver outputs the sound from the front L/R speakers only. There is no sound from the sub woofer.

Listening to 2 channel stereo sources (2CH STEREO)

Standard 2 channel stereo sources completely bypass the sound field processing and multi channel surround formats are downmixed to 2 channel.

Press 2CH.

"2CH ST." appears in the display and the receiver switches to the 2CH STEREO mode.

Note

No sound is output from the sub woofer in the 2CH STEREO mode. To listen to the 2 channel stereo sources using the front L/R speakers and a sub woofer, set to the A.F.D. mode.

Listening to analog audio (ANALOG DIRECT)

You can switch the audio of the selected input to the two channel analog input. This function enables you to enjoy high quality analog sources. Also see "D.PWR." on page 39. When using this function, only the volume and front speaker balance can be adjusted.

1. **Rotate INPUT SELECTOR to select the input you want to listen to in analog audio.**
2. **Press DIRECT on the remote.**
   "A.DIRECT" appears in the display and the analog audio is output.

Notes

- This function is cancelled when you switch the sound field (pages 31-33).
- When this function is used, test tone function cannot be used.

Enjoying higher fidelity sound

— AUTO FORMAT DIRECT

The Auto Format Direct (A.F.D.) mode allows you to select the decoding mode you want for your audio sound.

A.F.D. mode (Display)	Decoding mode
A.F.D. AUTO (A.F.D. AUTO)	As encoded
PRO LOGIC (DOLBY PL)	Dolby Pro Logic
PRO LOGIC II MOVIE (PLII MOV)	Dolby Pro Logic II
PRO LOGIC **II** MUSIC (PLII MUS)	
Neo:6 Cinema (NEO6 CIN)	DTS Neo:6
Neo:6 Music (NEO6 MUS)	

Decoding the input audio signal automatically

In this mode, the receiver automatically detects the type of audio signal being input (Dolby Digital, DTS, standard 2 channel stereo, etc.) and performs the proper decoding if necessary. This mode presents the sound as it was recorded/encoded, without adding any surround effects. However, if there are no low frequency signals (Dolby Digital LFE, etc.) it will generate a low frequency signal for output to the sub woofer.

Press A.F.D. repeatedly to select "A.F.D. AUTO".

The receiver automatically detects the type of audio signal being input and performs the proper decoding if necessary.

Tip

In most cases, "A.F.D. AUTO" provides the most appropriate decoding. You may want to use SURR BACK DECODING (page 34) to match the input stream to the mode you prefer.

continued

Enjoying stereo sound in multi channel (2 channel decoding mode)

This mode lets you specify the type of decoding for 2 channel audio sources. This receiver can reproduce 2 channel sound in 5 channels through Dolby Pro Logic II; 6 channels through DTS Neo:6; or 4 channels through Dolby Pro Logic. However, DTS 2CH sources are not decoded by DTS Neo:6; they are output in 2 channels.

Press A.F.D. repeatedly to select the 2 channel decoding mode.

■ PRO LOGIC

Performs Dolby Pro Logic decoding. The source recorded in 2 channel is decoded into 4.1 channels.

■ PRO LOGIC II MOVIE

Performs Dolby Pro Logic **II** Movie mode decoding. This setting is ideal for movies encoded in Dolby Surround. In Addition, this mode can reproduce sound in 5.1 channel when watching videos of overdubbed or old movies.

■ PRO LOGIC II MUSIC

Performs the Dolby Pro Logic **II** Music mode decoding. This setting is ideal for normal stereo sources such as CDs.

■ Neo:6 Cinema

Performs the DTS Neo:6 Cinema mode decoding.

■ Neo:6 Music

Performs the DTS Neo:6 Music mode decoding. This setting is ideal for normal stereo sources such as CDs.

If you connect a sub woofer

When the audio signal is 2 channel stereo or if the source signal does not include a LFE signal, the receiver generates a low frequency signal for output to the sub woofer. However the low frequency signal is not generated when “Neo:6 Cinema” or “Neo:6 Music” is selected.

Selecting a sound field

You can take advantage of surround sound simply by selecting one of the receiver’s pre-programmed sound fields. They bring the exciting and powerful sound of movie theaters and concert halls into your home.

Selecting a sound field for movies

Press MOVIE repeatedly to select the sound field you want.

The selected sound field appears in the display.

Sound field	Display
CINEMA STUDIO EX A DCS	C.ST.EX A
CINEMA STUDIO EX B DCS	C.ST.EX B
CINEMA STUDIO EX C DCS	C.ST.EX C
VIRTUAL MULTI DIMENSION DCS	V.M.DIM

About DCS (Digital Cinema Sound)

Sound fields with DCS marks use DCS technology.
DCS is the concept name of the surround technology for home theater developed by Sony. DCS uses the DSP (Digital Signal Processor) technology to reproduce the sound characteristics of an actual cinema cutting studio in Hollywood.
When played at home, DCS will create a powerful theater effect that mimics the artistic combination of sound and action as envisioned by the movie director.

■ C.ST.EX A (CINEMA STUDIO EX A) DCS

Reproduces the sound characteristics of the Sony Pictures Entertainment “Cary Grant Theater” cinema production studio. This is a standard mode, great for watching most any type of movies.

■ C.ST.EX B (CINEMA STUDIO EX B) DCS

Reproduces the sound characteristics of the Sony Pictures Entertainment “Kim Novak Theater” cinema production studio. This mode is ideal for watching science-fiction or action movies with lots of sound effects.

■ C.ST.EX C (CINEMA STUDIO EX C) DCS

Reproduces the sound characteristics of the Sony Pictures Entertainment scoring stage. This mode is ideal for watching musicals or films where orchestra music is featured in the soundtrack.

■ V.M.DIM (VIRTUAL MULTI DIMENSION) DCS

Creates 5 sets of virtual speakers from a single pair of actual surround speakers.

About CINEMA STUDIO EX modes

CINEMA STUDIO EX modes are suitable for watching motion picture DVDs (etc.), with multi channel surround effects. You can reproduce the sound characteristics of Sony Pictures Entertainment's dubbing studio in your home.

The CINEMA STUDIO EX modes consist of the following three elements.

- Virtual Multi Dimension
  Creates 5 sets of virtual speakers from a single pair of actual surround speakers.
- Screen Depth Matching
  Creates the sensation that the sound is coming from inside the screen like in theaters.
- Cinema Studio Reverberation
  Reproduces the type of reverberation found in theaters.

The CINEMA STUDIO EX modes integrate these three elements simultaneously.

Tip

You can identify the encoding format of DVD software, etc. by looking at the logo on the package.

– DOLBY DIGITAL : Dolby Digital discs
– DOLBY SURROUND PRO · LOGIC : Dolby Surround encoded programs
– DIGITAL dts SURROUND : DTS Digital Surround encoded programs

Notes

- The effects provided by the virtual speakers may cause increased noise in the playback signal.
- When listening with sound fields that employ the virtual speakers, you will not be able to hear any sound coming directly from the surround speakers.

Selecting a sound field for music

Press MUSIC repeatedly to select the sound field you want.

The selected sound field appears in the display.

Sound field	Display
HALL	HALL
JAZZ CLUB	JAZZ
LIVE CONCERT	CONCERT

■ HALL

Reproduces the acoustics of a classical concert hall.

■ JAZZ (JAZZ CLUB)

Reproduces the acoustics of a jazz club.
dance club.

■ CONCERT (LIVE CONCERT)

Reproduces the acoustics of a 300-seat live house.

When the headphones are connected

You can select only from the following sound fields.

■ HEADPHONE (2CH)

Outputs the sound in 2 channel (stereo). Standard 2 channel stereo sources completely bypass the sound field processing and multi channel surround formats are downmixed to 2 channels.

■ HEADPHONE THEATER DCS

Allows you to experience a theater-like environment while listening through a pair of headphones.

Note

If you connect a pair of headphones while a sound field is operating, the system will automatically switch to HEADPHONE (2CH) if using a sound field selected with the 2CH or A.F.D. button, or to HEADPHONE THEATER if using a sound field selected with the MOVIE or MUSIC button.

To turn off the surround effect

Press 2CH or A.F.D.

Note

Sound fields does not function for PCM 96 kHz signals.

Selecting the surround back decoding mode

— *SURR BACK DECODING*

This function lets you select the decoding mode for the surround back signals of the multi channel input stream.
By decoding the surround back signal of DVD software (etc.) recorded in Dolby Digital EX, DTS-ES Matrix, DTS-ES Discrete 6.1, etc. format, you can enjoy the surround sound intended by the filmmakers.

Press SURR BACK DECODING repeatedly to select the surround back decoding mode.

For details, see “How to select the surround back decoding mode” on page 35.

Tip

You can select the surround back decoding mode using “SB XXXX” in the CUSTOMIZE menu (page 39).

Note

You can select the surround back decoding mode only when A.F.D. mode is selected.

How to select the surround back decoding mode

You can select the surround back mode you want according to the input stream.

When you select "SB AUTO"

When the input stream contains the 6.1 channel decode flag[a], the appropriate decoder is applied to decode the surround back signal.

Input stream	Output channel	Applied surround back decoder
Dolby Digital 5.1	5.1[e]	—
Dolby Digital EX[b]	6.1[e]	Matrix decoder conforms to Dolby Digital EX
DTS 5.1	5.1[e]	—
DTS-ES Matrix 6.1[c]	6.1[e]	DTS Matrix decoder
DTS-ES Discrete 6.1[d]	6.1[e]	DTS Discrete decoder

When you select "SB MTRX"

Dolby Digital EX is applied to decode the surround back signal regardless of the 6.1 channel decode flag[a] in the input stream. This decoder conforms to Dolby Digital EX and functions the same as the decoders[f] used in movie theaters.

Input stream	Output channel	Applied surround back decoder
Dolby Digital 5.1	6.1[e]	Matrix decoder conforms to Dolby Digital EX
Dolby Digital EX[b]	6.1[e]	Matrix decoder conforms to Dolby Digital EX
DTS 5.1	6.1[e]	Matrix decoder conforms to Dolby Digital EX
DTS-ES Matrix 6.1[c]	6.1[e]	Matrix decoder conforms to Dolby Digital EX
DTS-ES Discrete 6.1[d]	6.1[e]	Matrix decoder conforms to Dolby Digital EX

When you select "SB OFF"

Surround back decoding is not performed.

[a] 6.1 channel decode flag is the information recorded in software like DVDs.

[b] Dolby Digital DVD that includes a Surround EX flag. The Dolby Corporation web page can help you distinguish Surround EX films.

[c] Software encoded with a flag to denote it has both Surround EX and 5.1 channel signals.

[d] Software encoded with both 5.1 channel signals and an extension stream designed for returning those signals to 6.1 discrete channels. Discrete 6.1 channel signals are DVD specific signals not used in movie theaters.

[e] When two surround back speakers are connected, the output channel will be 7.1 channels (STR-DA1000ES only).

[f] This decoder can be used for all 6.1 formats (Dolby Digital EX, DTS-ES Matrix 6.1, DTS-ES Discrete 6.1).

Note

There may be no sound from the surround back speaker in Dolby Digital EX mode. Some discs have no Dolby Digital EX flag even though the packages have Dolby Digital EX logos. In this case, select "SB MTRX".

Switching the audio input mode for digital components

— INPUT MODE

You can switch the audio input mode for components which have digital audio input jacks.

1 **Rotate INPUT SELECTOR to select the input.**

2 **Press INPUT MODE repeatedly to select the audio input mode.**

The selected audio input mode appears in the display.

Audio input modes

- AUTO IN
  Gives priority to the analog audio signals input to the AUDIO IN (L/R) jacks when there is no digital audio signals.
- COAX IN
  Specifies the digital audio signals input to the DIGITAL COAXIAL input jack.
- OPT IN
  Specifies the digital audio signals input to the DIGITAL OPTICAL input jacks.
- ANALOG
  Specifies the analog audio signals input to the AUDIO IN (L/R) jacks.

Customizing sound fields

By adjusting the LEVEL menu, you can customize the sound fields to suit your particular listening situation.

Note on the displayed items

The setup items you can adjust in each menu vary depending on the sound field. Certain setup parameters may be dimmed in the display. This means that the selected parameter is either unavailable or fixed and unchangeable.

Adjusting the LEVEL menu

You can adjust the balance and level of each speaker. These settings are applied to all sound fields.

1 **Start playing a source encoded with multi channel surround effects (DVD, etc.).**

2 **Press MAIN MENU repeatedly to select "LEVEL".**

3 **Rotate MENU to select the parameter.**

For details, see "LEVEL menu parameters" below.

4 **While monitoring the sound, rotate –/+ to adjust the selected parameter.**

5 **Repeat steps 3 and 4 to adjust the other parameters.**

LEVEL menu parameters

■ T.TONE (Test Tone)

Initial setting: OFF

Lets you output the test tone sequentially from each speaker. When set to "AUTO", the test tone is output from each speaker automatically. When set to "FIX", you can select which speaker will output the test tone.

■ BAL. XXXX (Front speaker balance)

Initial setting: 0 (BALANCE)

Lets you adjust the balance between front left and right speakers. You can adjust in the range of L (+1 to +16), 0, R (+1 to +16) in 33 steps.

■ **CTR XXX.X dB**
(Center speaker level)

■ **SUR.L. XXX.X dB**
(Surround speaker (L) level)

■ **SUR.R. XXX.X dB**
(Surround speaker (R) level)

■ **SB XXX.X dB**
(Surround back speaker level)*

■ **SBL XXX.X dB**
(Surround back (L) level)**

■ **SBR XXX.X dB**
(Surround back (R) level)**

■ **S.W. XXX dB**
(Sub woofer level)

Initial setting: 0 dB

You can adjust from –20 dB to +10 dB in 0.5 dB steps.

■ **MULTI CH IN SW. XXX dB**
(Multi channel sub woofer level)

Initial setting: 0 dB

Lets you increase the level of the MULTI CH IN sub woofer channel by +10 dB. This adjustment may be necessary when connecting a DVD player to the MULTI CH IN jacks. The sub woofer level from DVD players is 10 dB lower than Super Audio CD players.

* Only when the surround back speaker is set to "SINGLE" (STR-DA1000ES) or "YES" (STR-DB790) in the SP SETUP menu.

** Only when the surround back speaker is set to "DUAL" in the SP SETUP menu (STR-DA1000ES only).

■ **EFCT. XXX (Effect level)**

Initial setting: STD

Lets you adjust the size of the surround effect.

Note

When one of the following sound fields are selected, no sound is output from the sub woofer if all the speakers are set to "LARGE" in the SP SETUP menu. However, the sound will be output from the sub woofer if the digital input signal contains LFE (Low Frequency Effect) signals, or if the front, center, or surround speakers are set to "SMALL".

– HALL

– JAZZ CLUB

– LIVE CONCERT

For advanced LEVEL menu adjustments

Use the CUSTOMIZE menu and set "MENU" to "MENU EXP." to enable advanced adjustments.

For details on "MENU", see page 38. For details on how to set the items, see page 41.

Resetting sound fields to the initial settings

1 **Press I/⏻ to turn off the power.**

2 **While holding down MUSIC, press I/⏻.**

"S.F CLR." appears in the display and all sound fields are reset to the initial setting.

Adjusting the equalizer

You can adjust the tonal quality (bass, treble level) of each speaker using the EQ menu.

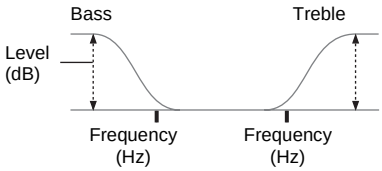

1 **Start playing a source encoded with multi channel surround effects (DVD, etc.).**

2 **Press MAIN MENU repeatedly to select "EQ".**

3 **Rotate MENU to select the parameter.**

For details, see "EQ menu parameters" below.

4 **While monitoring the sound, rotate –/+ to adjust the selected parameter.**

5 **Repeat steps 3 and 4 to adjust the other items.**

Note

You cannot adjust the equalizer when the system is decoding PCM 96 kHz signals, DTS 96/24 signals, or when DTS-ES Matrix decoding is applied.

EQ menu parameters

■ EQ

Initial setting: OFF

Select "ON" to activate the equalizer.

■ L R BASS XXX.X dB (Front speaker bass level)

■ L R TREB. XXX.X dB (Front speaker treble level)

Initial setting: 0 dB

You can adjust from –10 dB to +10 dB in 1 dB steps.

Advanced settings

Using the CUSTOMIZE menu to adjust the receiver

You can adjust various receiver settings using the CUSTOMIZE menu.

1 **Press MAIN MENU repeatedly to select "CUSTOM".**

2 **Rotate MENU to select the parameter.**

For details, see "CUSTOMIZE menu parameters" below.

3 **Rotate –/+ to adjust the selected parameter.**

4 **Repeat steps 2 and 3 to adjust the other items.**

CUSTOMIZE menu parameters

The initial setting is underlined.

■ MENU (Menu expanding)

- MENU EXP.
  The advanced parameters for the SP SETUP and LEVEL menus are displayed and can be adjusted.
  For details on each setup item, see pages 20, 36 and the following pages.
- MENU STD
  The advanced parameters are not displayed.

■ 96 XXXX DTS (DTS 96/24 decoding mode)

- 96 AUTO
  When a DTS 96/24 signal is input, it is played back at 96 kHz sampling frequencies.
- 96 OFF
  Even when a DTS 96/24 signal is input, it is played back at 48 kHz sampling frequencies.

Notes

- This parameter is valid only in the A.F.D. mode (page 31). In other sound fields, this parameter is always set to "96 OFF".
- DTS 96/24 decoding is only valid in the A.F.D. mode (page 31). When the system is set to other sound fields, standard 48 kHz decoding is used.
- Even when a DTS 96/24 signal is input, standard 48 kHz decoding is used if any speakers are set to "SMALL" or if the sub woofer is set to "NO".

■ SB XXXX
(Surround back decoding mode)

You can use the CUSTOMIZE menu to set the surround back decoding mode (page 34).

For details on each decoding mode, see page 35.

- SB AUTO
- SB MTRX
- SB OFF

Note

This parameter is valid only in the A.F.D. mode (page 31).

■ S.F XXXX (Sound field link)

- S.F LINK

  Lets you apply the last selected sound field to an input whenever it is selected. For example, if you select HALL for the CD/SACD input, then change to a different input and return to CD/SACD, HALL will automatically be applied again.
- S.F FIX

  Sound field link is not activated.

■ DEC. XXXX
(Digital audio input decoding priority)

Lets you specify the input mode for the digital signal input to the DIGITAL IN jacks.

The initial setting is “DEC. AUTO” for VIDEO 3 and TV/SAT, and “DEC. PCM” for DVD and MD/TAPE.

- DEC. AUTO

  Automatically switches the input mode between DTS, Dolby Digital, or PCM.
- DEC. PCM

  PCM signals are given priority (to prevent the interruption when playback starts). Even when other signals are input, the sound is output. When set to “DEC. AUTO” and the sound from the digital audio jacks (for CD, etc.) is interrupted when playback starts, set to “DEC. PCM”.

■ D.PWR. XXXX
(Digital power management)

- D.PWR. OFF

  Lets you turn off the power of the unnecessary digital circuits automatically when outputting the analog audio signals using the ANALOG DIRECT or MULTI CH IN function. You can enjoy high quality analog audio without the influence of digital circuits.When you select this mode, “D.PWR. ON” appears (8-9 seconds) on the display while the digital circuit is turning on.
- D.PWR. ON

  Lets you keep the power of digital circuits on. Select if you do not like the time lag that occurs with the “D.PWR. OFF” setting.

■ PWR.S. XXX
(CONTROL A1: Power link)

- PWR.S. ON

  The power link function is not activated, but you can decrease the power consumption of the receiver during standby mode.
- PWR.S. OFF

  Lets you turn on the system automatically when the component connected via CONTROL A1 cords (page 45) is turned on.

■ COAX-XXX
(Coaxial Input Assignment)

- DVD

  Lets you assign the COAXIAL input jack to DVD input.
- CD/SACD

  Lets you assign the COAXIAL input jack to CD/SACD input.

■ [DIMMER]

Lets you adjust the brightness of the display.

■ NAME IN
(Naming preset stations and inputs)

Lets you set the name of preset stations and inputs selected with INPUT SELECTOR. For details, see “Naming preset stations and inputs” on page 42.

Advanced SP SETUP menu parameters

When “MENU” is set to “MENU EXP.”, all of the following parameters are displayed and adjustable.

See page 20 for the SP SETUP menu adjustments. Initial settings are underlined.

continued

All SP SETUP menu parameters

XXXX SET
SP PAT. XXX
SW (SUB WOOFER)
L R (FRONT)
C (CENTER)
SL SR (SURROUND)
SB (SURR BACK)
L R DIST. X.X m (FRONT)*
C DIST. X.X m (CENTER)*
SL SR DIST. X.X m (SURROUND)*
SB DIST. X.X m (SURR BACK)*
DISTANCE**
PL. XXXX**
HGT. XXXX**
SP > XXX Hz**

* Default unit is “ft.” (feet) for STR-DA1000ES. Default unit is “m” (meter) for STR-DB790.

** Adjustable only when “MENU” is set to “MENU EXP.”.

■ DISTANCE (Distance unit)

Lets you select the unit of measure for setting distances.

- ft. (default for STR-DA1000ES)
  The distance is displayed in feet.
- m (default for models for STR-DB790)
  The distance is displayed in meters.

■ PL. XXXX (Surround speaker position)*

Lets you specify the location of your surround speakers for proper implementation of the surround effects in the Cinema Studio EX modes (page 32).

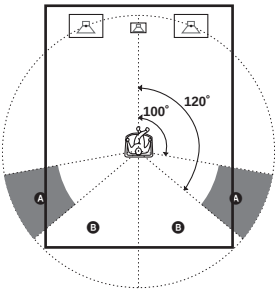

- SIDE
  Select if the location of your surround speakers corresponds to section A.
- BEHD
  Select if the location of your surround speakers corresponds to section B.

Tip

Surround speaker position is designed specifically for implementation of the Cinema Studio EX modes.

For other sound fields, speaker position is not so critical. Those sound fields were designed under the premise that the surround speakers would be located behind the listening position, but presentation remains fairly consistent even with the surround speakers positioned at a rather wide angle. However, if the speakers are pointing toward the listener from the immediate left and right of the listening position, the surround effects becomes unclear unless set to “SIDE”.

Nevertheless, each listening environment has many variables, like wall reflections, and you may obtain better results using “BEHD” if your speakers are located high above the listening position, even if they are to the immediate left and right.

Therefore, although it may result in a setting contrary to the above explanation, we recommend that you playback multi channel surround encoded software and select the setting that provides a good sense of spaciousness and that best succeeds in forming a cohesive space between the surround sound from the surround speakers and the sound of the front speakers. If you are not sure which sounds best, select “BEHD” and then use the speaker distance parameter and speaker level adjustments to obtain proper balance.

■ HGT. XXXX (Surround speaker height)*

Lets you specify the height of your surround speakers for proper implementation of the surround effects of the Cinema Studio EX modes (page 32).

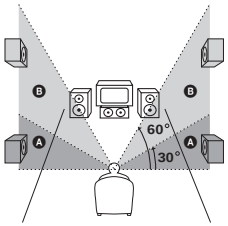

- LOW
  Select if the height of your surround speakers corresponds to section A.
- HIGH
  Select if the height of your surround speakers corresponds to section B.

* This setup item is not available when the surround speaker parameter is set to “NO”.

■ SP > XXX Hz (Speaker crossover frequency)

Initial setting: 100 Hz

Lets you set the bass crossover frequency of speakers set to “SMALL” in the SP SETUP menu. You can adjust the bass crossover frequency in three steps (60 Hz, 100 Hz and 150 Hz).

Advanced LEVEL menu parameters

When “MENU” is set to “MENU EXP.”, all of the following parameters are displayed and adjustable.
See page 36 for the LEVEL menu adjustments.
Initial settings are underlined.

All LEVEL menu parameters

T.TONE
P.NOISE*
P.AUDIO*
BAL. XXXX
CTR XXX.X dB
SUR.L. XXX.X dB
SUR.R. XXX.X dB
SB XXX.X dB
SBL XXX.X dB**
SBR XXX.X dB**
S.W. XXX dB
MULTI CH IN S.W. XXX dB
D.RANGE COMP.*
EFCT. XXX

* Adjustable only when “MENU” is set to “MENU EXP.”

** Adjustable only when surround back speaker is set to “DUAL” (page 21) (STR-DA1000ES only).

■ P.NOISE (Phase noise)

Initial setting: OFF

Lets you output the test tone sequentially from two adjacent speakers.

■ P.AUDIO (Phase audio)

Initial setting: OFF

Lets you output the front 2 channel source sound (instead of the test tone) sequentially from adjacent speakers.

■ D.RANGE COMP. (Dynamic range compressor)

Lets you compress the dynamic range of the sound track. This may be useful when you want to watch movies at low volumes late at night.

- OFF
  The dynamic range is not compressed.
- STD
  The dynamic range is compressed as intended by the recording engineer.
- MAX
  The dynamic range is compressed dramatically.

Tip

Dynamic range compressor lets you compress the dynamic range of the soundtrack based on the dynamic range information included in the Dolby Digital signal. We recommend using the “MAX” setting. This greatly compresses the dynamic range and lets you view movies late at night at low volumes. Unlike analog limiters, the levels are predetermined and provide a very natural compression.

Note

Dynamic range compression is possible with Dolby Digital sources only.

Naming preset stations and inputs

You can enter a name of up to 8 characters for preset stations and inputs selected with INPUT SELECTOR, and display it in the receiver's display.

To index a preset station

1. **Rotate INPUT SELECTOR to select FM or AM.**
2. **Tune in the preset station you want to create an index name for (page 26).**
3. **Press MAIN MENU repeatedly to select "TUNER".**
4. **Rotate MENU to select "NAME IN".**
5. **Press MEMORY/ENTER.**

   The cursor flashes and you can select a character. Follow the procedure of "To create an index name".

To index an input

1. **Rotate INPUT SELECTOR to select an input you want to create an index name for.**
2. **Press MAIN MENU repeatedly to select "CUSTOM".**
3. **Rotate MENU to select "NAME IN".**
4. **Press MEMORY/ENTER.**

   The cursor flashes and you can select a character. Follow the procedure of "To create an index name".

To create an index name

1. **Use MENU and –/+ to create an index name.**

   Rotate –/+ to select a character, then rotate MENU to move the cursor to the next position.

   Tips

   - You can select the character type as follows by rotating –/+.
     Alphabet (upper case) → Numbers → Symbols
   - To enter a blank space, rotate –/+ until a blank space appears in the display.
   - If you made a mistake, rotate MENU until the character you want to change flashes, then rotate –/+ to select the correct character.

2. **Press MEMORY/ENTER.**

   The entered name is registered.

Note (Models of area code CEL, CEK only)

When you name an RDS station and tune in the station, the Program Service (PS) name appears instead of the name you entered. (You cannot change the name of a Program Service (PS) name. The name you entered will be overwritten by the Program Service (PS) name.)

Using the Sleep Timer

You can set the receiver to turn off automatically at a specified time by using the remote.
For details, refer to the operating instructions supplied with the remote.

Press ALT, then press SLEEP on the remote while the power is on.

Each time you press SLEEP, the display changes cyclically as follows:
2:00:00 → 1:30:00 → 1:00:00 → 0:30:00 → OFF
While using Sleep Timer, "SLEEP" lights up in the display.

Tip

To check the remaining time before the receiver turns off, press ALT, then press SLEEP on the remote. The remaining time appears in the display.

Selecting the speaker system

You can select the front speaker system you want to use.

Press SPEAKERS repeatedly to select the front speaker system you want to use.

The selected speaker system appears in the display. To turn off the speaker output, press SPEAKERS repeatedly until SP A and SP B indication turn off.

The speaker system

- SP A
  The speakers connected to the FRONT SPEAKERS A terminals.
- SP B
  The speakers connected to the FRONT SPEAKERS B terminals.
- SP A SP B
  The speakers connected to both the FRONT SPEAKERS A and B terminals (parallel connection). In this case, be sure to connect front speakers with a nominal impedance of 8 ohms or higher, and set the IMPEDANCE SELECTOR to "4Ω".

Recording

Before you begin, make sure you've connected all components properly.

Recording on an audio tape or MiniDisc

You can record on a MiniDisc or cassette tape using the receiver. See the operating instructions of your cassette deck or MD deck if you need help.

1 Select the component to be recorded.

2 Prepare the component for playing.

For example, insert a CD into the CD player.

3 Insert a blank tape or MD into the recording deck and adjust the recording level, if necessary.

4 Start recording on the recording deck, then start playback on the playback component.

Notes

- You cannot record a digital audio signal using a component connected to the analog MD/TAPE OUT jacks. To record a digital audio signal, connect a digital component to the DIGITAL OPTICAL MD OUT jacks.
- Sound adjustments do not affect the signal output from the MD/TAPE OUT jacks.
- The analog audio signals of the current input is output from the MD/TAPE OUT jacks.
- The signals input to the MULTI CH IN jacks are not output from the MD/TAPE OUT jacks even when MULTI CH IN is being used. The analog audio signals of the current or previously used input are output.
- No signals are output from DIGITAL OPTICAL MD OUT jacks when ANALOG DIRECT is being used. The digital circuitry power is cut off to ensure superior sound quality when "D.PWR." is set to "D.PWR. OFF".

Recording on a video tape

You can record from a VCR or a TV using the receiver. You can also add audio from a variety of audio sources when editing a video tape. See the operating instructions of your VCR if you need help.

1 Select the program source to be recorded.

2 Prepare the component for playing.

For example, insert a video tape you want to record into VCR.

3 Insert a blank video tape into the VCR (VIDEO 1 or VIDEO 2) for recording.

4 Start recording on the recording VCR, then start playing the video tape or laser disc you want to record.

Tip

You can record the sound from any audio source onto a video tape while copying from a video tape. Locate the point where you want to start recording from another audio source, select the program source, then start playback. The audio from that source will be recorded onto the audio track of the video tape instead of the audio from the original medium. To resume audio recording from the original medium, select the video source again.

Notes

- You cannot record a digital audio signal using a component connected to the analog VIDEO 1 OUT or VIDEO 2 OUT jacks.
- Make sure to make both digital and analog connections to the TV/SAT and DVD inputs. Analog recording is not possible if you make only digital connections.
- Some sources contain copy guards to prevent recording. In this case, you may not be able to record from the sources.
- The analog audio signals of the current input are output from the VIDEO 1 OUT or VIDEO 2 OUT jacks.
- The signals input to the MULTI CH IN jacks are not output from VIDEO 1 OUT or VIDEO 2 OUT jacks even when MULTI CH IN is being used. The analog audio signals of the current or previously used input are output.

CONTROL A1II Control System

The CONTROL A1**II** Control System was designed to simplify the operation of audio systems composed of separate Sony components. CONTROL A1**II** connections provide a path for the transmission of control signals which enable automatic operation and control features usually associated with integrated systems.
Currently, CONTROL A1**II** connections between a Sony CD player, amplifier (receiver), MD deck and cassette deck provide automatic function selection.

Note

Do not operate a 2 way remote control unit when the CONTROL A1**II** jacks are connected via a PC interface kit to a personal computer running "MD Editor" or similar application. Also, do not operate the connected component in a manner contrary to the functions of the application, as this may cause the application to operate incorrectly.

CONTROL A1II and CONTROL A1 compatibility

The CONTROL A1 control system has been updated to the CONTROL A1**II** which is the standard system in the Sony 300 disc CD changer and other recent Sony components. Components with CONTROL A1 jacks are compatible with components with CONTROL A1**II**, and can be connected to each other. Basically, the majority of the functions available with the CONTROL A1 control system will be available with the CONTROL A1**II** control system.
However, when making connections between components with CONTROL A1 jacks and components with CONTROL A1**II** jacks, the number of functions that can be controlled may be limited depending on the component. For detailed information, refer to the operating instructions supplied with the component(s).

If you have a Sony CD changer with a COMMAND MODE selector

If your CD changer's COMMAND MODE selector can be set to CD 1, CD 2, or CD 3, be sure to set the command mode to "CD 1" and connect the changer to the CD jacks on the amplifier (receiver).
If, however, you have a Sony CD changer with VIDEO OUT jacks, set the command mode to "CD 2" and connect the changer to the VIDEO 2 jacks on the amplifier (receiver).

Connections

You can connect up to 10 CONTROL A1**II** compatible components in any order. However, you can connect only one of each type of component (i.e., 1 CD player, 1 MD deck, 1 tape deck and 1 receiver).
(You may be able to connect more than one CD player or MD deck, depending on the model. Refer to the operating instructions supplied with the respective component for details.)

Example

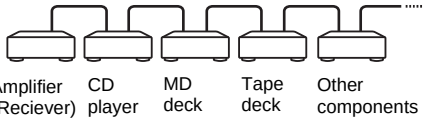

In the CONTROL A1**II** control system, the control signals flow both ways, so there is no distinction of IN and OUT jacks. If a component has more than one CONTROL A1**II** jack, you can use either one, or connect different components to each jack.
Some CONTROL A1 compatible components are supplied with a connecting cord as an accessory. In this case, use the connecting cord for your connection.
When using a commercially available cord, use a monaural (2P) mini-plug cord less than 2 meters long, with no resistance.

Basic Functions

The input selector on the receiver automatically switches to the correct input when you press the play button on one of the connected components (Auto input selection).
The CONTROL A1**II** functions will operate as long as the component you want to operate is turned on, even if all of the other connected components are not turned on.

Note

When recording, do not play any components other than the recording source. It will cause the automatic input selection to operate.

Precautions

On safety

Should any solid object or liquid fall into the cabinet, unplug the receiver and have it checked by qualified personnel before operating it any further.

On power sources

- Before operating the unit, check that the operating voltage is identical with your local power supply. The operating voltage is indicated on the nameplate at the rear of the receiver.
- The unit is not disconnected from the AC power source (mains) as long as it is connected to the wall outlet, even if the unit itself has been turned off.
- If you are not going to use the receiver for a long time, be sure to disconnect the receiver from the wall outlet. To disconnect the AC power cord, grasp the plug itself; never pull the cord.
- (Models of area code U, CA only)
  One blade of the plug is wider than the other for the purpose of safety and will fit into the wall outlet only one way. If you are unable to insert the plug fully into the outlet, contact your dealer.
- AC power cord must be changed only at the qualified service shop.

On heat buildup

Although the unit heats up during operation, this is not a malfunction. If you continuously use this unit at a large volume, the cabinet temperature of the top, side and bottom rises considerably. To avoid burning yourself, do not touch the cabinet.

On placement

- Place the receiver in a location with adequate ventilation to prevent heat buildup and prolong the life of the receiver.
- Do not place the receiver near heat sources, or in a place subject to direct sunlight, excessive dust or mechanical shock.
- Do not place anything on top of the cabinet that might block the ventilation holes and cause malfunctions.

On operation

Before connecting other components, be sure to turn off and unplug the receiver.

On cleaning

Clean the cabinet, panel and controls with a soft cloth slightly moistened with a mild detergent solution. Do not use any type of abrasive pad, scouring powder or solvent such as alcohol or benzine.

If you have any question or problem concerning your receiver, please consult your nearest Sony dealer.

Troubleshooting

If you experience any of the following difficulties while using the receiver, use this troubleshooting guide to help you remedy the problem. Should any problem persist, consult your nearest Sony dealer.

There is no sound no matter which component is selected.

- Check that both the receiver and all components are turned on.
- Check that the MASTER VOLUME –/+ control is not set at –∞ dB.
- Check that the SPEAKERS is not set to off (page 43).
- Check that all speaker cords are connected correctly.
- Press MUTING on the remote to cancel the muting function.

There is no sound from a specific component.

- Check that the component is connected correctly to the audio input jacks for that component.
- Check that the cord(s) used for the connection is (are) fully inserted into the jacks on both the receiver and the component.

There is no sound from one of the front speakers.

- Connect a pair of headphones to the PHONES jack to verify that sound is output from the headphones. If only one channel is output from the headphones, the component may not be connected to the receiver correctly. Check that all the cords are fully inserted into the jacks on both the receiver and the component. If both channels are output from the headphones, the front speaker may not be connected to the receiver correctly. Check the connection of the front speaker which is not outputting any sound.

There is no sound or only a very low-level sound is heard.

- Check that the speakers and components are connected securely.
- Check that you have selected the correct component on the receiver.
- Check that the SPEAKERS is not set to off (page 43).
- Check that the headphones are not connected.
- Press MUTING on the remote to cancel the muting function.
- The protective device on the receiver has been activated because of a short circuit. Turn off the receiver, eliminate the short-circuit problem and turn on the power again.

There is no sound from analog 2 channel sources.

- Check that the INPUT MODE is not set to “COAX IN” nor “OPT IN” (page 36).
- Check that the MULTI CH IN function is selected.

There is no sound from digital sources (from COAXIAL or OPTICAL input jack).

- Check that the INPUT MODE is not set to “ANALOG” (page 36). Check that the INPUT MODE is not set to “COAX IN” for the sources from OPTICAL input jack, nor set to “OPT IN” for the sources from COAXIAL input jack.
- Check that the MULTI CH IN function is selected.

The left and right sounds are unbalanced or reversed.

- Check that the speakers and components are connected correctly and securely.
- Adjust balance parameters in the LEVEL menu.

There is severe hum or noise.

- Check that the speakers and components are connected securely.
- Check that the connecting cords are away from a transformer or motor, and at least 3 meters away from a TV set or fluorescent light.
- Move your TV away from the audio components.
- Make sure you have grounded ⏚ SIGNAL GND terminal (only when a turntable is connected).
- The plugs and jacks are dirty. Wipe them with a cloth slightly moistened with alcohol.

There is no sound from the center speaker.

- Make sure the sound field function is on (press A.F.D., MOVIE or MUSIC).
- Select the CINEMA STUDIO EX mode (page 32).
- Adjust the speaker level (page 23).
- Make sure the center speaker is set to either “SMALL” or “LARGE” (page 20).

There is no sound from the surround back speakers.

- Some discs have no Dolby Digital EX flag even though the packages have Dolby Digital EX logos. In this case, select “SB MTRX” (page 39).

There is no sound or only a very low-level sound is heard from the surround/surround back speakers.

- Make sure the sound field function is on (press A.F.D., MOVIE or MUSIC).
- Select a CINEMA STUDIO EX mode (page 32).

continued

- Adjust the speaker level (page 23).
- Make sure the surround speakers are set to either “SMALL” or “LARGE” (page 21).
- Make sure the surround back speaker is set to either “DUAL” or “SINGLE” (STR-DA1000ES), or “YES” (STR-DB790) (page 21).

The surround effect cannot be obtained.

- Make sure the sound field function is on (press A.F.D., MOVIE or MUSIC).
- Sound fields do not function for the signals with a sampling frequency of more than 48 kHz.

Dolby Digital or DTS multi channel sound is not reproduced.

- Check that the playing DVD, etc. is recorded in **Dolby Digital** or DTS format.
- When connecting the DVD player, etc. to the digital input jacks of this receiver, check the audio setting (settings for the audio output) of the connected component.

Recording cannot be done.

- Check that the components are connected correctly.
- Select the source component with INPUT SELECTOR.

The FM reception is poor.

- Use a 75-ohm coaxial cable (not supplied) to connect the receiver to an outdoor FM antenna as shown below. If you connect the receiver to an outdoor antenna, ground it against lightning. To prevent a gas explosion, do not connect the ground wire to a gas pipe.

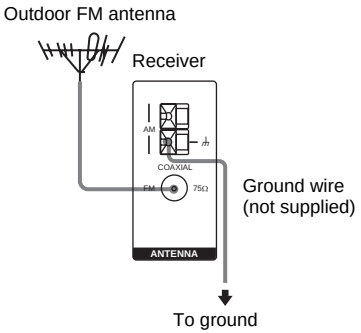

Radio stations cannot be tuned in.

- Check that the antennas are connected securely. Adjust the antennas and connect an external antenna if necessary.
- The signal strength of the stations is too weak (when tuning in with automatic tuning). Use direct tuning.
- Make sure you set the tuning interval correctly (when tuning in AM stations with direct tuning).
- No stations have been preset or the preset stations have been cleared (when tuning by scanning preset stations). Preset the stations (page 26).
- Press DISPLAY so that the frequency appears in the display.

RDS does not work.*

- Make sure that you’re tuned to an FM RDS station.
- Select a stronger FM station.

The RDS information that you want does not appear.*

- Contact the radio station and find out whether or not they actually provide the service in question. If so, the service may be temporarily out of order.

There is no picture or an unclear picture appears on the TV screen or monitor.

- Select the appropriate input on the receiver.
- Set your TV to the appropriate input mode.
- Move your TV away from the audio components.

Remote control

The remote does not function.

- Point the remote at the remote sensor ▣ on the receiver.
- Remove any obstacles in the path between the remote and the receiver.
- Replace all the batteries in the remote with new ones, if they are weak.
- Check if the command modes of the receiver and the remote is the same. If the command mode of the receiver and the remote is different, you cannot operate the receiver with the remote. To switch the command mode of the remote, press I/⏻ while pressing INPUT MODE. Each time you press I/⏻, the command mode switches between “C.MODE. AV2” and “C.MODE. AV1”. (The initial setting is “C.MODE. AV2”.)
- Make sure you select the correct input on the remote.

* Models of area code CEL, CEK only.

Error messages

If there is a malfunction, the display shows a code of two numbers and a message. You can check the condition of the system by the message. Refer to the following table to solve

the problem. If any problem persists, consult your nearest Sony dealer.

DEC. EROR

Appears when the signal which the receiver cannot decode (ex. DTS-CD) is input when "DEC." is set to "DEC. PCM". Set to "DEC. AUTO".

PROTECT

Irregular current is output from the speakers. Turn off the receiver, check the speaker connection and turn on the power again. If this problem persists, turn off the receiver and consult your nearest Sony dealer.

Reference sections for clearing the memory

To clear	See
All memorized settings	page 19
Customized sound fields	page 37

Specifications

AUDIO POWER SPECIFICATIONS

POWER OUTPUT AND TOTAL HARMONIC DISTORTION: (Models of area code U only)

With 8 ohm loads, both channels driven, from 20 – 20,000 Hz; rated 100 watts per channel minimum RMS power, with no more than 0.09% total harmonic distortion from 250 milliwatts to rated output.

Amplifier section

POWER OUTPUT
STR-DA1000ES:
Rated Power Output at Stereo Mode
(8 ohms 20 Hz – 20 kHz, THD 0.09%) 100 W + 100 W
(4 ohms 20 Hz – 20 kHz, THD 0.09%) 80 W + 80 W
Reference Power Output
(8 ohms 20 Hz – 20 kHz, THD 0.09%)
FRONT[1]: 100 W + 100 W
CENTER[1]: 100 W
SURR[1]: 100 W + 100 W
SURR BACK[1]: 100 W
(4 ohms 20 Hz – 20 kHz, THD 0.09%)
FRONT[1]: 80 W + 80 W
CENTER[1]: 80 W
SURR[1]: 80 W + 80 W
SURR BACK[1]: 80 W

STR-DB790:
Rated Power Output at Stereo Mode
(8 ohms 1 kHz, THD 0.7%) 90 W + 90 W[3]
(4 ohms 1 kHz, THD 0.7%) 80 W + 80 W[3]
Reference Power Output[2]
(8 ohms 1 kHz, THD 0.7%)
FRONT[1]: 100 W + 100 W
CENTER[1]: 100 W
SURR[1]: 100 W + 100 W
SURR BACK[1]: 100 W
(4 ohms 1 kHz, THD 0.7%)
FRONT[1]: 90 W + 90 W
CENTER[1]: 90 W
SURR[1]: 90 W + 90 W
SURR BACK[1]: 90 W
(8 ohms 20 Hz – 20 kHz, THD 0.09%)
FRONT[1]: 90 W + 90 W
CENTER[1]: 90 W
SURR[1]: 90 W + 90 W
SURR BACK[1]: 90 W
(4 ohms 20 Hz – 20 kHz, THD 0.09%)
FRONT[1]: 80 W + 80 W
CENTER[1]: 80 W

continued

SURR[1]: 80 W + 80 W
SURR BACK[1]: 80 W

1) Depending on the sound field settings and the source, there may be no sound output.

2) Measured under the following conditions:

Area code	Power requirements
SP, CEL, CEK	230 V AC, 50 Hz
TW	110 V AC, 60 Hz

3) Measured under the following conditions:

Area code	Power requirements
KR	220 V AC, 50 Hz

Frequency response

PHONO	RIAA equalization curve ±0.5 dB
MULTI CH IN, CD/ SACD, MD/TAPE, DVD, TV/SAT, VIDEO 1, 2, 3	10 Hz – 100 kHz +0.5/–2 dB (when ANALOG DIRECT is selected)

Inputs (Analog)

PHONO	Sensitivity: 2.5 mV Impedance: 50 kilohms S/N[3]: 86 dB (A, 2.5 mV[4])
MULTI CH IN, CD/ SACD, MD/TAPE, DVD, TV/SAT, VIDEO 1, 2, 3	Sensitivity: 150 mV Impedance: 50 kilohms S/N[4]: 96 dB (A, 150 mV[5])

4) INPUT SHORT.

5) Weighted network, input level.

Inputs (Digital)

DVD (Coaxial)	Impedance: 75 ohms S/N: 100 dB (A, 20 kHz LPF)
DVD, TV/SAT, MD, VIDEO3 (Optical)	S/N: 100 dB (A, 20 kHz LPF)

Outputs

MD/TAPE (REC OUT), VIDEO 1, 2 (AUDIO OUT)	Voltage: 150 mV Impedance: 2.2 kilohms
FRONT L/R, CENTER, SURR L/R, SURR BACK (L/R), SUB WOOFER	Voltage: 2 V Impedance: 1 kilohms

EQ

Gain levels	±10 dB, 1 dB step

FM tuner section

Tuning range	87.5 - 108.0 MHz
Antenna	FM wire antenna
Antenna terminals	75 ohms, unbalanced
Sensitivity	
Mono:	18.3 dBf, 2.2 µV/75 ohms
Stereo:	38.3 dBf, 22.5 µV/75 ohms
Useable sensitivity	11.2 dBf, 1 µV/75 ohms
S/N	
Mono:	76 dB
Stereo:	70 dB
Harmonic distortion at 1 kHz	
Mono:	0.3%
Stereo:	0.5%
Separation	45 dB at 1 kHz
Frequency response	30 Hz – 15 kHz, +0.5/–2 dB
Selectivity	60 dB at 400 kHz

AM tuner section

Tuning range	
STR-DA1000ES:	530 – 1,710 kHz[6] (With 10-kHz tuning scale) 531 – 1,710 kHz[6] (With 9-kHz tuning scale)
STR-DB790:	531 – 1,602 kHz (With 9-kHz tuning scale)
Antenna	Loop antenna
Usable sensitivity	50 dB/m (at 1,000 kHz or 999 kHz)
S/N	54 dB (at 50 mV/m)
Harmonic distortion	0.5% (50 mV/m, 400 Hz)
Selectivity	
At 9 kHz:	35 dB
At 10 kHz:	40 dB

6) You can change the AM tuning scale to 9 kHz or 10 kHz. After tuning in any AM station, turn off the receiver. While holding down PRESET TUNING + or TUNING +, press I/⏻. All preset stations will be erased when you change the tuning scale. To reset the scale to 10 kHz (or 9 kHz), repeat the procedure.

Video section

Inputs/Outputs	
Video:	1 Vp-p, 75 ohms
S-video:	Y: 1 Vp-p, 75 ohms C: 0.286 Vp-p, 75 ohms
COMPONENT VIDEO:	Y: 1 Vp-p, 75 ohms B-Y: 0.7 Vp-p, 75 ohms R-Y: 0.7 Vp-p, 75 ohms

General

Power requirements

Area code	Power requirements
U, CA	120 V AC, 60 Hz
CEL, CEK	230 V AC, 50/60 Hz
SP, KR	220 – 230 V AC, 50/60 Hz
TW	110 V AC, 60 Hz

Power consumption

Area code	Power consumption
U	280 W
CA	330 VA
CEL, CEK	290 W
SP, KR	290 W
TW	290 W (MAX 500 W)

Power consumption (during standby mode)
1 W

AC outlets

Area code	AC outlets
U, CA	1 switched, 120 W/1A MAX
CEL, CEK, SP, TW	1 switched, 100 W MAX

Dimensions 430 × 161 × 400 mm including projecting parts and controls

Mass (Approx.) 14.5 kg

Supplied accessories

FM wire antenna (1)
AM loop antenna (1)
STR-DA1000ES:
Remote commander RM-LG112 (1)
R6 (size-AA) batteries (2)
STR-DB790:
Remote commander RM-PP412 (1)
R6 (size-AA) batteries (2)

For details on the area code of the component you are using, see page 3.

Design and specifications are subject to change without notice.

List of button locations and reference pages

How to use this page

Use this page to find the location of buttons and other parts of the system that are mentioned in the text.

Illustration number

DISPLAY 7 (29)

Name of button/part — Reference page

Main unit

ALPHABETICAL ORDER

A.F.D. 13 (31, 32, 33, 38)
DISPLAY 7 (29)
Display 5 (30)
INPUT MODE 8 (36)
INPUT SELECTOR 10 (24, 25, 26, 31, 36, 39, 42)
IR receptor 1
MAIN MENU 3 (20, 36, 38, 42)
MASTER VOLUME –/+ 9 (23, 24)
MEMORY/ENTER 4 (20, 26, 42)
MENU 20 (20, 22, 36, 38, 42)
MOVIE 12 (32, 33)
MULTI CHANNEL DECODING indicator 6
MUSIC 11 (33, 37)
PHONES jack 21
PRESET TUNING –/+ 17 (26)
SPEAKERS 22 (43)
SURR BACK DECODING 15 (34)
TUNING –/+ 16 (25, 50)
VIDEO 3 INPUT jacks 19 (14)

NUMBERS AND SYMBOLS

2CH 14 (31, 33)
–/+ 18 (20, 36, 38, 42)
I/⏻ (power) 2

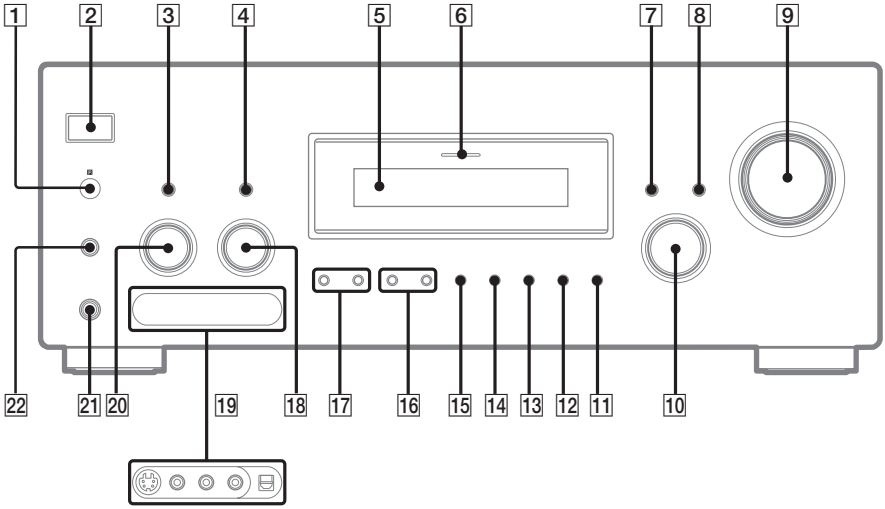

To remove the cover

Press PUSH to remove the cover. When you remove the cover, keep the cover out of reach of the children.

Index

A

Adjusting
- CUSTOMIZE parameters 38
- EQ parameter 38
- LEVEL parameter 36, 41
- SP SETUP parameters 20, 39
- speaker volume 23

Automatic tuning 25

C

Changing
- display 29

Clearing receiver's memory 19
Crossover frequency 41
CUSTOMIZE menu 38

D

Digital Cinema Sound 32
Direct tuning 25
Dubbing. *See* Recording

E

Editing. *See* Recording
EQ menu 38

I

Indexing. *See* Naming

L

Labeling. *See* Naming
LEVEL menu 36, 41

N

Naming 42

P

Preset stations
- how to 26
- how to tune 26

R

RDS 27
Recording
- on a video tape 44
- on an audio tape or MD 44

S

Selecting
- component 24
- front speaker system 43
- sound field 32–33

Sleep Timer 43
Sound field
- customizing 36
- pre-programmed 32–33
- resetting 37
- selecting 32–33

SP SETUP menu 20, 39
Speakers
- adjusting speaker volume 23
- connection 16
- impedance 16
- placement 16

Supplied accessories 51

T

Test tone 23
Tuning
- automatically 25
- directly 25
- preset stations 26

Sony Corporation Printed in Malaysia http://www.sony.net/