CDX-GT50W/GT500/ GT500EE/GT550

SERVICE MANUAL

Ver. 1.0 2005. 12

US Model
CDX-GT50W/GT500
Canadian Model
AEP Model
UK Model
CDX-GT500
E Model
CDX-GT550
East European Model
CDX-GT500EE
Chinese Model
CDX-GT550

Photo: CDX-GT500

• The tuner and CD sections have no adjustments.

Model Name Using Similar Mechanism	CDX-A250/A250EE
CD Drive Mechanism Type	MG-611WA-186//Q
Optical Pick-up Name	KSS1000E

AUDIO POWER SPECIFICATIONS (US Model)
POWER OUTPUT AND TOTAL HARMONIC DISTORTION
23.2 watts per channel minimum continuous average power into 4 ohms, 4 channels driven from 20 Hz to 20 kHz with no more than 5% total harmonic distortion.

SPECIFICATIONS

CD player section

Signal-to-noise ratio: 120 dB
Frequency response: 10 – 20,000 Hz
Wow and flutter: Below measurable limit

Tuner section

FM

Tuning range: CDX-GT50W/GT500: US Canadian model
87.5 – 107.9 MHz
CDX-GT500: AEP, UK model
87.5 – 108.0 MHz
CDX-GT500EE:
FM1/FM2: 87.5 – 108.0 MHz (at 50 kHz step)
FM3: 65 – 74 MHz (at 30 kHz step)
CDX-GT550:
87.5 – 108.0 MHz (at 50 kHz step)
87.5 – 107.9 MHz (at 200 kHz step)
FM tuning interval (CDX-GT550 only):
50 kHz/200 kHz switchable
Antenna terminal: External antenna connector
Intermediate frequency: 10.7 MHz/450 kHz
Usable sensitivity: 9 dBf
Selectivity: 75 dB at 400 kHz
Signal-to-noise ratio: 67 dB (stereo), 69 dB (mono)
Harmonic distortion at 1 kHz:
0.5 % (stereo), 0.3 % (mono)
Separation: 35 dB at 1 kHz
Frequency response: 30 – 15,000 Hz

AM (CDX-GT50W/GT500: US, Canadian model/GT500EE/GT550)

Tuning range: CDX-GT50W/GT500: US, Canadian model:
530 – 1,710 kHz
CDX-GT500EE:
531 – 1,602 kHz
CDX-GT550:
531 – 1,602 kHz (at 9 kHz step)
530 – 1,710 kHz (at 10 kHz step)
AM tuning interval (CDX-GT550 only):
9 kHz/10 kHz switchable
Antenna terminal: External antenna connector
Intermediate frequency: 10.7 MHz/450 kHz
Sensitivity: 30 µV

MW/LW (CDX-GT500: AEP, UK model)

Tuning range: MW: 531 – 1,602 kHz
LW: 153 – 279 kHz
Aerial terminal: External aerial connector
Intermediate frequency: 10.7 MHz/450 kHz
Sensitivity: MW: 30 µV, LW: 40 µV

– Continued on next page –

FM/AM COMPACT DISC PLAYER

CDX-GT50W/GT500: US, Canadian MODEL/GT500EE/GT550

FM/MW/LW COMPACT DISC PLAYER

CDX-GT500: AEP, UK MODEL

9-887-003-01 **Sony Corporation**
2005L04-1 **eVehicle Division**
© 2005. 12
Published by Sony Engineering Corporation

SONY®

Power amplifier section

Outputs:	Speaker outputs (sure seal connectors)
Speaker impedance:	4 – 8 ohms
Maximum power output:	52 W × 4 (at 4 ohms)

General

Outputs:	Audio outputs terminal (front/rear) Subwoofer output terminal (mono) Power antenna relay control terminal Power amplifier control terminal
Inputs:	Telephone ATT control terminal Illumination control terminal BUS control input terminal BUS audio input/AUX IN terminal Remote controller input terminal Antenna input terminal
Tone controls:	Low: ±10 dB at 60 Hz or 100 Hz (XPLOD) Mid: ±10 dB at 500 Hz or 1 kHz (XPLOD) High: ±10 dB at 10 kHz or 12.5 kHz (XPLOD)
Power requirements:	12 V DC car battery (negative ground)
Dimensions:	Approx. 178 × 50 × 181 mm (7 1/8 × 2 × 7 1/4 in) (w/h/d)
Mounting dimensions:	Approx. 182 × 53 × 162 mm (7 1/4 × 2 1/8 × 6 1/2 in) (w/h/d)
Mass:	Approx. 1.2 kg (2 lb 11 oz)
Supplied accessories:	Parts for installation and connections (1 set) Card remote commander: RM-X151

Design and specifications are subject to change without notice.

SERVICE NOTES

CAUTION

Use of controls or adjustments or performance of procedures other than those specified herein may result in hazardous radiation exposure.

(GT500: AEP/UK/GT500EE/GT550)
This compact disc player is classified as a CLASS 1 LASER product. The CLASS 1 LASER PRODUCT label is located on the exterior.

Except Chinese model

CLASS 1
LASER PRODUCT

This label is located on the bottom of the chassis.

Chinese model

1类激光产品

此标签位于机壳的底部。

SAFETY-RELATED COMPONENT WARNING!!

COMPONENTS IDENTIFIED BY MARK ⚠ OR DOTTED LINE WITH MARK ⚠ ON THE SCHEMATIC DIAGRAMS AND IN THE PARTS LIST ARE CRITICAL TO SAFE OPERATION. REPLACE THESE COMPONENTS WITH SONY PARTS WHOSE PART NUMBERS APPEAR AS SHOWN IN THIS MANUAL OR IN SUPPLEMENTS PUBLISHED BY SONY.

NOTES ON HANDLING THE OPTICAL PICK-UP BLOCK OR BASE UNIT

The laser diode in the optical pick-up block may suffer electrostatic breakdown because of the potential difference generated by the charged electrostatic load, etc. on clothing and the human body.
During repair, pay attention to electrostatic breakdown and also use the procedure in the printed matter which is included in the repair parts.
The flexible board is easily damaged and should be handled with care.

NOTES ON LASER DIODE EMISSION CHECK

The laser beam on this model is concentrated so as to be focused on the disc reflective surface by the objective lens in the optical pick-up block. Therefore, when checking the laser diode emission, observe from more than 30 cm away from the objective lens.

Notes on Chip Component Replacement

- Never reuse a disconnected chip component.
- Notice that the minus side of a tantalum capacitor may be damaged by heat.

If the optical pick-up block is defective, please replace the whole optical pick-up block.
Never turn the semi-fixed resistor located at the side of optical pick-up block.

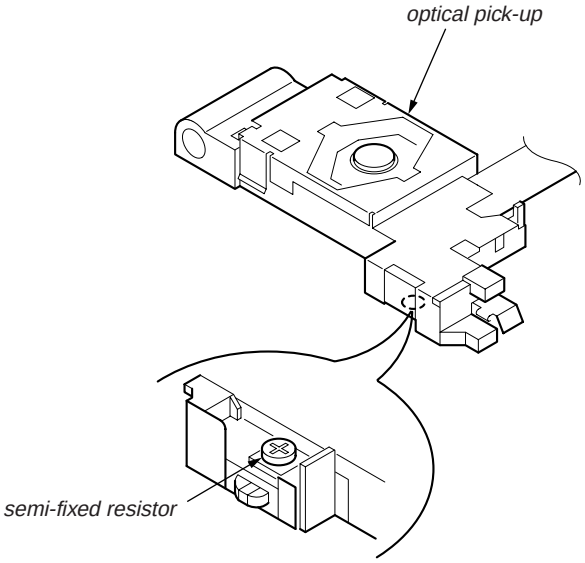

TEST DISCS

This set can playback CD-R and CD-ROM discs. The following test discs should be used to check the capability:

CD-R test disc TCD-R082LMT (Part No. J-2502-063-1)
CD-RW test disc TCD-W082L (Part No. J-2502-063-2)

ATTENTION AU COMPOSANT AYANT RAPPORT À LA SÉCURITÉ!!

LES COMPOSANTS IDENTIFIÉS PAR UNE MARQUE ⚠ SUR LES DIAGRAMMES SCHÉMATIQUES ET LA LISTE DES PIÈCES SONT CRITIQUES POUR LA SÉCURITÉ DE FONCTIONNEMENT. NE REMPLACER CES COMPOSANTS QUE PAR DES PIÈCES SONY DONT LES NUMÉROS SONT DONNÉS DANS CE MANUEL OU DANS LES SUPPLÉMENTS PUBLIÉS PAR SONY.

- **CD playback**
  You can play CD-DA (also containing CD TEXT*), CD-R/CD-RW (MP3/WMA files also containing Multi Session and ATRAC CD (ATRAC3 and ATRAC3plus format).

Type of discs	Label on the disc
CD-DA	COMPACT disc DIGITAL AUDIO Recordable / COMPACT disc DIGITAL AUDIO ReWritable
MP3 WMA ATRAC CD	COMPACT disc DIGITAL AUDIO Recordable / COMPACT disc DIGITAL AUDIO ReWritable COMPACT disc Recordable / COMPACT disc ReWritable

* A CD TEXT disc is a CD-DA that includes information such as disc, artist and track name.

EXTENSION CABLE AND SERVICE POSITION

When repairing or servicing this set, connect the jig (extension cable) as shown below.

- Connect the MAIN board (CN400) and the SERVO board (CN2) with the extension cable (Part No. J-2502-076-1).

● UNLEADED SOLDER

Boards requiring use of unleaded solder are printed with the lead free mark (LF) indicating the solder contains no lead.
(Caution: Some printed circuit boards may not come printed with the lead free mark due to their particular size.)

: LEAD FREE MARK

Unleaded solder has the following characteristics.

- Unleaded solder melts at a temperature about 40°C higher than ordinary solder.
  Ordinary soldering irons can be used but the iron tip has to be applied to the solder joint for a slightly longer time.
  Soldering irons using a temperature regulator should be set to about 350°C.
  Caution: The printed pattern (copper foil) may peel away if the heated tip is applied for too long, so be careful!
- Strong viscosity
  Unleaded solder is more viscous (sticky, less prone to flow) than ordinary solder so use caution not to let solder bridges occur such as on IC pins, etc.
- Usable with ordinary solder
  It is best to use only unleaded solder but unleaded solder may also be added to ordinary solder.

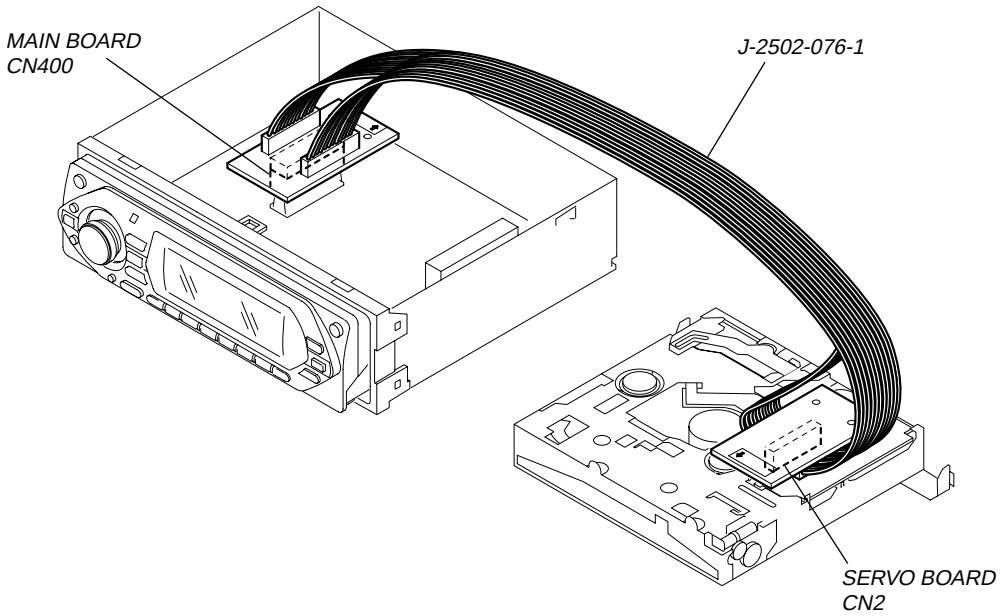

TABLE OF CONTENTS

1. GENERAL
Location of controls and basic operations 5
Connections 7

2. DISASSEMBLY
2-1. Sub (FL) Panel Assy 12
2-2. CD Mechanism Block 12
2-3. Main Board 13
2-4. Chassis (T) Sub Assy 13
2-5. Roller Arm Assy 14
2-6. Chassis (OP) Assy 14
2-7. Optical Pick-up 15
2-8. SL Motor Assy (M902) 15
2-9. LE Motor Assy (M903) 16
2-10. Servo Board 16

3. DIAGRAMS
3-1. Block Diagram – CD Section – 17
3-2. Block Diagram – Main Section – 18
3-3. Block Diagram – Display Section – 19
3-4. Circuit Boards Location 20
3-5. Printed Wiring Boards – CD Mechanism Section – 21
3-6. Schematic Diagram – CD Mechanism Section (1/2) – 22
3-7. Schematic Diagram – CD Mechanism Section (2/2) – 23
3-8. Printed Wiring Board – Main Section – 24
3-9. Schematic Diagram – Main Section (1/3) – 26
3-10. Schematic Diagram – Main Section (2/3) – 27
3-11. Schematic Diagram – Main Section (3/3) – 28
3-12. Printed Wiring Board – Sub Section – 29
3-13. Schematic Diagram – Sub Section – 30
3-14. Printed Wiring Board – Key Section – 31
3-15. Schematic Diagram – Key Section – 32

4. EXPLODED VIEWS
4-1. Main Section 40
4-2. Front Panel Section 41
4-3. CD Mechanism Section (1) (MG-611WA-186//Q) 42
4-4. CD Mechanism Section (2) (MG-611WA-186//Q) 43
4-5. CD Mechanism Section (3) (MG-611WA-186//Q) 44
4-6. CD Mechanism Section (4) (MG-611WA-186//Q) 45

5. ELECTRICAL PARTS LIST 46

SECTION 1
GENERAL

This section is extracted from instruction manual.

• CDX-GT50W/GT500: US, Canadian Model

Location of controls and basic operations

Main unit

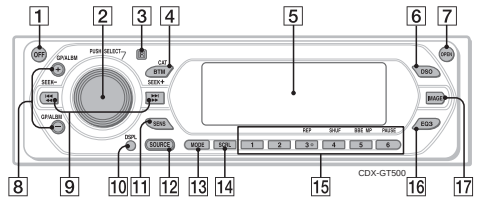

Front panel removed

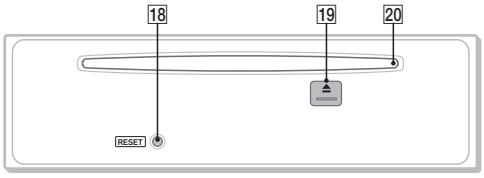

Card remote commander RM-X151

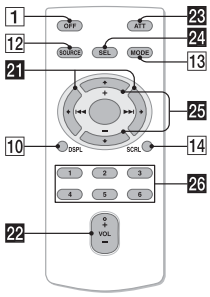

Refer to the pages listed for details. The corresponding buttons on the card remote commander control the same functions as those on the unit.

1 **OFF button**
To power off; stop the source.

2 **Volume control dial/select button** 9
To adjust volume (rotate); select setup items (press and rotate).

3 **Receptor for the card remote commander**

4 **BTM/CAT*1 button** 8
To start the BTM function (press and hold).

5 **Display window**

6 **DSO button** 2
To select the DSO mode (1, 2, 3 or off). The larger the number, the more enhanced the effect.

7 **OPEN button** 5

8 **GP*2/ALBM*3 +/– buttons*4**
To skip groups/albums (press); skip groups/albums continuously (press and hold).

9 **SEEK –/+ buttons**
CD:
To skip tracks (press); skip tracks continuously (press, then press again within about 1 second and hold); reverse/fast-forward a track (press and hold).
Radio:
To tune in stations automatically (press); find a station manually (press and hold).

10 **DSPL (display) button** 8
To change display items.

11 **SENS button**
To improve weak reception: Local/Mono.

12 **SOURCE button**
To power on; change the source (Radio/CD/MD*5/AUX/SAT*1).

13 **MODE button** 8, 10
To select the radio band (FM/AM)/select the SAT tuner band (mode)*1/select the unit*6.

14 **SCRL (scroll) button**
To scroll the display item.

15 **Number buttons**
CD/MD*5:
③: **REP** 8, 10
④: **SHUF** 8, 10
⑤: **BBE MP*7** 2
To activate the BBE MP function, set "BBE MP on." To cancel, set "BBE MP off."
⑥: **PAUSE*7**
To pause playback. To cancel, press again.
Radio:
To receive stored stations (press); store stations (press and hold).

16 **EQ3 (equalizer) button** 9
To select an equalizer type (Xplod, Vocal, Edge, Cruise, Space, Gravity, Custom or Off).

17 **IMAGE button** 2
To select the display image.
Movie mode 1-3 → Spectrum analyzer mode 1-5 → Space Producer mode → Wall paper mode 1-3 → Normal play/reception mode

18 **RESET button** 4

19 **⏏ (eject) button** 5
To eject the disc.

20 **Disc slot** 5
To insert the disc.

The following buttons on the card remote commander have also different buttons/functions from the unit.

21 **⬅ (⏮)/➡ (⏭) buttons**
To control CD/radio, the same as (SEEK) –/+ on the unit.

22 **VOL (volume) +/– button**
To adjust volume.

23 **ATT (attenuate) button**
To attenuate the sound. To cancel, press again.

24 **SEL (select) button**
The same as the select button on the unit.

25 **⬆ (+)/⬇ (–) buttons**
To control CD, the same as (GP/ALBM) +/– on the unit.

26 **Number buttons**
To receive stored stations (press); store stations (press and hold).

*1 *When the SAT tuner is connected.*
*2 *When an ATRAC CD is played.*
*3 *When an MP3/WMA is played.*
*4 *If the changer is connected, the operation is different, see page 10.*
*5 *When an MD changer is connected.*
*6 *When a CD/MD changer is connected.*
*7 *When playing back on this unit.*

Note
If the unit is turned off and the display disappears, it cannot be operated with the card remote commander unless (SOURCE) on the unit is pressed, or a disc is inserted to activate the unit first.

Tip
For details on how to replace the battery, see "Replacing the lithium battery of the card remote commander" on page 13.

• CDX-GT500: AEP, UK Model

Location of controls and basic operations

Main unit

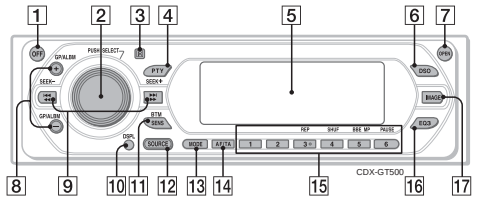

Front panel removed

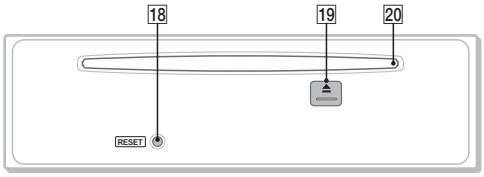

Card remote commander RM-X151

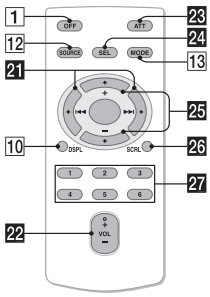

Refer to the pages listed for details. The corresponding buttons on the card remote commander control the same functions as those on the unit.

1 **OFF button**
To power off; stop the source.

2 **Volume control dial/select button** 11
To adjust volume (rotate); select setup items (press and rotate).

3 **Receptor for the card remote commander**

4 **PTY (Programme Type) button** 10
To select PTY in RDS.

5 **Display window**

6 **DSO button** 2
To select the DSO mode (1, 2, 3 or off). The larger the number, the more enhanced the effect.

7 **OPEN button** 5

8 **GP*1/ALBM*2 +/– buttons*3**
To skip groups/albums (press); skip groups/albums continuously (press and hold).

9 **SEEK –/+ buttons**
CD:
To skip tracks (press); skip tracks continuously (press, then press again within about 1 second and hold); reverse/fast-forward a track (press and hold).
Radio:
To tune in stations automatically (press); find a station manually (press and hold).

10 **DSPL (display) button** 8
To change display items.

11 **SENS/BTM button**
To improve weak reception: Local/Mono (press); start the BTM function (press and hold).

12 **SOURCE button**
To power on; change the source (Radio/CD/MD*4/AUX).

13 **MODE button** 8, 12
To select the radio band (FM/MW/LW)/select the unit*5.

14 **AF (Alternative Frequencies)/TA (Traffic Announcement) button** 9
To set AF and TA/TP in RDS.

15 **Number buttons**
CD/MD*4:
③: **REP** 8, 12
④: **SHUF** 8, 12
⑤: **BBE MP*6** 3
To activate the BBE MP function, set "BBE MP on." To cancel, set "BBE MP off."
⑥: **PAUSE*6**
To pause playback. To cancel, press again.
Radio:
To receive stored stations (press); store stations (press and hold).

16 **EQ3 (equalizer) button** 11
To select an equalizer type (Xplod, Vocal, Edge, Cruise, Space, Gravity, Custom or Off).

17 **IMAGE button** 2
To select the display image.
Movie mode 1-3 → Spectrum analyzer mode 1-5 → Space Producer mode → Wall paper mode 1-3 → Normal play/reception mode

18 **RESET button** 4

19 **⏏ (eject) button** 5
To eject the disc.

20 **Disc slot** 5
To insert the disc.

The following buttons on the card remote commander have also different buttons/functions from the unit.

21 **⬅ (⏮)/➡ (⏭) buttons**
To control CD/radio, the same as (SEEK) –/+ on the unit.

22 **VOL (volume) +/– button**
To adjust volume.

23 **ATT (attenuate) button**
To attenuate the sound. To cancel, press again.

24 **SEL (select) button**
The same as the select button on the unit.

25 **⬆ (+)/⬇ (–) buttons**
To control CD, the same as (GP/ALBM) +/– on the unit.

26 **SCRL (scroll) button**
To scroll display item.

27 **Number buttons**
To receive stored stations (press); store stations (press and hold).

*1 *When an ATRAC CD is played.*
*2 *When an MP3/WMA is played.*
*3 *If the changer is connected, the operation is different, see page 12.*
*4 *When an MD changer is connected.*
*5 *When a CD/MD changer is connected.*
*6 *When playing back on this unit.*

Note
If the unit is turned off and the display disappears, it cannot be operated with the card remote commander unless (SOURCE) on the unit is pressed, or a disc is inserted to activate the unit first.

Tip
For details on how to replace the battery, see "Replacing the lithium battery of the card remote commander" on page 15.

• CDX-GT500EE

Location of controls and basic operations

Main unit

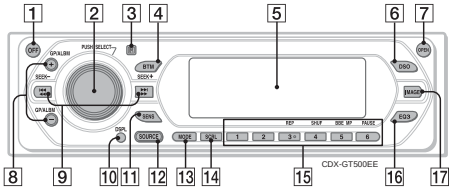

Front panel removed

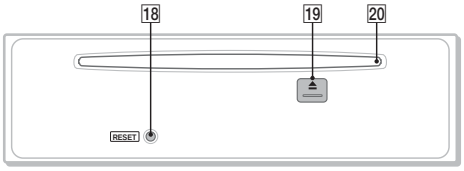

Card remote commander RM-X151

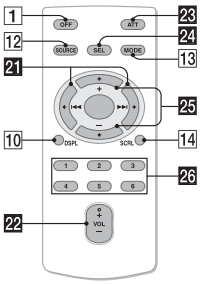

Refer to the pages listed for details. The corresponding buttons on the card remote commander control the same functions as those on the unit.

1 **OFF button**
To power off; stop the source.

2 **Volume control dial/select button** 9
To adjust volume (rotate); select setup items (press and rotate).

3 **Receptor for the card remote commander**

4 **BTM button** 8
To start the BTM function (press and hold).

5 **Display window**

6 **DSO button** 2
To select the DSO mode (1, 2, 3 or off). The larger the number, the more enhanced the effect.

7 **OPEN button** 5

8 **GP*1/ALBM*2 +/– buttons*3**
To skip groups/albums (press); skip groups/albums continuously (press and hold).

9 **SEEK –/+ buttons**
CD:
To skip tracks (press); skip tracks continuously (press, then press again within about 1 second and hold); reverse/fast-forward a track (press and hold).
Radio:
To tune in stations automatically (press); find a station manually (press and hold).

10 **DSPL (display) button** 8
To change display items.

11 **SENS button**
To improve weak reception: Local/Mono.

12 **SOURCE button**
To power on; change the source (Radio/CD/MD*4/AUX).

13 **MODE button** 8, 10
To select the radio band (FM/AM)/select the unit*5.

14 **SCRL (scroll) button**
To scroll display item.

15 **Number buttons**
CD/MD*4:
(3): **REP** 8, 10
(4): **SHUF** 8, 10
(5): **BBE MP***6 2
To activate the BBE MP function, set "BBE MP on." To cancel, set "BBE MP off."
(6): **PAUSE***6
To pause playback. To cancel, press again.
Radio:
To receive stored stations (press); store stations (press and hold).

16 **EQ3 (equalizer) button** 9
To select an equalizer type (Xplod, Vocal, Edge, Cruise, Space, Gravity, Custom or Off).

17 **IMAGE button** 2
To select the display image.
Movie mode 1-3 → Spectrum analyzer mode 1-5 → Space Producer mode → Wall paper mode 1-3 → Normal play/reception mode

18 **RESET button** 4

19 **⏏ (eject) button** 5
To eject the disc.

20 **Disc slot** 5
To insert the disc.

The following buttons on the card remote commander have also different buttons/functions from the unit.

21 **⬅ (⏮)/➡ (⏭) buttons**
To control CD/radio, the same as (SEEK) –/+ on the unit.

22 **VOL (volume) +/– button**
To adjust volume.

23 **ATT (attenuate) button**
To attenuate the sound. To cancel, press again.

24 **SEL (select) button**
The same as the select button on the unit.

25 **⬆ (+)/⬇ (–) buttons**
To control CD, the same as (GP/ALBM) +/– on the unit.

26 **Number buttons**
To receive stored stations (press); store stations (press and hold).

*1 *When an ATRAC CD is played.*
*2 *When an MP3/WMA is played.*
*3 *If the changer is connected, the operation is different, see page 10.*
*4 *When an MD changer is connected.*
*5 *When a CD/MD changer is connected.*
*6 *When playing back on this unit.*

Note
If the unit is turned off and the display disappears, it cannot be operated with the card remote commander unless (SOURCE) on the unit is pressed, or a disc is inserted to activate the unit first.

Tip
For details on how to replace the battery, see "Replacing the lithium battery of the card remote commander" on page 13.

• CDX-GT550

Location of controls and basic operations

Main unit

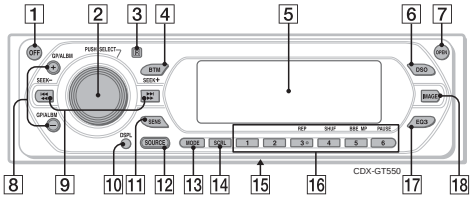

Front panel removed

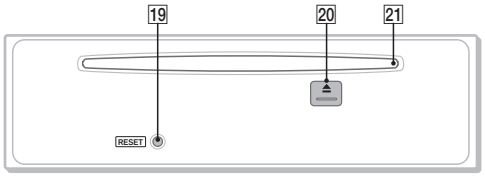

Card remote commander RM-X151

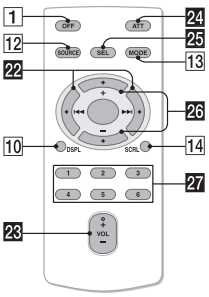

Refer to the pages listed for details. The corresponding buttons on the card remote commander control the same functions as those on the unit.

1 **OFF button**
To power off; stop the source.

2 **Volume control dial/select button** 9
To adjust volume (rotate); select setup items (press and rotate).

3 **Receptor for the card remote commander**

4 **BTM button** 8
To start the BTM function (press and hold).

5 **Display window**

6 **DSO button** 2
To select the DSO mode (1, 2, 3 or off). The larger the number, the more enhanced the effect.

7 **OPEN button** 5

8 **GP*1/ALBM*2 +/– buttons*3**
To skip groups/albums (press); skip groups/albums continuously (press and hold).

9 **SEEK –/+ buttons**
CD:
To skip tracks (press); skip tracks continuously (press, then press again within about 1 second and hold); reverse/fast-forward a track (press and hold).
Radio:
To tune in stations automatically (press); find a station manually (press and hold).

10 **DSPL (display) button** 8
To change display items.

11 **SENS button**
To improve weak reception: Local/Mono.

12 **SOURCE button**
To power on; change the source (Radio/CD/MD*4/AUX).

13 **MODE button** 8, 10
To select the radio band (FM/AM)/select the unit*5.

14 **SCRL (scroll) button**
To scroll display item.

15 **Frequency select switch** (located on the bottom of the unit)
See "Frequency Select switch" in the supplied installation/connections manual.

16 **Number buttons**
CD/MD*4:
(3): **REP** 8, 10
(4): **SHUF** 8, 10
(5): **BBE MP***6 2
To activate the BBE MP function, set "BBE MP on." To cancel, set "BBE MP off."
(6): **PAUSE***6
To pause playback. To cancel, press again.
Radio:
To receive stored stations (press); store stations (press and hold).

17 **EQ3 (equalizer) button** 9
To select an equalizer type (Xplod, Vocal, Edge, Cruise, Space, Gravity, Custom or Off).

18 **IMAGE button** 2
To select the display image.
Movie mode 1-3 → Spectrum analyzer mode 1-5 → Space Producer mode → Wall paper mode 1-3 → Normal play/reception mode

19 **RESET button** 4

20 **⏏ (eject) button** 5
To eject the disc.

21 **Disc slot** 5
To insert the disc.

The following buttons on the card remote commander have also different buttons/functions from the unit.

22 **⬅ (⏮)/➡ (⏭) buttons**
To control CD/radio, the same as (SEEK) –/+ on the unit.

23 **VOL (volume) +/– button**
To adjust volume.

24 **ATT (attenuate) button**
To attenuate the sound. To cancel, press again.

25 **SEL (select) button**
The same as the select button on the unit.

26 **⬆ (+)/⬇ (–) buttons**
To control CD, the same as (GP/ALBM) +/– on the unit.

27 **Number buttons**
To receive stored stations (press); store stations (press and hold).

*1 *When an ATRAC CD is played.*
*2 *When an MP3/WMA is played.*
*3 *If the changer is connected, the operation is different, see page 10.*
*4 *When an MD changer is connected.*
*5 *When a CD/MD changer is connected.*
*6 *When playing back on this unit.*

Note
If the unit is turned off and the display disappears, it cannot be operated with the card remote commander unless (SOURCE) on the unit is pressed, or a disc is inserted to activate the unit first.

Tip
For details on how to replace the battery, see "Replacing the lithium battery of the card remote commander" on page 13.

• CONNECTIONS
• CDX-GT50W/GT500: US, Canadian Model

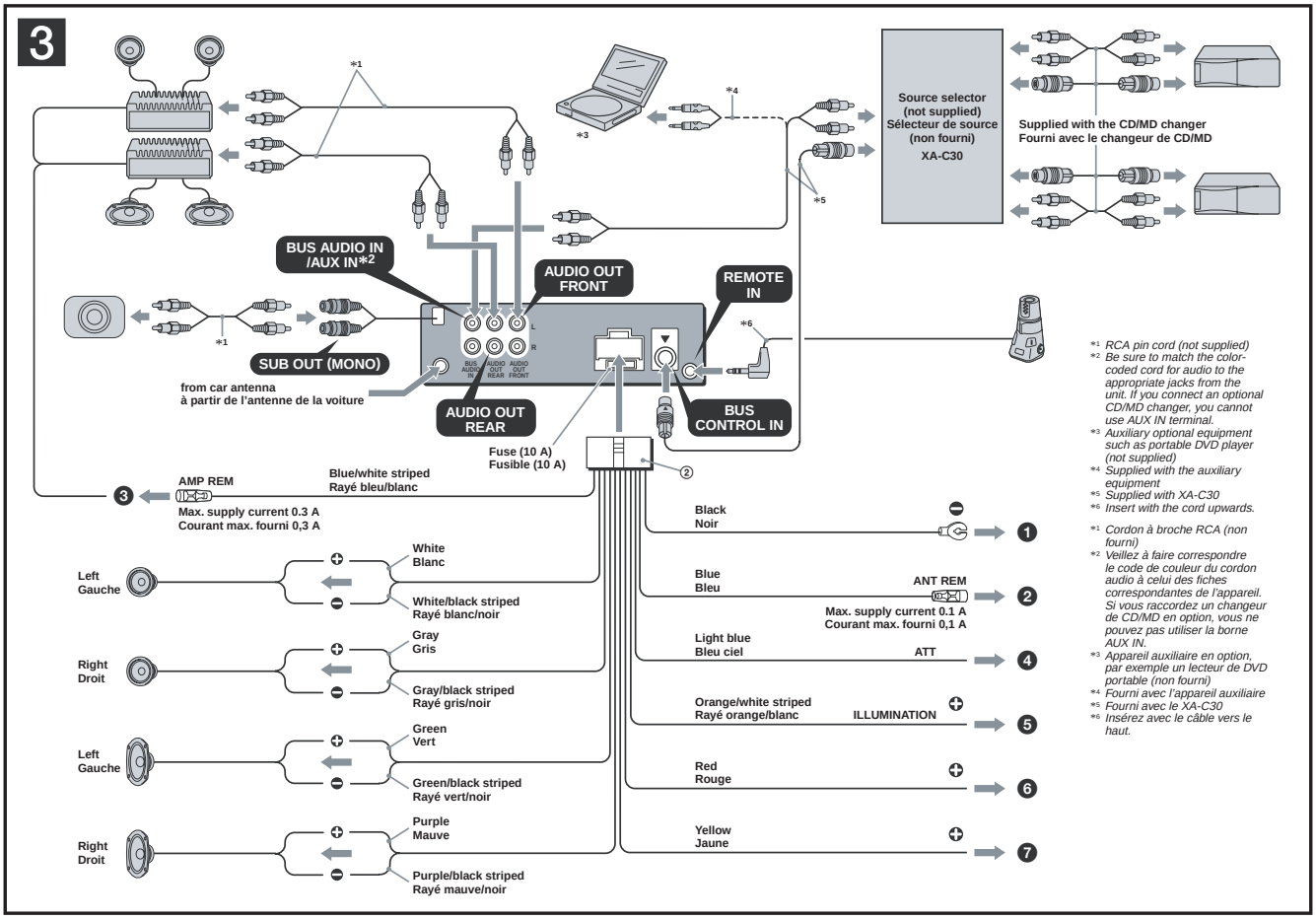

Connection diagram 3

❶ **To a metal surface of the car**
First connect the black ground lead, then connect the orange/white striped, yellow, and red power input leads.

❷ **To the power antenna control lead or power supply lead of antenna booster amplifier**
Notes
- *It is not necessary to connect this lead if there is no power antenna or antenna booster, or with a manually-operated telescopic antenna.*
- *When your car has a built-in FM/AM antenna in the rear/side glass, see "Notes on the control and power supply leads."*

❸ **To AMP REMOTE IN of an optional power amplifier**
This connection is only for amplifiers. Connecting any other system may damage the unit.

❹ **To the interface cable of a car telephone**

❺ **To a car's illumination signal**
Be sure to connect the black ground lead to a metal surface of the car first.

❻ **To the +12 V power terminal which is energized in the accessory position of the ignition key switch**
Notes
- *If there is no accessory position, connect to the +12 V power (battery) terminal which is energized at all times. Be sure to connect the black ground lead to a metal surface of the car first.*
- *When your car has a built-in FM/AM antenna in the rear/side glass, see "Notes on the control and power supply leads."*

❼ **To the +12 V power terminal which is energized at all times**
Be sure to connect the black ground lead to a metal surface of the car first.

Notes on the control and power supply leads
- *The power antenna control lead (blue) supplies +12 V DC when you turn on the tuner.*
- *When your car has built-in FM/AM antenna in the rear/side glass, connect the power antenna control lead (blue) or the accessory power input lead (red) to the power terminal of the existing antenna booster. For details, consult your dealer.*
- *A power antenna without a relay box cannot be used with this unit.*

Memory hold connection
When the yellow power input lead is connected, power will always be supplied to the memory circuit even when the ignition switch is turned off.

Notes on speaker connection
- *Before connecting the speakers, turn the unit off.*
- *Use speakers with an impedance of 4 to 8 ohms, and with adequate power handling capacities to avoid its damage.*
- *Do not connect the speaker terminals to the car chassis, or connect the terminals of the right speakers with those of the left speaker.*
- *Do not connect the ground lead of this unit to the negative (–) terminal of the speaker.*
- *Do not attempt to connect the speakers in parallel.*
- *Connect only passive speakers. Connecting active speakers (with built-in amplifiers) to the speaker terminals may damage the unit.*
- *To avoid a malfunction, do not use the built-in speaker leads installed in your car if the unit shares a common negative (–) lead for the right and left speakers.*
- *Do not connect the unit's speaker leads to each other.*

Note on connection
If speaker and amplifier are not connected correctly, "Failure" appears in the display. In this case, make sure the speaker and amplifier are connected correctly.

Schéma de raccordement 3

❶ **À un point métallique de la voiture**
Branchez d'abord le fil de masse noir et, ensuite, les fils d'entrée d'alimentation rayé orange/blanc, jaune, et rouge.

❷ **Vers le câble de commande d'antenne électrique ou le câble d'alimentation de l'amplificateur d'antenne**
Remarques
- *Il n'est pas nécessaire de raccorder ce câble s'il n'y a pas d'antenne électrique ni d'amplificateur d'antenne, ou avec une antenne télescopique manuelle.*
- *Si votre voiture est équipée d'une antenne FM/AM intégrée dans la vitre arrière/latérale, voir « Remarques sur les câbles de commande et d'alimentation ».*

❸ **Au niveau de AMP REMOTE IN de l'amplificateur de puissance en option**
Ce raccordement s'applique uniquement aux amplificateurs. Le branchement de tout autre système risque d'endommager l'appareil.

❹ **Vers le cordon de liaison d'un téléphone de voiture**

❺ **Vers le connecteur du signal d'éclairage de la voiture**
Raccordez d'abord le câble de mise à la masse noir à un point métallique du véhicule.

❻ **À la borne +12 V qui est alimentée quand la clé de contact est sur la position accessoires**
Remarques
- *S'il n'y a pas de position accessoires, raccordez la borne d'alimentation (batterie) +12 V qui est alimentée en permanence.*
  Raccordez d'abord le câble de mise à la masse noir à un point métallique du véhicule.
- *Si votre voiture est équipée d'une antenne FM/AM intégrée dans la vitre arrière/latérale, voir « Remarques sur les câbles de commande et d'alimentation ».*

❼ **À la borne +12 V qui est alimentée en permanence**
Raccordez d'abord le câble de mise à la masse noir à un point métallique du véhicule.

Remarques sur les câbles de commande et d'alimentation
- *Le câble de commande d'antenne électrique (bleu) fournit une alimentation de + 12 V CC lorsque vous mettez la radio sous tension.*
- *Lorsque votre voiture est équipée d'une antenne FM/AM intégrée dans la vitre arrière/latérale, raccordez le câble de commande d'antenne (bleu) ou l'entrée d'alimentation des accessoires (rouge) à la borne d'alimentation de l'amplificateur d'antenne existant. Pour plus de détails, consultez votre détaillant.*
- *Une antenne électrique sans boîtier de relais ne peut pas être utilisée avec cet appareil.*

Raccordement pour la conservation de la mémoire
Lorsque le câble d'entrée d'alimentation jaune est raccordé, le circuit de la mémoire est alimenté en permanence même si la clé de contact est sur la position d'arrêt.

Remarques sur le raccordement des haut-parleurs
- *Avant de raccorder les haut-parleurs, mettez l'appareil hors tension.*
- *Utilisez des haut-parleurs ayant une impédance de 4 à 8 ohms avec une capacité électrique adéquate pour éviter de les endommager.*
- *Ne raccordez pas les bornes du système de haut-parleurs au châssis de la voiture et ne raccordez pas les bornes des haut-parleurs droit à celles du haut-parleur gauche.*
- *Ne raccordez pas le câble de mise à la masse de cet appareil à la borne négative (–) du haut-parleur.*
- *N'essayez pas de raccorder les haut-parleurs en parallèle.*
- *Raccordez uniquement des haut-parleurs passifs. Le raccordement de haut-parleurs actifs (avec amplificateurs intégrés) aux bornes des haut-parleurs peut endommager l'appareil.*
- *Pour éviter tout problème de fonctionnement, n'utilisez pas les câbles des haut-parleurs intégrés installés dans votre voiture si l'appareil partage un câble négatif commun (–) pour les haut-parleurs droit et gauche.*
- *Ne raccordez pas entre eux les cordons des haut-parleurs de l'appareil.*

Remarque sur le raccordement
Si les haut-parleurs et l'amplificateur ne sont pas raccordés correctement, le message « Failure » s'affiche. Dans ce cas, assurez-vous que les haut-parleurs et l'amplificateur sont bien raccordés.

• CDX-GT500: AEP, UK Model

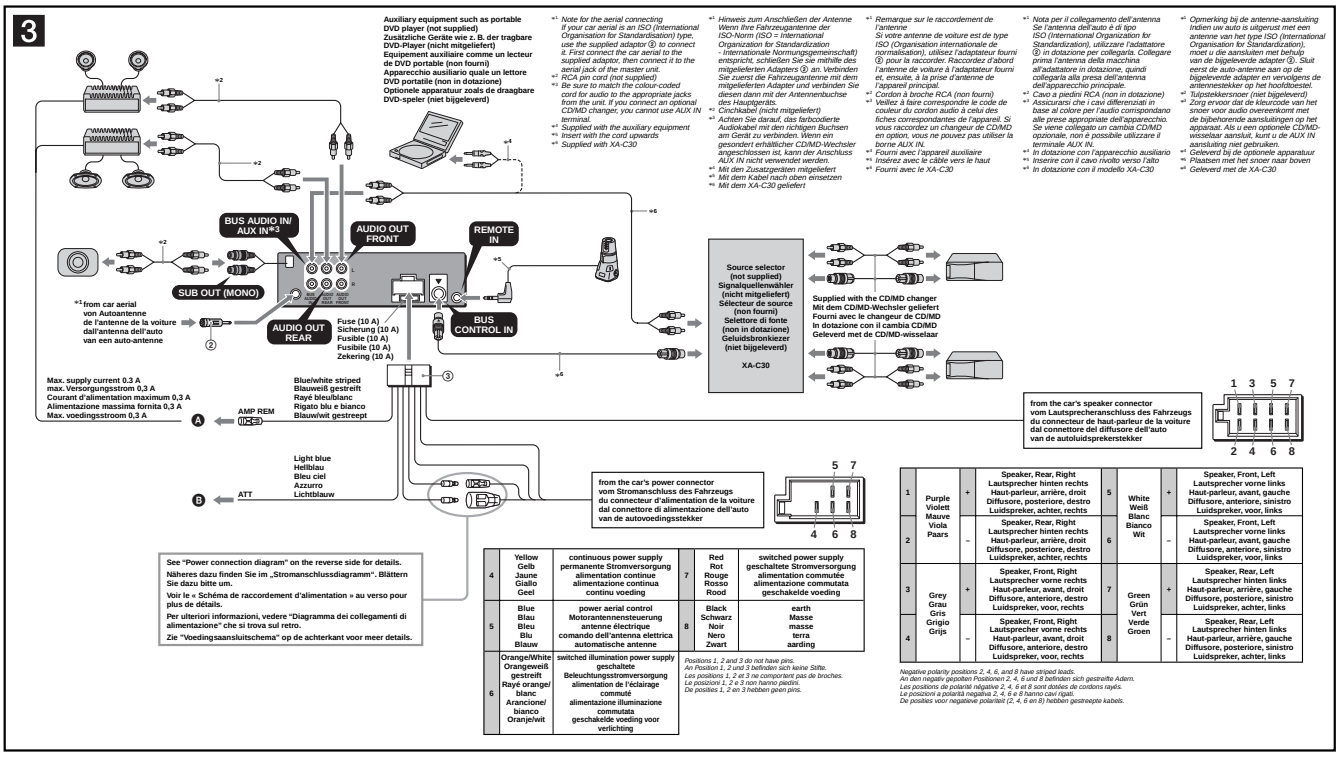

4	Yellow Gelb Jaune Giallo Geel	continuous power supply permanente Stromversorgung alimentation continue alimentazione continua continu voeding	7	Red Rot Rouge Rosso Rood	switched power supply geschaltete Stromversorgung alimentation commutée alimentazione commutata geschakelde voeding
5	Blue Blau Bleu Blu Blauw	power aerial control Motorantennensteuerung antenne électrique comando dell'antenna elettrica automatische antenne	8	Black Schwarz Noir Nero Zwart	earth Masse masse terra aarding
6	Orange/White Orangeweiß gestreift Rayé orange/blanc Arancione/bianco Oranje/wit	switched illumination power supply geschaltete Beleuchtungsstromversorgung alimentation de l'éclairage commuté alimentazione illuminazione commutata geschakelde voeding voor verlichting			

Positions 1, 2 and 3 do not have pins.
An Position 1, 2 und 3 befinden sich keine Stifte.
Les positions 1, 2 et 3 ne comportent pas de broches.
Le posizioni 1, 2 e 3 non hanno piedini.
De posities 1, 2 en 3 hebben geen pins.

1	Purple Violett Mauve Viola Paars	+	Speaker, Rear, Right Lautsprecher hinten rechts Haut-parleur, arrière, droit Diffusore, posteriore, destro Luidspreker, achter, rechts	5	White Weiß Blanc Bianco Wit	+	Speaker, Front, Left Lautsprecher vorne links Haut-parleur, avant, gauche Diffusore, anteriore, sinistro Luidspreker, voor, links
2		–	Speaker, Rear, Right Lautsprecher hinten rechts Haut-parleur, arrière, droit Diffusore, posteriore, destro Luidspreker, achter, rechts	6		–	Speaker, Front, Left Lautsprecher vorne links Haut-parleur, avant, gauche Diffusore, anteriore, sinistro Luidspreker, voor, links
3	Grey Grau Gris Grigio Grijs	+	Speaker, Front, Right Lautsprecher hinten links Haut-parleur, avant, droit Diffusore, anteriore, destro Luidspreker, voor, rechts	7	Green Grün Vert Verde Groen	+	Speaker, Rear, Left Lautsprecher hinten links Haut-parleur, arrière, gauche Diffusore, posteriore, sinistro Luidspreker, achter, links
4		–	Speaker, Front, Right Lautsprecher vorne rechts Haut-parleur, avant, droit Diffusore, anteriore, destro Luidspreker, voor, rechts	8		–	Speaker, Rear, Left Lautsprecher hinten links Haut-parleur, arrière, gauche Diffusore, posteriore, sinistro Luidspreker, achter, links

Negative polarity positions 2, 4, 6, and 8 have striped leads.
An den negativ gepolten Positionen 2, 4, 6 und 8 befinden sich gestreifte Adern.
Les positions de polarité négative 2, 4, 6 et 8 sont dotées de cordons rayés.
Le posizioni a polarità negativa 2, 4, 6 e 8 hanno cavi rigati.
De posities voor negatieve polariteit (2, 4, 6 en 8) hebben gestreepte kabels.

Connection diagram 3

Ⓐ To AMP REMOTE IN of an optional power amplifier
This connection is only for amplifiers. Connecting any other system may damage the unit.

Ⓑ To the interface cable of a car telephone

Warning

If you have a power aerial without a relay box, connecting this unit with the supplied power connecting lead ③ may damage the aerial.

Notes on the control power and suppy leads
- *The power aerial control lead (blue) supplies +12 V DC when you turn on the tuner, or when you activate the AF (Alternative Frequency) or TA (Traffic Announcement) function.*
- *When your car has built-in FM/MW/LW aerial in the rear/side glass, connect the power aerial control lead (blue) or the accessory power input lead (red) to the power terminal of the existing aerial booster. For details, consult your dealer.*
- *A power aerial without a relay box cannot be used with this unit.*

Memory hold connection
When the yellow power input lead is connected, power will always be supplied to the memory circuit even when the ignition switch is turned off.

Notes on speaker connection
- *Before connecting the speakers, turn the unit off.*
- *Use speakers with an impestance of 4 to 8 ohms, and with adequate power handling capacities to avoid its damage.*
- *Do not connect the speaker terminals to the car chassis, or connect the terminals of the right speakers with those of the left speaker.*
- *Do not connect the earth lead of this unit to the negative (–) terminal of the speaker.*
- *Do not attempt to connect the speakers in parallel.*
- *Connect only passive speakers. Connecting active speakers (with built-in amplifiers) to the speaker terminals may damage the unit.*
- *To avoid a malfunction, do not use the built-in speaker leads installed in your car if the unit shares a common negative (–) lead for the right and left speakers.*
- *Do not connect the unit's speaker leads to each other.*

Note on connection
If speaker and amplifier are not connected correctly, "Failure" appears in the display. In this case, make sure the speaker and amplifier are connected correctly.

Anschlussdiagramm 3

Ⓐ An AMP REMOTE IN des gesondert erhältlichen Endverstärkers
Dieser Anschluss ist ausschließlich für Verstärker gedacht. Schließen Sie nichts anderes daran an. Andernfalls kann das Gerät beschädigt werden.

Ⓑ An Schnittstellenkabel eines Autotelefons

Warnung

Wenn Sie eine Motorantenne ohne Relaiskästchen verwenden, kann durch Anschließen dieses Geräts mit dem mitgelieferten Stromversorgungskabel ③ die Antenne beschädigt werden.

Hinweise zu den Steuer- und Stromversorgungsleitungen
- *Die Motorantennen-Steuerleitung (blau) liefert +12 V Gleichstrom, wenn Sie den Tuner einschalten oder die AF- (Alternativfrequenzsuche) oder die TA-Funktion (Verkehrsdurchsagen) aktivieren.*
- *Wenn das Fahrzeug mit einer in der Heck-/ Seitenfensterscheibe integrierten FM (UKW)/MW/LW-Antenne ausgestattet ist, schließen Sie die Motorantennen-Steuerleitung (blau) oder die Zubehörstromversorgungsleitung (rot) an den Stromversorgungsanschluss des vorhandenen Antennenverstärkers an. Näheres dazu erfahren Sie bei Ihrem Händler.*
- *Es kann nur eine Motorantenne mit Relaiskästchen angeschlossen werden.*

Stromversorgung des Speichers
Wenn die gelbe Stromversorgungsleitung angeschlossen ist, wird der Speicher stets (auch bei ausgeschalteter Zündung) mit Strom versorgt.

Hinweise zum Lautsprecheranschluss
- *Schalten Sie das Gerät aus, bevor Sie die Lautsprecher anschließen.*
- *Verwenden Sie Lautsprecher mit einer Impedanz zwischen 4 und 8 Ohm und ausreichender Belastbarkeit. Ansonsten können die Lautsprecher beschädigt werden.*
- *Verbinden Sie die Lautsprecheranschlüsse nicht mit dem Wagenchassis und verbinden Sie auch nicht die Anschlüsse des rechten mit denen des linken Lautsprechers.*
- *Verbinden Sie die Masseleitung dieses Geräts nicht mit dem negativen (–) Lautsprecheranschluss.*
- *Versuchen Sie nicht, Lautsprecher parallel anzuschließen.*
- *An die Lautsprecheranschlüsse dieses Geräts dürfen nur Passivlautsprecher angeschlossen werden. Schließen Sie keine Aktivlautsprecher (Lautsprecher mit eingebauten Verstärkern) an, da das Gerät sonst beschädigt werden könnte.*
- *Um Fehlfunktionen zu vermeiden, verwenden Sie nicht die im Fahrzeug installierten, integrierten Lautsprecherleitungen, wenn am Ende eine gemeinsame negative (–) Leitung für den rechten und den linken Lautsprecher verwendet wird.*
- *Verbinden Sie nicht die Lautsprecherkabel des Geräts miteinander.*

Hinweis zum Anschließen
Wenn Lautsprecher und Verstärker nicht richtig angeschlossen sind, erscheint „Failure" im Display. Vergewissern Sie sich in diesem Fall, dass Lautsprecher und Verstärker richtig angeschlossen sind.

Schémas de raccordement 3

Ⓐ Au niveau du AMP REMOTE IN d'un amplificateur de puissance facultatif
Ce raccordement existe seulement pour les amplificateurs. Le raccordement à tout autre système peut endommager l'appareil.

Ⓑ Vers le cordon de liaison d'un téléphone de voiture

Avertissement

Si vous disposez d'une antenne électrique sans boîtier de relais, le branchement de cet appareil au moyen du cordon d'alimentation fourni ③ risque d'endommager l'antenne.

Remarques sur les câbles de commande et d'alimentation
- *Le câble de commande (bleu) fournit du courant continu de +12 V lorsque vous mettez le tuner sous tension ou lorsque vous activez la fonction AF (fréquence alternative) ou TA (informations de circulation).*
- *Lorsque votre voiture est équipée d'une antenne FM/MW/LW (GO/LW /PO) intégrée dans la vitre arrière/latérale, raccordez le câble de commande d'antenne (bleu) ou l'entrée d'alimentation des accessoires (rouge) au borner de l'amplificateur d'antenne existant. Pour plus de détails, consultez votre revendeur.*
- *Une antenne électrique sans boîtier de relais ne peut pas être utilisée avec cet appareil.*

Raccordement pour la conservation de la mémoire
Lorsque le câble de commande d'antenne jaune est connecté, le circuit de la mémoire est alimenté en permanence même si la clé de contact est en position d'arrêt.

Remarques sur le raccordement des haut-parleurs
- *Avant de raccorder les haut-parleurs, mettre l'appareil hors tension.*
- *Utiliser des haut-parleurs ayant une impédance de 4 à 8 ohms et une capacité adéquate sous peine de les endommager.*
- *Ne pas raccorder les bornes du système de haut-parleurs au châssis de la voiture et ne pas connecter les bornes du haut-parleur droit à celles du haut-parleur gauche.*
- *Ne pas raccorder le câble de mise à la masse de cet appareil à la borne négative (–) du haut-parleur.*
- *Ne pas tenter de raccorder les haut-parleurs en parallèle.*
- *Connecter uniquement des haut-parleurs passifs. La connexion de haut-parleurs actifs (avec des amplificateurs intégrés) aux bornes des haut-parleurs pourrait endommager l'appareil.*
- *Pour éviter tout problème de fonctionnement, n'utilisez pas les câbles des haut-parleurs intégrés installés dans votre voiture si l'appareil dispose d'un câble négatif commun (–) pour les haut-parleurs droit et gauche.*
- *Ne raccordez pas entre eux les cordons des haut-parleurs de l'appareil.*

Remarque sur le raccordement
Si les enceintes et l'amplificateur ne sont pas raccordés correctement, le message « Failure » s'affiche. Dans ce cas, assurez-vous que les enceintes et l'amplificateur sont raccordés correctement.

Schema di collegamento 3

Ⓐ A AMP REMOTE IN di un amplificatore di potenza opzionale
Questo collegamento è riservato esclusivamente agli amplificatori. Non collegare un tipo di sistema diverso onde evitare di causare danni all'apparecchio.

Ⓑ Al cavo di interfaccia di un telefono per auto

Avvertenza

Quando si collega l'apparecchio con il cavo di alimentazione in dotazione ③, si potrebbe danneggiare l'antenna elettrica se questa non dispone di scatola a relè.

Note sui cavi di controllo e di alimentazione
- *Il cavo (blu) di controllo dell'antenna elettrica fornisce alimentazione pari a +12 V CC quando si attiva il sintonizzatore oppure la funzione TA (notiziario sul traffico) o AF (frequenza alternativa).*
- *Se l'automobile è dotata di antenna FM/MW/LW incorporata nel vetro posteriore/laterale, collegare il cavo (blu) di controllo dell'antenna elettrica o il cavo (rosso) di ingresso dell'alimentazione accessoria al terminale di alimentazione del preamplificatore dell'antenna esistente. Per ulteriori informazioni, consultare il proprio fornitore.*
- *Non è possibile usare un'antenna elettrica senza scatola a relè con questo apparecchio.*

Collegamento per la conservazione della memoria
Quando il cavo di ingresso alimentazione giallo è collegato, viene sempre fornita alimentazione al circuito di memoria anche quando l'interruttore di accensione è spento.

Note sul collegamento dei diffusori
- *Prima di collegare i diffusori spegnere l'apparecchio.*
- *Usare diffusori di impedenza compresa tra 4 e 8 ohm e con capacità di potenza adeguata, altrimenti i diffusori potrebbero venire danneggiati.*
- *Non collegare i terminali del sistema diffusori al telaio dell'auto e non collegare i terminali del diffusore destro a quelli del diffusore sinistro.*
- *Non collegare il cavo di terra di questo apparecchio al terminale negativo (–) del diffusore.*
- *Non collegare i diffusori in parallelo.*
- *Assicurarsi di collegare soltanto diffusori passivi, poiché il collegamento di diffusori attivi, dotati di amplificatori incorporati, ai terminali dei diffusori potrebbe danneggiare l'apparecchio.*
- *Per evitare problemi di funzionamento, non utilizzare i cavi dei diffusori incorporati installati nell'automobile se l'apparecchio condivide un cavo comune negativo (–) per i diffusori destro e sinistro.*
- *Non collegare fra loro i cavi dei diffusori dell'apparecchio.*

Nota sui collegamenti
Se l'amplificatore e il diffusore non sono collegati correttamente, "Failure" viene visualizzato nel display. In tal caso, accertarsi che l'amplificatore e il diffusore siano collegati correttamente.

Aansluitschema 3

Ⓐ Naar AMP REMOTE IN van een optionele eindversterker
Deze aansluiting is alleen bedoeld voor versterkers. Door een ander systeem aan te sluiten kan het apparaat worden beschadigd.

Ⓑ Naar het interfacesnoer van een autotelefoon

Waarschuwing

Indien u een elektrische antenne hebt zonder relaiskast, kan het aansluiten van dit apparaat met het bijgeleverde netsnoer ③ de antenne beschadigen.

Opmerkingen over de bedienings- en voedingskabels
- *De antennevoedingskabel (blauw) levert +12 V gelijkstroom wanneer u de tuner inschakelt of de AF (Alternative Frequency) of TA (Traffic Announcement) functie activeert.*
- *Wanneer uw auto is uitgerust met een FM/MW/LW-antenne in de achterruit/zijruit, moet u de antennevoedingskabel (blauw) of de hulpvoedingskabel (rood) aansluiten op de voedingsingang van de bestaande antenneversterker. Raadpleeg uw dealer voor meer details.*
- *Met dit apparaat is het niet mogelijk een automatische antenne zonder relaiskast te gebruiken.*

Instandhouden van het geheugen
Zolang de gele stroomkaad is aangesloten, blijft de stroomvoorziening van het geheugen intact, ook wanneer het contact van de auto wordt uitgeschakeld.

Opmerkingen betreffende het aansluiten van de luidsprekers
- *Zorg dat het apparaat is uitgeschakeld, alvorens de luidsprekers aan te sluiten.*
- *Gebruik luidsprekers met een impedantie van 4 tot 8 Ohm en let op dat die het vermogen van de versterker kunnen verwerken. Als u dit niet doet, kunnen de luidsprekers ernstig beschadigd raken.*
- *Verbind in geen geval de aansluitingen van de luidsprekers met het chassis van de auto en sluit de aansluitingen van de rechter- en linkerluidspreker niet op elkaar aan.*
- *Verbind de aardddraad van dit apparaat niet met de negatieve (–) aansluiting van de luidspreker.*
- *Probeer nooit de luidsprekers parallel aan te sluiten.*
- *Sluit geen actieve luidsprekers (met ingebouwde versterkers) aan op de luidsprekeraansluiting van dit apparaat. Dit zal leiden tot beschadiging van de actieve luidsprekers. Sluit dus altijd uitsluitend luidsprekers zonder ingebouwde versterker aan.*
- *Om defecten te vermijden mag u de bestaande luidsprekerbedrading in uw auto niet gebruiken wanneer er een gemeenschappelijke negatieve (–) draad is voor de rechter- en linkerluidsprekers.*
- *Verbind de luidsprekerdraden niet met elkaar.*

Opmerking over aansluiten
Als de luidspreker en versterker niet correct zijn aangesloten, wordt "Failure" in het display weergegeven. In dit geval moet u zorgen dat de luidspreker en versterker correct zijn aangesloten.

• CDX-GT500EE

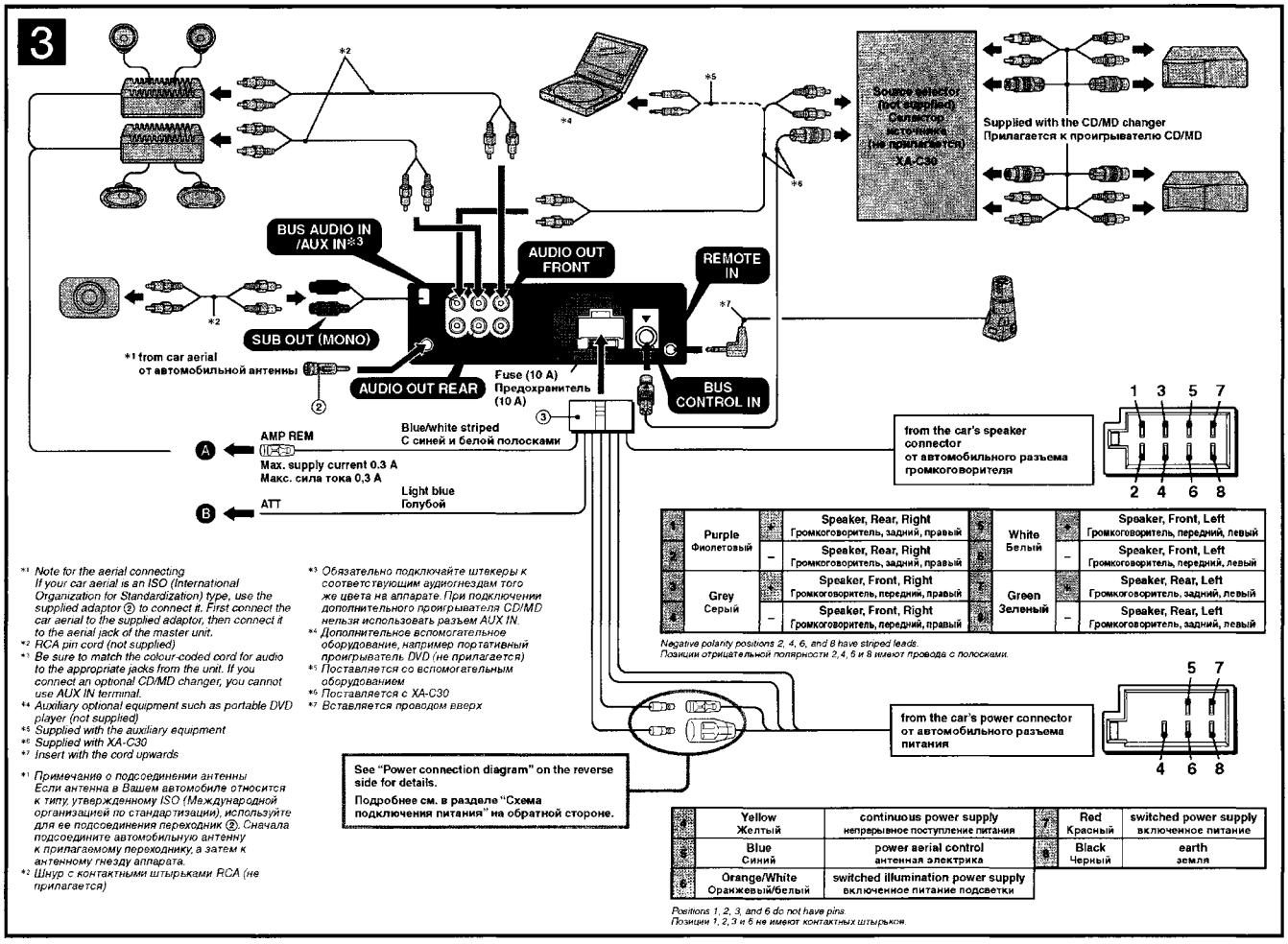

1	Purple Фиолетовый	+	Speaker, Rear, Right Громкоговоритель, задний, правый	5	White Белый	+	Speaker, Front, Left Громкоговоритель, передний, левый
2		–	Speaker, Rear, Right Громкоговоритель, задний, правый	6		–	Speaker, Front, Left Громкоговоритель, передний, левый
3	Grey Серый	+	Speaker, Front, Right Громкоговоритель, передний, правый	7	Green Зеленый	+	Speaker, Rear, Left Громкоговоритель, задний, левый
4		–	Speaker, Front, Right Громкоговоритель, передний, правый	8		–	Speaker, Rear, Left Громкоговоритель, задний, левый

1	Yellow Желтый	continuous power supply непрерывное поступление питания	7	Red Красный	switched power supply включенное питание
2	Blue Синий	power aerial control антенная электрика	8	Black Черный	earth земля
3	Orange/White Оранжевый/белый	switched illumination power supply включенное питание подсветки			

*1 Note for the aerial connecting
If your car aerial is an ISO (International Organization for Standardization) type, use the supplied adaptor ② to connect it. First connect the car aerial to the supplied adaptor, then connect it to the aerial jack of the master unit.
*2 RCA pin cord (not supplied)
*3 Be sure to match the colour-coded cord for audio to the appropriate jacks from the unit. If you connect an optional CD/MD changer, you cannot use AUX IN terminal.
*4 Auxiliary optional equipment such as portable DVD player (not supplied)
*5 Supplied with the auxiliary equipment
*6 Supplied with XA-C30
*7 Insert with the cord upwards

*1 Примечание о подсоединении антенны
Если антенна в Вашем автомобиле относится к типу, утвержденному ISO (Международной организацией по стандартизации), используйте для ее подсоединения переходник ②. Сначала подсоедините автомобильную антенну к прилагаемому переходнику, а затем к антенному гнезду аппарата.
*2 Шнур с контактными штырьками RCA (не прилагается)

*3 Обязательно подключайте штекеры к соответствующим аудиогнездам того же цвета на аппарате. При подключении дополнительного проигрывателя CD/MD нельзя использовать разъем AUX IN.
*4 Дополнительное вспомогательное оборудование, например портативный проигрыватель DVD (не прилагается)
*5 Поставляется со вспомогательным оборудованием
*6 Поставляется с XA-C30
*7 Вставляется проводом вверх

Connection diagram 3

Ⓐ To AMP REMOTE IN of an optional power amplifier
This connection is only for amplifiers. Connecting any other system may damage the unit.

Ⓑ To the interface cable of a car telephone

Warning

If you have a power aerial without a relay box, connecting this unit with the supplied power connecting lead ③ may damage the aerial.

Notes on the control and power supply leads
- *The power aerial control lead (blue) supplies +12 V DC when you turn on the tuner.*
- *When your car has built-in FM/AM aerial in the rear/side glass, connect the power aerial control lead (blue) or the accessory power input lead (red) to the power terminal of the existing aerial booster. For details, consult your dealer.*
- *A power aerial without a relay box cannot be used with this unit.*

Memory hold connection
When the yellow power input lead is connected, power will always be supplied to the memory circuit even when the ignition switch is turned off.

Notes on speaker connection
- *Before connecting the speakers, turn the unit off.*
- *Use speakers with an impedance of 4 to 8 ohms, and with adequate power handling capacities to avoid its damage.*
- *Do not connect the speaker terminals to the car chassis, or connect the terminals of the right speakers with those of the left speaker.*
- *Do not connect the earth lead of this unit to the negative (–) terminal of the speaker.*
- *Do not attempt to connect the speakers in parallel.*
- *Connect only passive speakers. Connecting active speakers (with built-in amplifiers) to the speaker terminals may damage the unit.*
- *To avoid a malfunction, do not use the built-in speaker leads installed in your car if the unit shares a common negative (–) lead for the right and left speakers.*
- *Do not connect the unit's speaker leads to each other.*

Note on connection
If speaker and amplifier are not connected correctly, "Failure" appears in the display. In this case, make sure the speaker and amplifier are connected correctly.

Схема подсоединения 3

Ⓐ Подключение к входу AMP REMOTE IN дополнительного усилителя мощности
Этот вариант подключения используется только для усилителей. Подключение любой другой системы может привести к повреждению аппарата.

Ⓑ К интерфейсному кабелю автомобильного телефона

Предостережение

Если Вы используете антенну с электрическим приводом без релейного блока, подсоединение этого аппарата посредством прилагаемого шнура питания ③ может привести к повреждению антенны.

О проводах управления и питания
- *При включении тюнера по проводу питания приемной антенны (синему) подается напряжение +12 В постоянного тока.*
- *Если на заднем/боковом стекле автомобиля установлена встроенная антенна диапазона FM/AM, подсоедините провод питания приемной антенны (синий) или провод питания аппарата (красный) к клемме питания существующего усилителя антенны. Чтобы получить дополнительные сведения, обратитесь к своему дилеру.*
- *Антенна с электрическим приводом, не снабженная релейным блоком, с этим аппаратом использоваться не может.*

Подсоединение для поддержки памяти
Когда к аппарату подсоединен желтый электрический провод, блок памяти будет постоянно получать питание даже при выключенном зажигании.

Примечания относительно подсоединения громкоговорителей
- *Прежде чем подсоединять громкоговорители, выключите аппарат.*
- *Используйте громкоговорители с полным сопротивлением 4 - 8 Ом, обладающие способностью принимать достаточно мощный сигнал. В противном случае они могут быть повреждены.*
- *Не подсоединяйте контактные гнезда громкоговорителей к шасси автомобиля и не соединяйте гнезда правого громкоговорителя с гнездами левого.*
- *Не подключайте провод заземления аппарата к отрицательному (–) контакту громкоговорителя.*
- *Не пытайтесь подсоединить громкоговорители параллельно.*
- *Подсоединять можно только пассивные громкоговорители. Подсоединение активных громкоговорителей (со встроенным усилителем) к гнездам для громкоговорителей может привести к повреждению аппарата.*
- *Во избежание неправильной работы аппарата не используйте встроенные в автомобиль провода громкоговорителей, если используется общий отрицательный провод (–) для правого и левого громкоговорителей.*
- *Не подсоединяйте друг к другу провода громкоговорителей аппарата.*

Примечание относительно подсоединения
Если громкоговоритель и усилитель подсоединены неправильно, на дисплее отобразится надпись "Failure". В этом случае проверьте правильность подсоединения громкоговорителя и усилителя.

• CDX-GT550

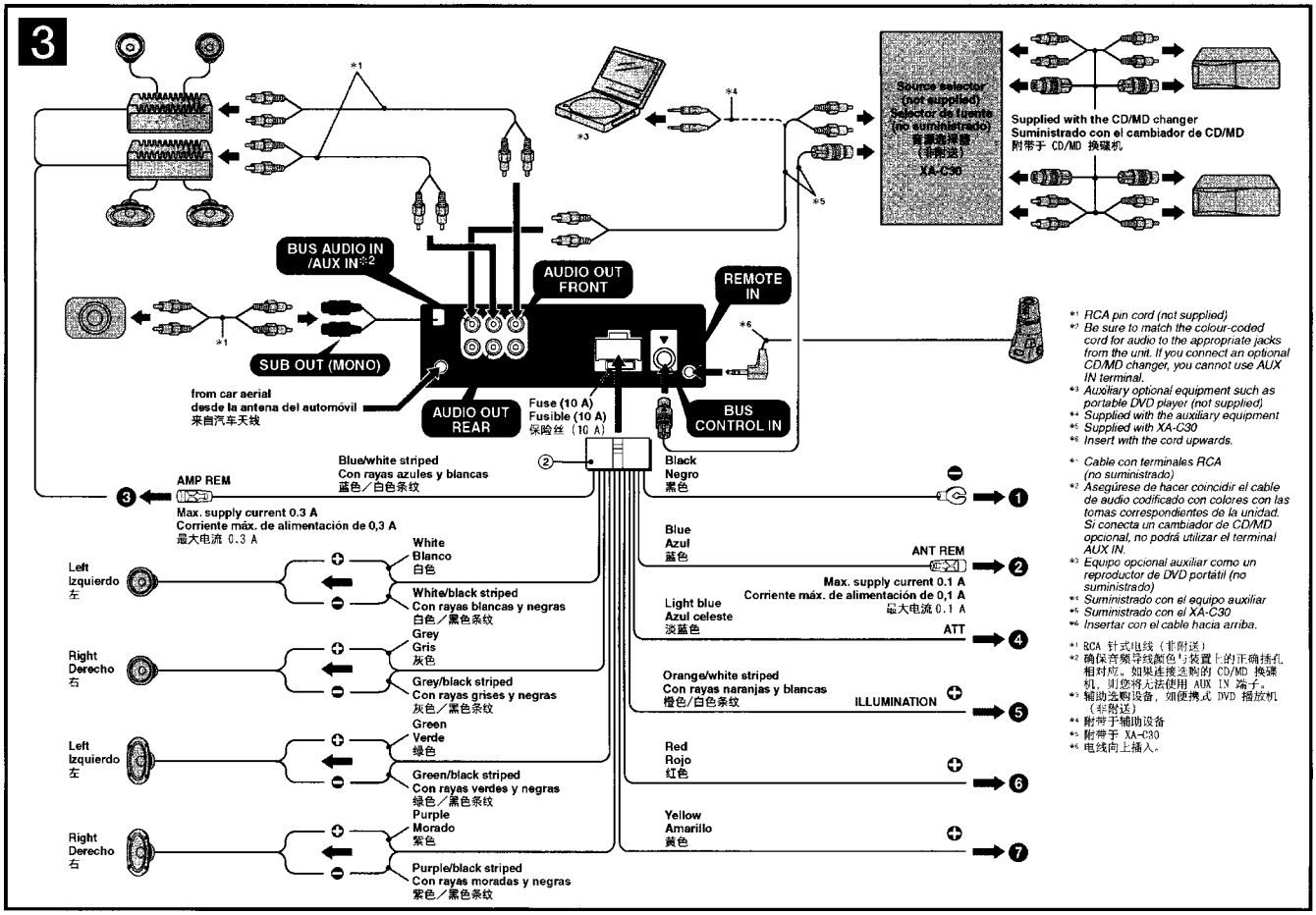

Connection diagram 3

❶ **To a metal surface of the car**
First connect the black earth lead, then connect the orange/white stripped, yellow, and red power input leads.

❷ **To the power aerial control lead or power supply lead of aerial booster amplifier**
Notes
- *It is not necessary to connect this lead if there is no power aerial or aerial booster, or with a manually-operated telescopic aerial.*
- *When your car has a built-in FM/AM aerial in the rear/side glass, see "Notes on the control and power supply leads."*

❸ **To AMP REMOTE IN of an optional power amplifier**
This connection is only for amplifiers. Connecting any other system may damage the unit.

❹ **To the interface cable of a car telephone**

❺ **To a car's illumination signal**
Be sure to connect the black earth lead to a metal surface of the car first.

❻ **To the +12 V power terminal which is energized in the accessory position of the ignition key switch**
Notes
- *If there is no accessory position, connect to the +12 V power (battery) terminal which is energized at all times. Be sure to connect the black earth lead to a metal surface of the car first.*
- *When your car has a built-in FM/AM aerial in the rear/side glass, see "Notes on the control and power supply leads."*

❼ **To the +12 V power terminal which is energized at all times**
Be sure to connect the black earth lead to a metal surface of the car first.

Notes on the control and power supply leads
- *The power aerial control lead (blue) supplies +12 V DC when you turn on the tuner.*
- *When your car has built-in FM/AM aerial in the rear/side glass, connect the power aerial control lead (blue) or the accessory power input lead (red) to the power terminal of the existing aerial booster. For details, consult your dealer.*
- *A power aerial without a relay box cannot be used with this unit.*

Memory hold connection
When the yellow power input lead is connected, power will always be supplied to the memory circuit even when the ignition switch is turned off.

Notes on speaker connection
- *Before connecting the speakers, turn the unit off.*
- *Use speakers with an impedance of 4 to 8 ohms, and with adequate power handling capacities to avoid its damage.*
- *Do not connect the speaker terminals to the car chassis, or connect the terminals of the right speakers with those of the left speaker.*
- *Do not connect the earth lead of this unit to the negative (–) terminal of the speaker.*
- *Do not attempt to connect the speakers in parallel.*
- *Connect only passive speakers. Connecting active speakers (with built-in amplifiers) to the speaker terminals may damage the unit.*
- *To avoid a malfunction, do not use the built-in speaker leads installed in your car if the unit shares a common negative (–) lead for the right and left speakers.*
- *Do not connect the unit's speaker leads to each other.*

Note on connection
If speaker and amplifier are not connected correctly, "Failure" appears in the display. In this case, make sure the speaker and amplifier are connected correctly.

Diagrama de conexión 3

❶ **A una superficie metálica del automóvil**
Conecte primero el cable de conexión a masa negro, y después los cables con rayas naranjas y blancas, amarillo, y rojo de entrada de alimentación.

❷ **Al cable de control de la antena motorizada o al cable de fuente de alimentación del amplificador de señal de la antena**
Notas
- *Si no se dispone de antena motorizada ni de amplificador de antena, o se utiliza una antena telescópica accionada manualmente, no será necesario conectar este cable.*
- *Si el automóvil incorpora una antena de FM/AM en el cristal trasero o lateral, consulte "Notas sobre los cables de control y de fuente de alimentación".*

❸ **A AMP REMOTE IN de un amplificador de potencia opcional**
Esta conexión es sólo para amplificadores. La conexión de cualquier otro sistema puede dañar la unidad.

❹ **Al cable de interfaz de un teléfono para automóvil**

❺ **A una señal de iluminación del automóvil**
Asegúrese de conectar primero el cable de conexión a masa negro a una superficie metálica del automóvil.

❻ **Al terminal de alimentación de +12 V que recibe energía en la posición de accesorio del interruptor de la llave de encendido**
Notas
- *Si no hay posición de accesorio, conéctelo al terminal de alimentación (batería) de +12 V que recibe energía sin interrupción.*
  Asegúrese de conectar primero el cable de conexión a masa negro a una superficie metálica del automóvil.
- *Si el automóvil incorpora una antena de FM/AM en el cristal trasero o lateral, consulte "Notas sobre los cables de control y de fuente de alimentación".*

❼ **Al terminal de alimentación de +12 V que recibe energía sin interrupción**
Asegúrese de conectar primero el cable de conexión a masa negro a una superficie metálica del automóvil.

Notas sobre los cables de control y de fuente de alimentación
- *El cable de control de la antena motorizada (azul) suministrará cc de + 12 V cuando conecte la alimentación del sintonizador.*
- *Si el automóvil dispone de una antena de FM/AM incorporada en el cristal trasero o lateral, conecte el cable de control de antena motorizada (azul) o el cable de entrada de alimentación auxiliar (rojo) al terminal de alimentación del amplificador de antena existente. Para obtener más información, consulte a su distribuidor.*
- *Con esta unidad no es posible utilizar una antena motorizada sin caja de relé.*

Conexión para protección de la memoria
Si conecta el cable de entrada de alimentación amarillo, el circuito de la memoria recibirá siempre alimentación, aunque apague el interruptor de encendido.

Notas sobre la conexión de los altavoces
- *Antes de conectar los altavoces, desconecte la alimentación de la unidad.*
- *Utilice altavoces con una impedancia de 4 a 8 con la capacidad de potencia adecuada para evitar que se dañen.*
- *No conecte los terminales de altavoz al chasis del automóvil, ni conecte los terminales del altavoz derecho con los del izquierdo.*
- *No conecte el cable de conexión a masa de esta unidad al terminal negativo (–) del altavoz.*
- *No intente conectar los altavoces en paralelo.*
- *Conecte solamente altavoces pasivos. Si conecta altavoces activos (con amplificadores incorporados) a los terminales de altavoz, puede dañar la unidad.*
- *Para evitar fallas de funcionamiento, no utilice los cables de altavoz incorporados instalados en el automóvil si la unidad comparte un cable negativo común (–) para los altavoces derecho e izquierdo.*
- *No conecte los cables de altavoz de la unidad entre sí.*

Nota sobre la conexión
Si el altavoz y el amplificador no están conectados correctamente, aparecerá "Failure" en la pantalla. En tal caso compruebe la conexión de ambos dispositivos.

线路连接图 3

❶ **至汽车金属表面**
首先连接黑色接地导线，然后连接橙色/白色条纹、黄色以及红色电源输入导线。

❷ **至电动天线控制导线或天线升缩放大器的电源导线**
注
- 如果没有电动天线或天线升缩器，或有手动伸缩式天线，则无需连接此导线。
- 若汽车的前/侧玻璃内有内置 FM/AM 天线，请参阅"关于控制导线和电源导线的注意事项"。

❸ **至选购的功率放大器的 AMP REMOTE IN**
此连接仅适用于功率放大器。连接其它系统可能损坏本机。

❹ **至车载电话接口电缆**

❺ **至汽车照明信号**
必须首先将黑色接地导线连接至汽车的金属表面。

❻ **至 +12 V 电源端子，该端子在点火开关附件位置通电**
注
- 如果没有附件位置，则连接至 +12 V 电源（蓄电池）端子，该端子随时处于通电状态。
  请保首先将黑色接地导线连接至汽车金属表面。
- 若汽车的前/侧玻璃内有内置 FM/AM 天线，请参阅"关于控制导线和电源导线的注意事项"。

❼ **至 +12 V 电源端子，该端子随时处于通电状态**
确保首先将黑色接地导线连接至汽车金属表面。

关于控制导线和电源导线的注意事项
- 打开调谐器电源时，电动天线的控制导线（蓝色）便能提供 +12 V 直流电。
- 当汽车的前/侧玻璃窗上有内置 FM/AM 天线时，请将电动天线控制线（蓝色）或辅助电源输入电线（红色）连接至现有天线升缩器上的电源端子上。详细说明，请与您的经销商联系。
- 本机不能使用不具备继电器盒的电动天线。

保持记忆的线路连接法
当连接了黄色的电源输入电线时，即使点火开关关闭，电源仍将对记忆电路供电。

关于扬声器连接的注意事项
- 连接扬声器之前，请关闭本机电源。
- 请使用阻抗为 4-8 欧姆且具有足够功率处理能力的扬声器，以免损坏。
- 勿将扬声器端子连接到汽车底盘上，或将右扬声器的端子与左扬声器的端子连接。
- 勿将本机的接地线连接到扬声器的负极（–）端子上。
- 扬声器不可并联连接。
- 请仅连接无源扬声器。将有源扬声器（具有内置放大器）连接到扬声器端子可能会损坏本机。
- 若本机使用左、右扬声器的共用负极（–）电线，为了避免故障，切勿使用安装在汽车内的内置扬声器电线。
- 请勿将本机扬声器电线相互连接。

连接的注意事项
如果未正确连接扬声器和放大器，则显示屏上会出现"Failure"。这时，请确认扬声器和放大器是否连接正确。

SECTION 2
DISASSEMBLY

Note : This set can be disassemble according to the following sequence.

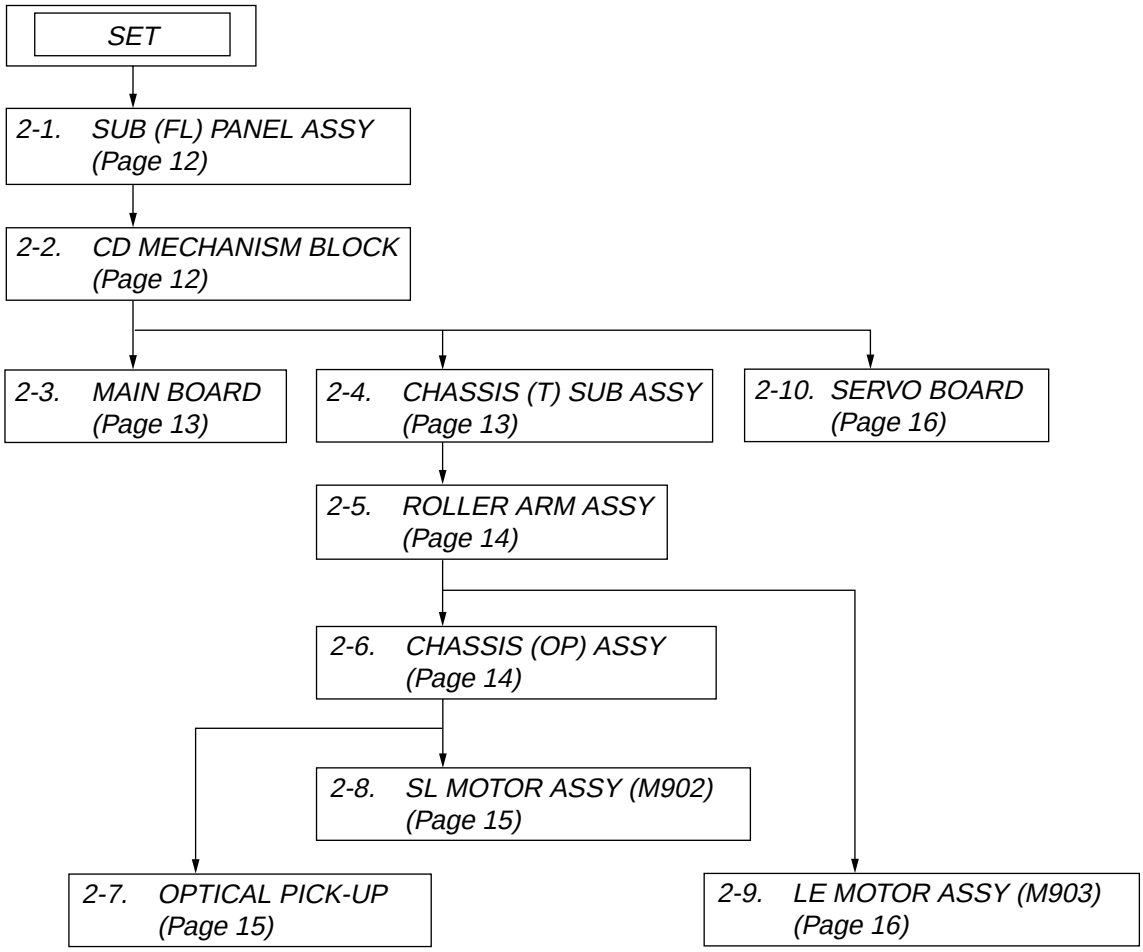

Note : Follow the disassembly procedure in the numerical order given.

2-1. SUB (FL) PANEL ASSY

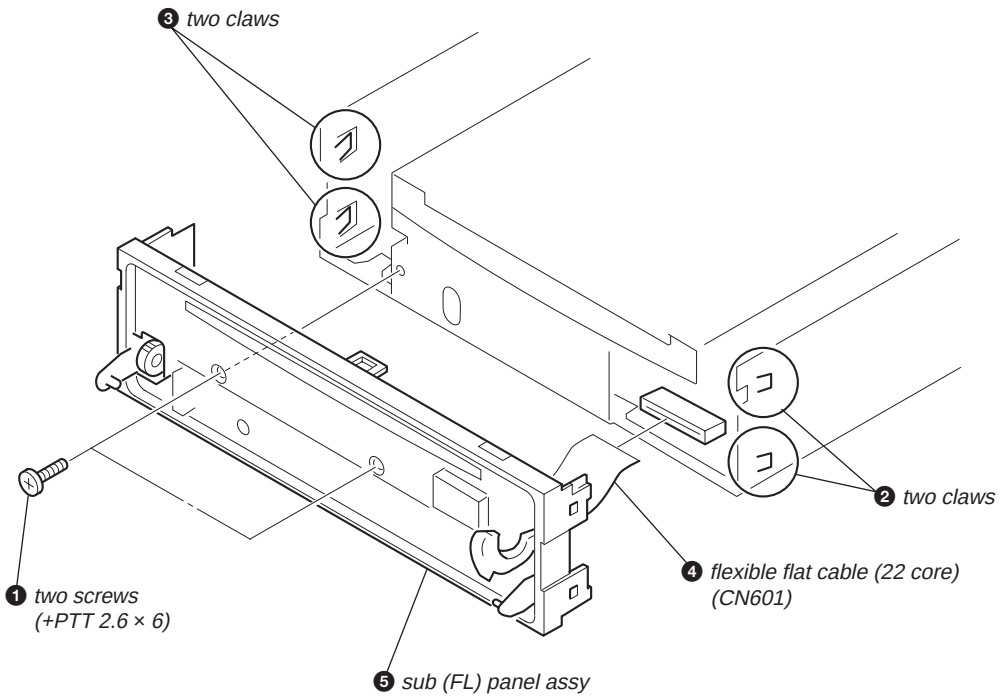

2-2. CD MECHANISM BLOCK

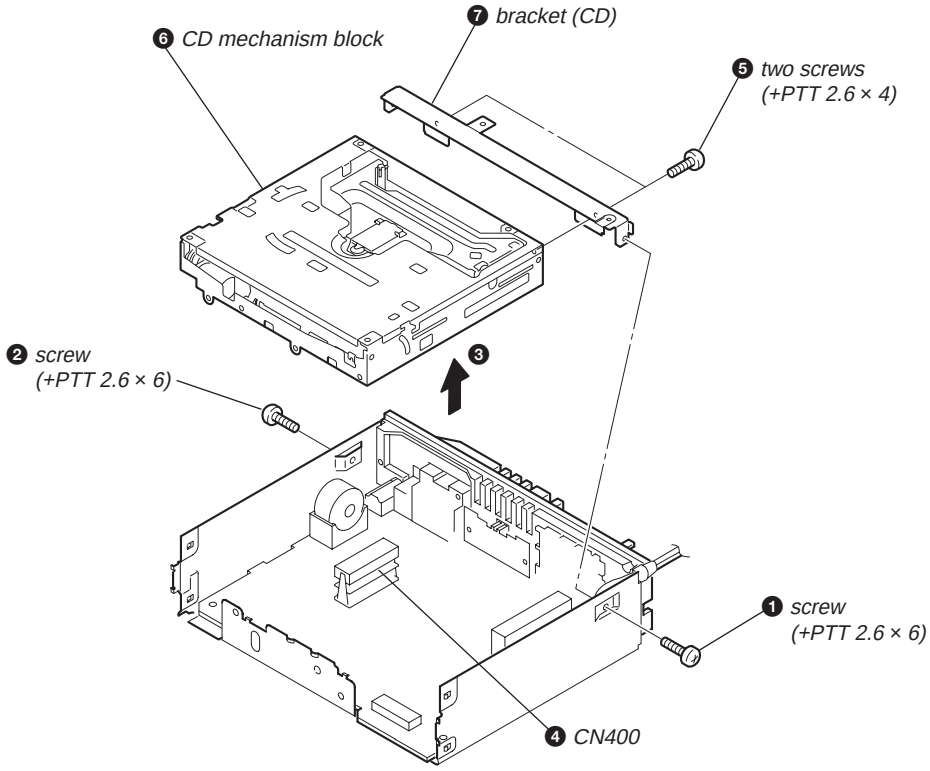

2-3. MAIN BOARD

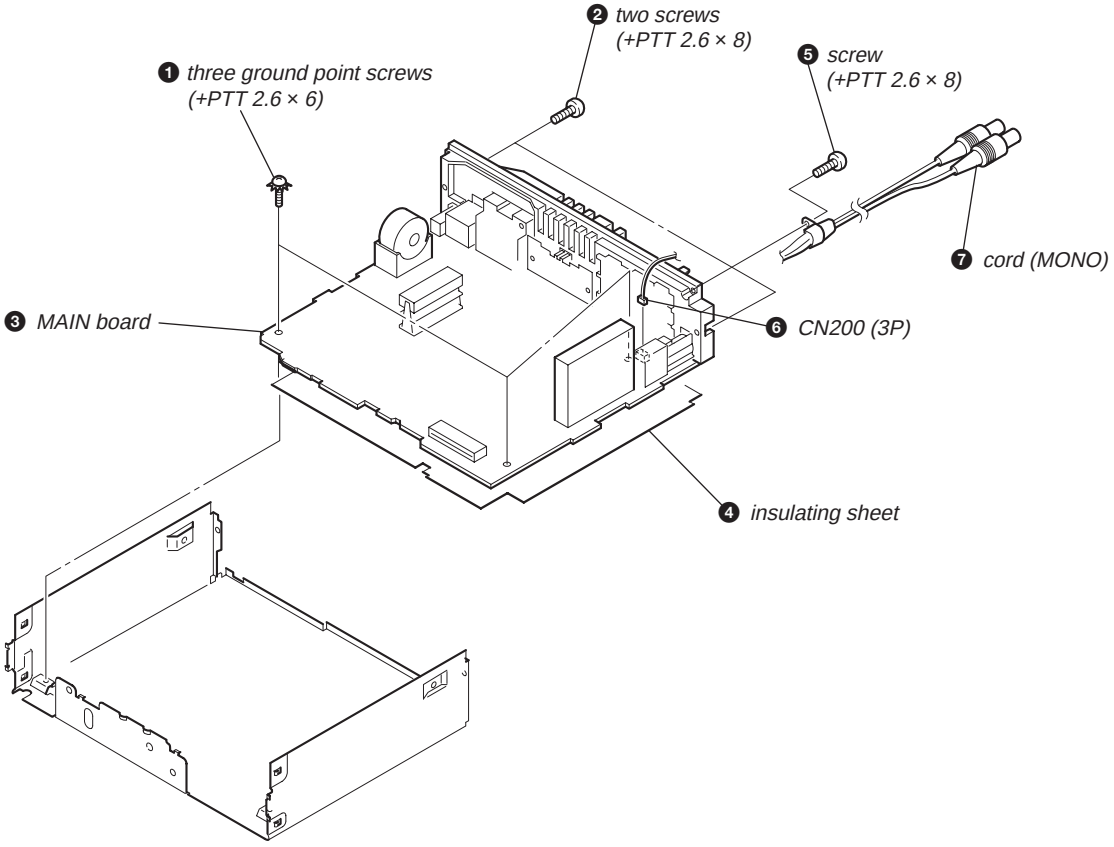

2-4. CHASSIS (T) SUB ASSY

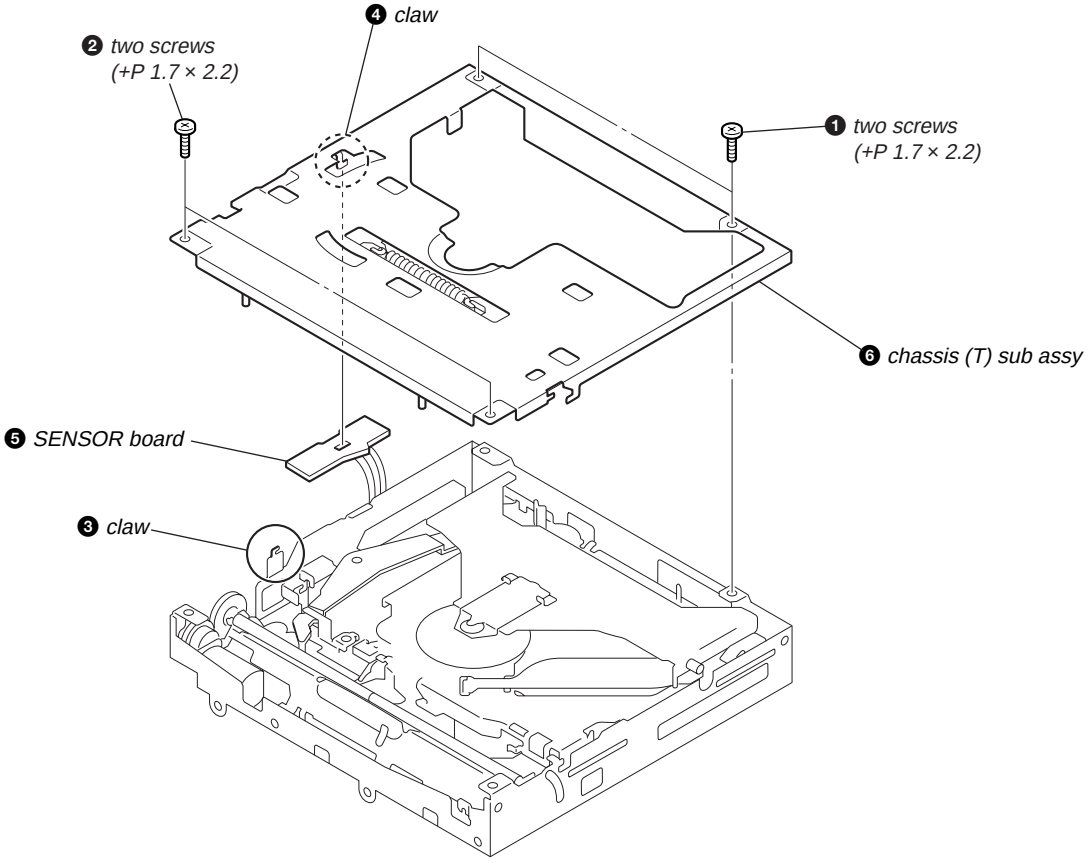

2-5. ROLLER ARM ASSY

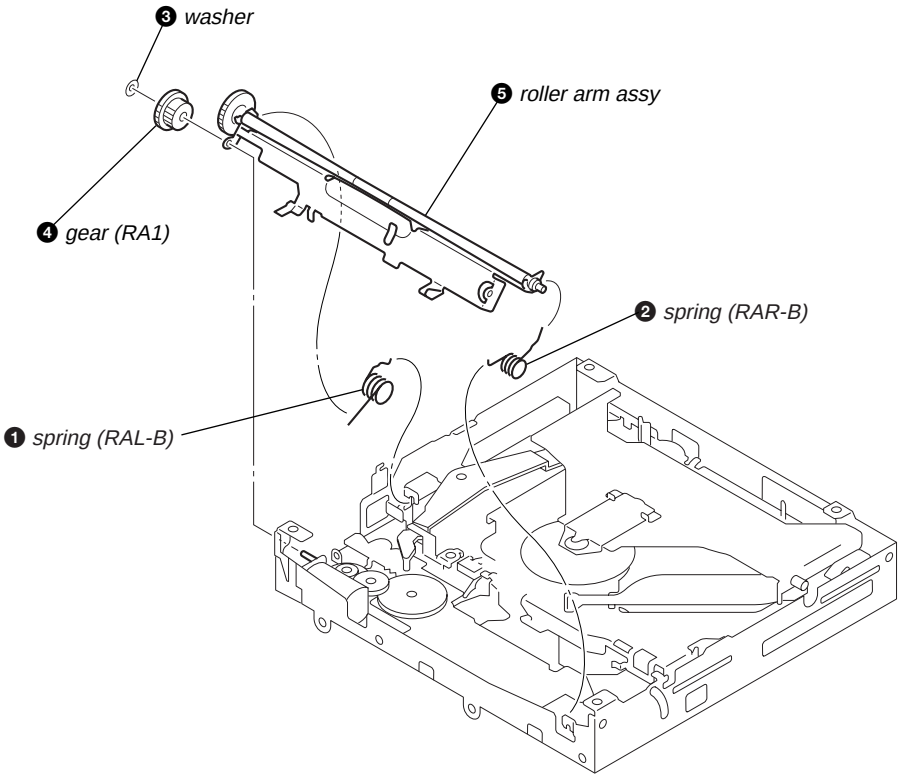

2-6. CHASSIS (OP) ASSY

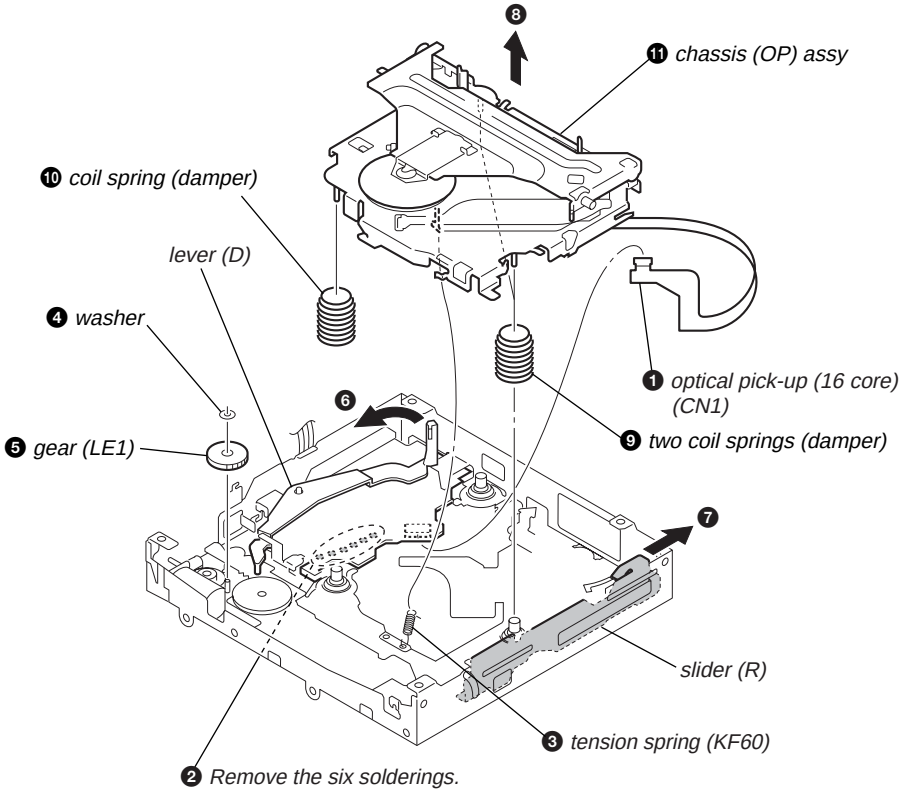

2-7. OPTICAL PICK-UP

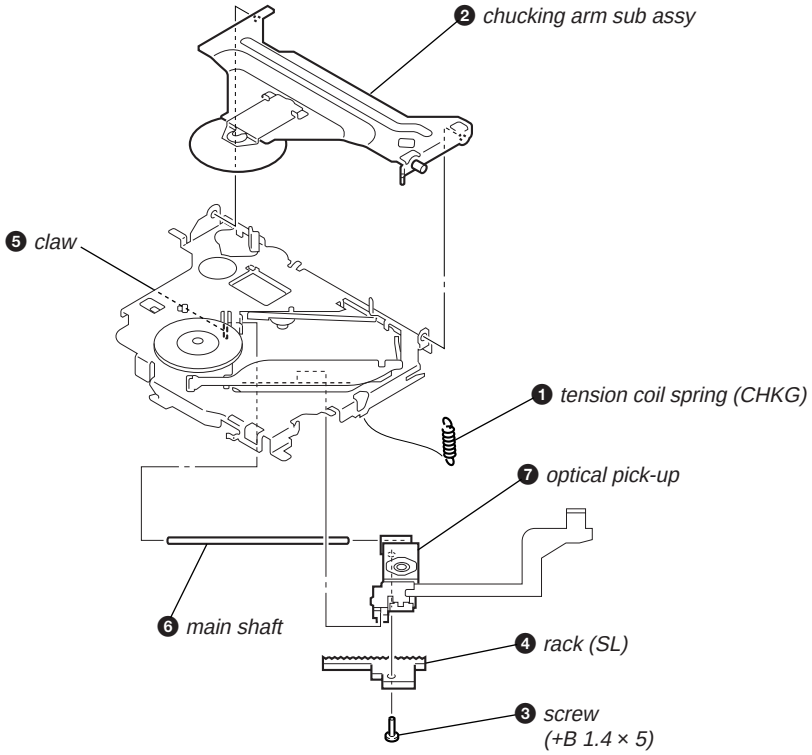

2-8. SL MOTOR ASSY (M902)

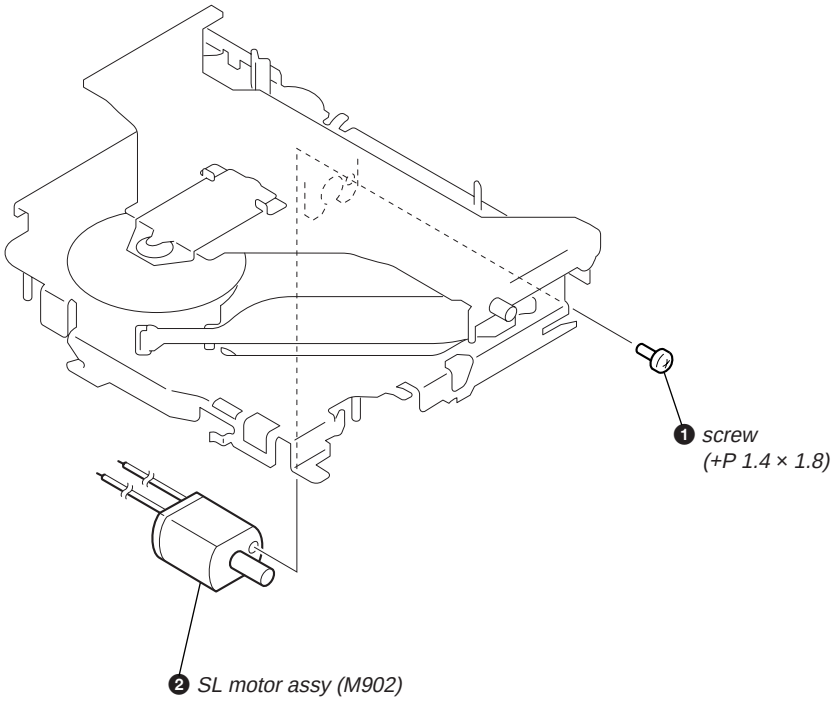

2-9. LE MOTOR ASSY (M903)

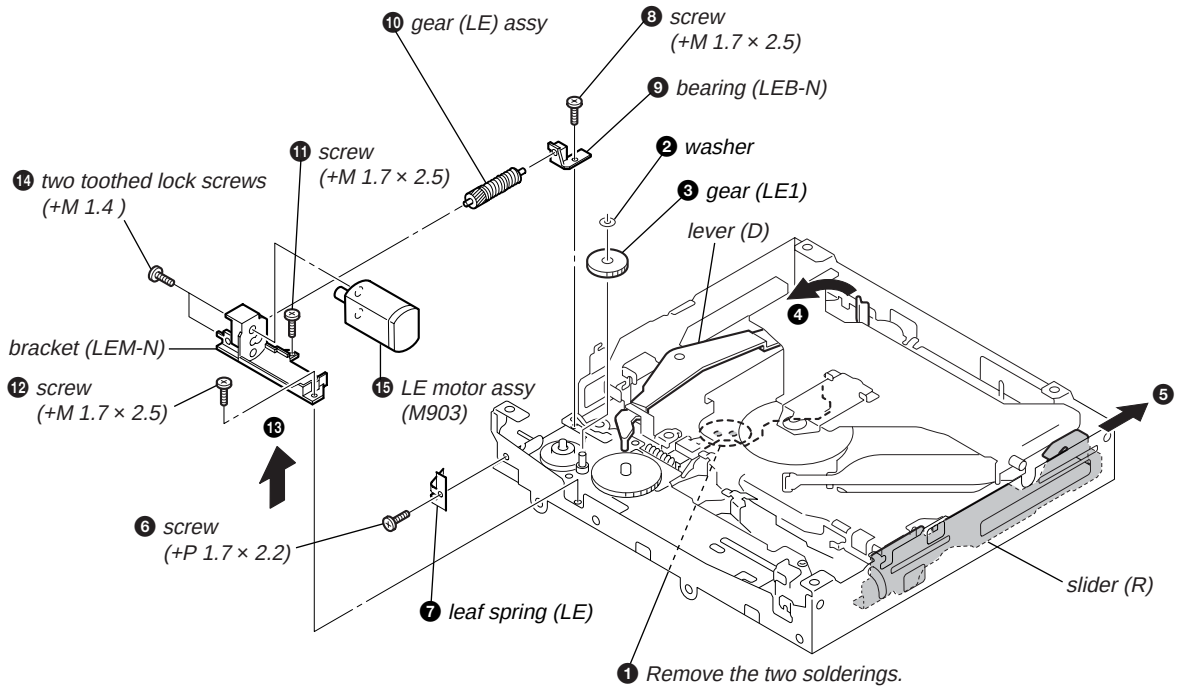

2-10. SERVO BOARD

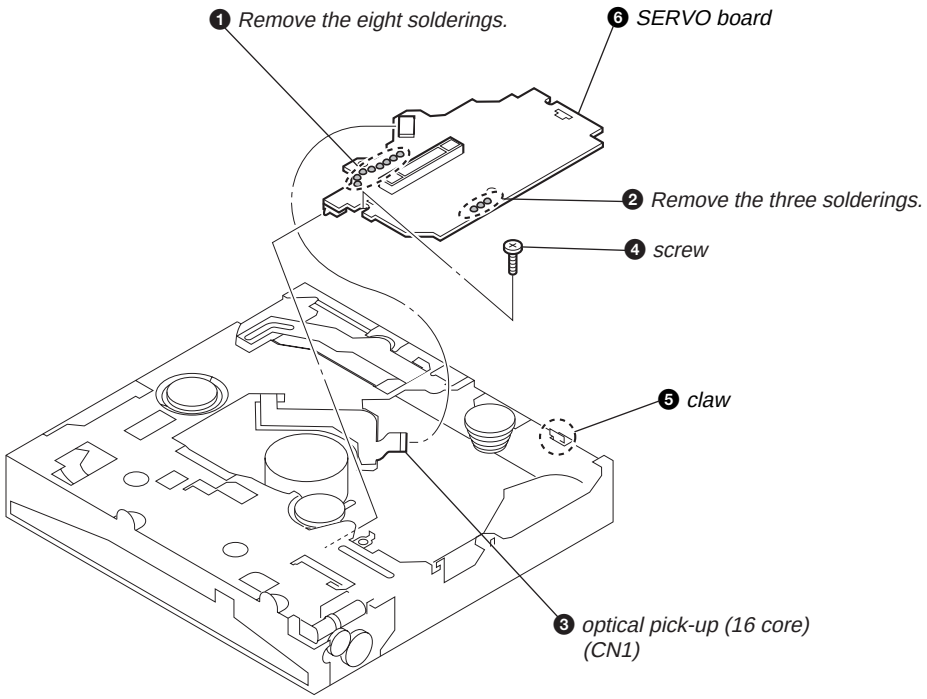

SECTION 3
DIAGRAMS

3-1. BLOCK DIAGRAM — CD SECTION —

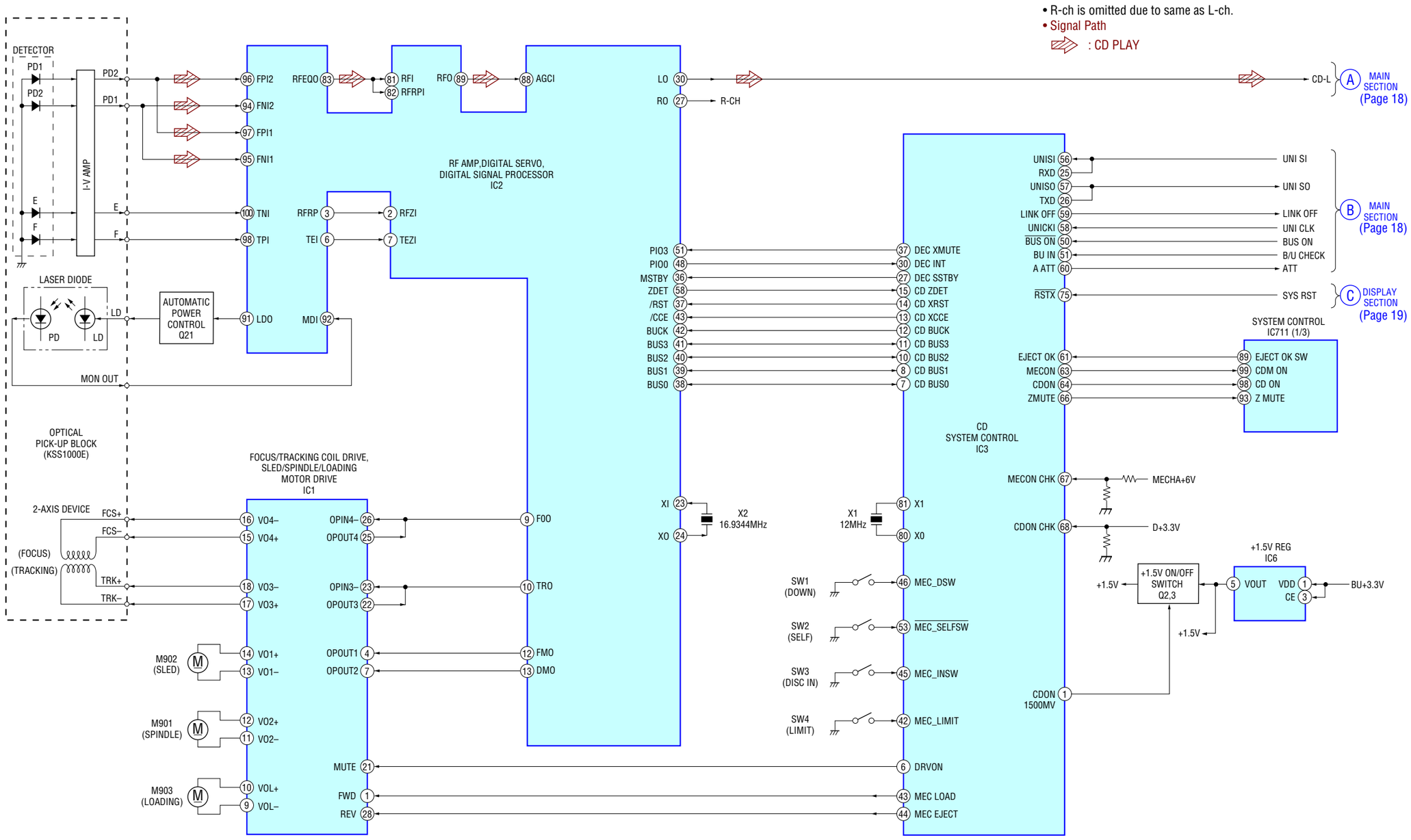

3-2. BLOCK DIAGRAM — MAIN SECTION —

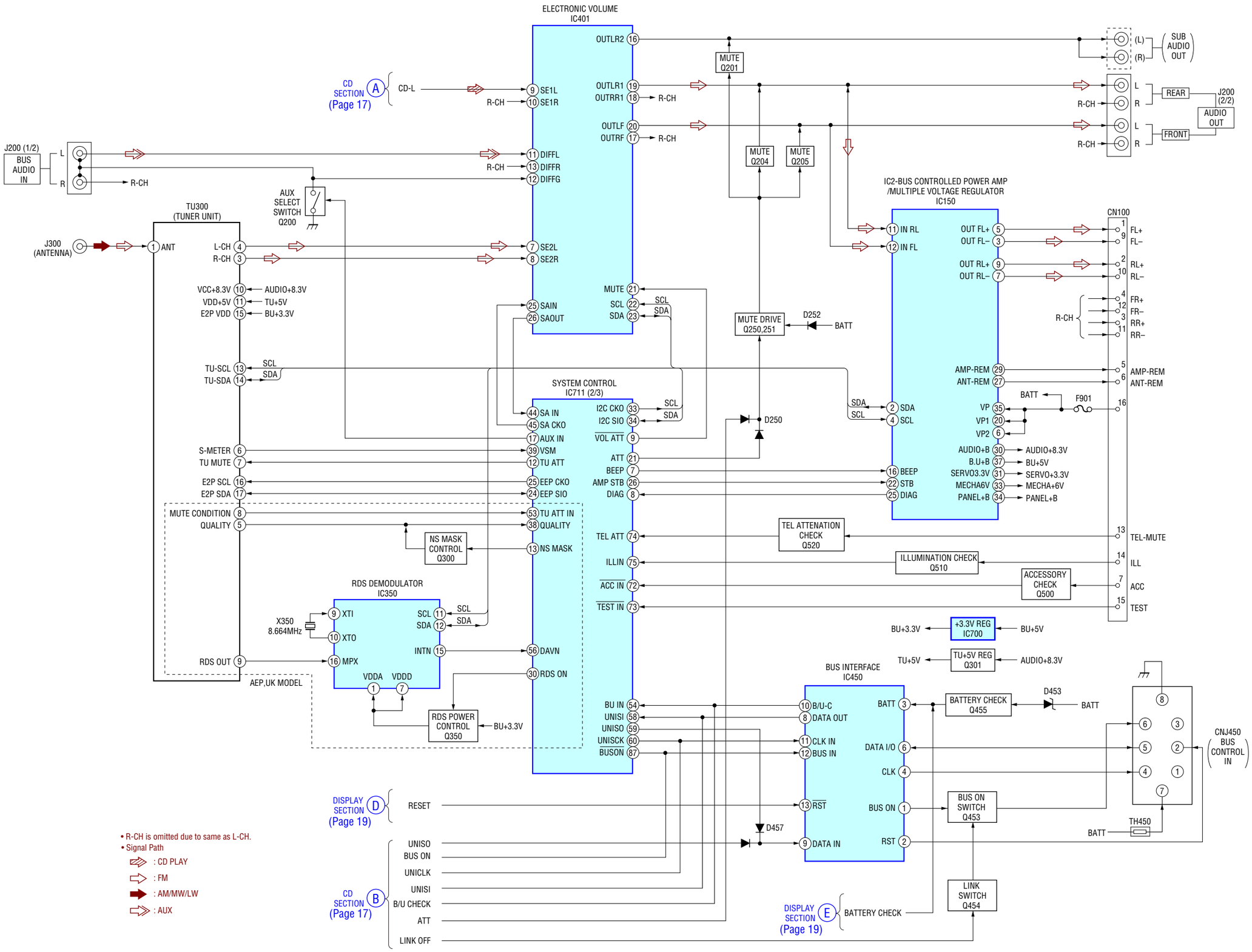

3-3. BLOCK DIAGRAM — DISPLAY SECTION —

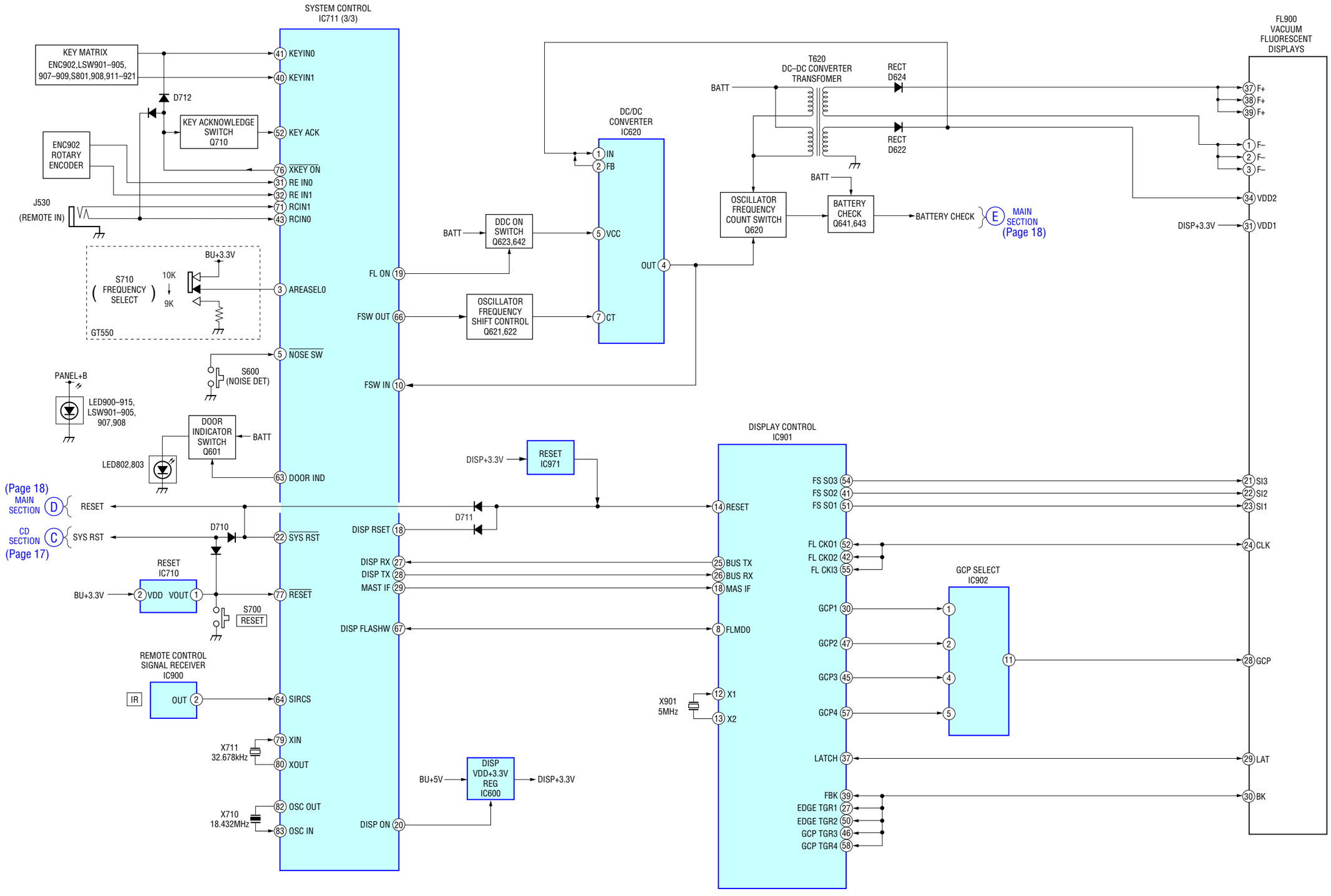

• NOTE FOR PRINTED WIRING BOARDS AND SCHEMATIC DIAGRAMS

THIS NOTE IS COMMON FOR PRINTED WIRING BOARDS AND SCHEMATIC DIAGRAMS.
(In addition to this, the necessary note is printed in each block.)

For schematic diagrams.

Note:
- All capacitors are in µF unless otherwise noted. (p: pF) 50 WV or less are not indicated except for electrolytics and tantalums.
- All resistors are in Ω and 1/4 W or less unless otherwise specified.
- △ : internal component.
- ▭ : panel designation.

Note:	**Note:**
The components identified by mark ⚠ or dotted line with mark ⚠ are critical for safety. Replace only with part number specified.	Les composants identifiés par une marque ⚠ sont critiques pour la sécurité. Ne les remplacer que par une piéce portant le numéro spécifié.

- ▬ : B+ Line.
- ▬ ▬ : B– Line.
- ▭ : adjustment for repair.
- Voltages and waveforms are dc with respect to ground under no-signal (detuned) conditions.
- CD mechanism (1/2) and (2/2) sections
  no mark : CD PLAY
- Main (1/3), (2/3), (3/3), Sub and Display sections
  no mark : FM
  ( ) : AM/MW/LW
  < > : CD PLAY
  * : Impossible to measure
- Voltages are taken with a VOM (Input impedance 10 MΩ). Voltage variations may be noted due to normal production tolerances.
- Waveforms are taken with a oscilloscope. Voltage variations may be noted due to normal production tolerances.
- Circled numbers refer to waveforms.
- Signal path.
  ⇨ : CD PLAY
  ⇨ : FM
  ➡ : AM/MW/LW
  ⇨ : AUX

For printed wiring boards.

Note:
- ○——— : parts extracted from the component side.
- ——— : parts extracted from the conductor side.
- ○ : Through hole.
- ▬ : Pattern from the side which enables seeing.

(The other layers' patterns are not indicated.)

Caution:	
Pattern face side: (Side B)	Parts on the pattern face side seen from the pattern face are indicated.
Parts face side: (Side A)	Parts on the parts face side seen from the parts face are indicated.

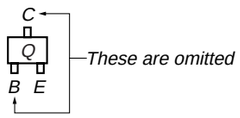

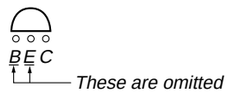

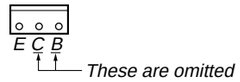

- Abbreviation
  CND : Canadian model
  EE : East European model
  MX : Mexican model
  CH : Chinese model

3-4. CIRCUIT BOARDS LOCATION

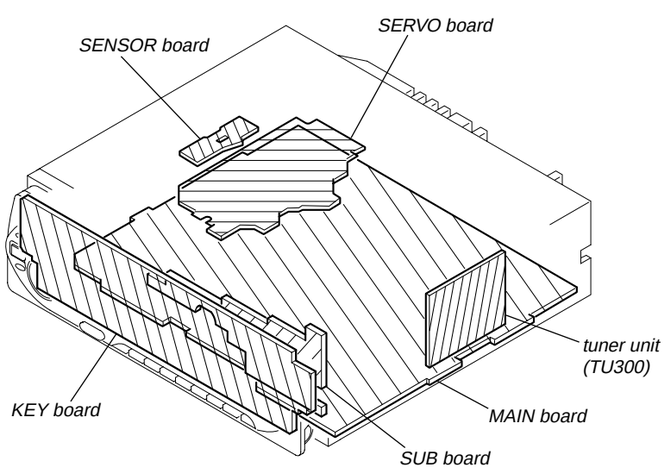

• WAVEFORMS

— SERVO BOARD — (CD PLAY)

① IC2 ⑤ (FEI)

50 mV/DIV, 5 msec/DIV

④ IC2 ⑧① (RFI)

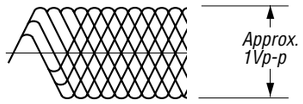

0.5 V/DIV, 0.5 µsec/DIV

⑦ IC3 ⑧① (X1)

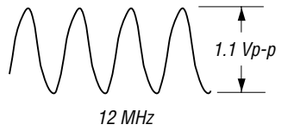

0.5 V/DIV, 0.2 µsec/DIV

② IC2 ⑥ (TEI)

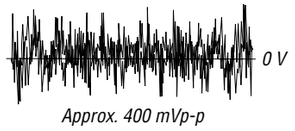

200 mV/DIV, 5 msec/DIV

⑤ IC2 ⑨④ (FNI2), ⑨⑤ (FNI1)

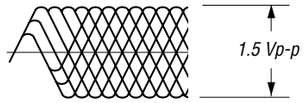

0.5 V/DIV, 0.5 µsec/DIV

③ IC2 ㉓ (XI)

0.2 V/DIV, 0.2 µsec/DIV

⑥ IC2 ⑨⑥ (FPI2), ⑨⑦ (FPI1)

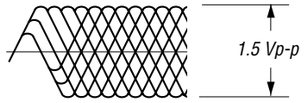

0.5 V/DIV, 0.5 µsec/DIV

— MAIN BOARD —

① IC350 ⑩ (XTO)

0.5 V/DIV, 0.1 µsec/DIV

③ IC711 ⑧② (OSCOUT)

0.5 V/DIV, 0.1 µsec/DIV

② IC711 ⑧⓪ (XOUT)

0.5 V/DIV, 0.1 µsec/DIV

— KEY BOARD —

① IC901 ⑫ (X1)

0.5 V/DIV, 0.1 µsec/DIV

3-5. PRINTED WIRING BOARDS — CD MECHANISM SECTION — • Refer to page 20 for Circuit Boards Location. : Uses unleaded solder.

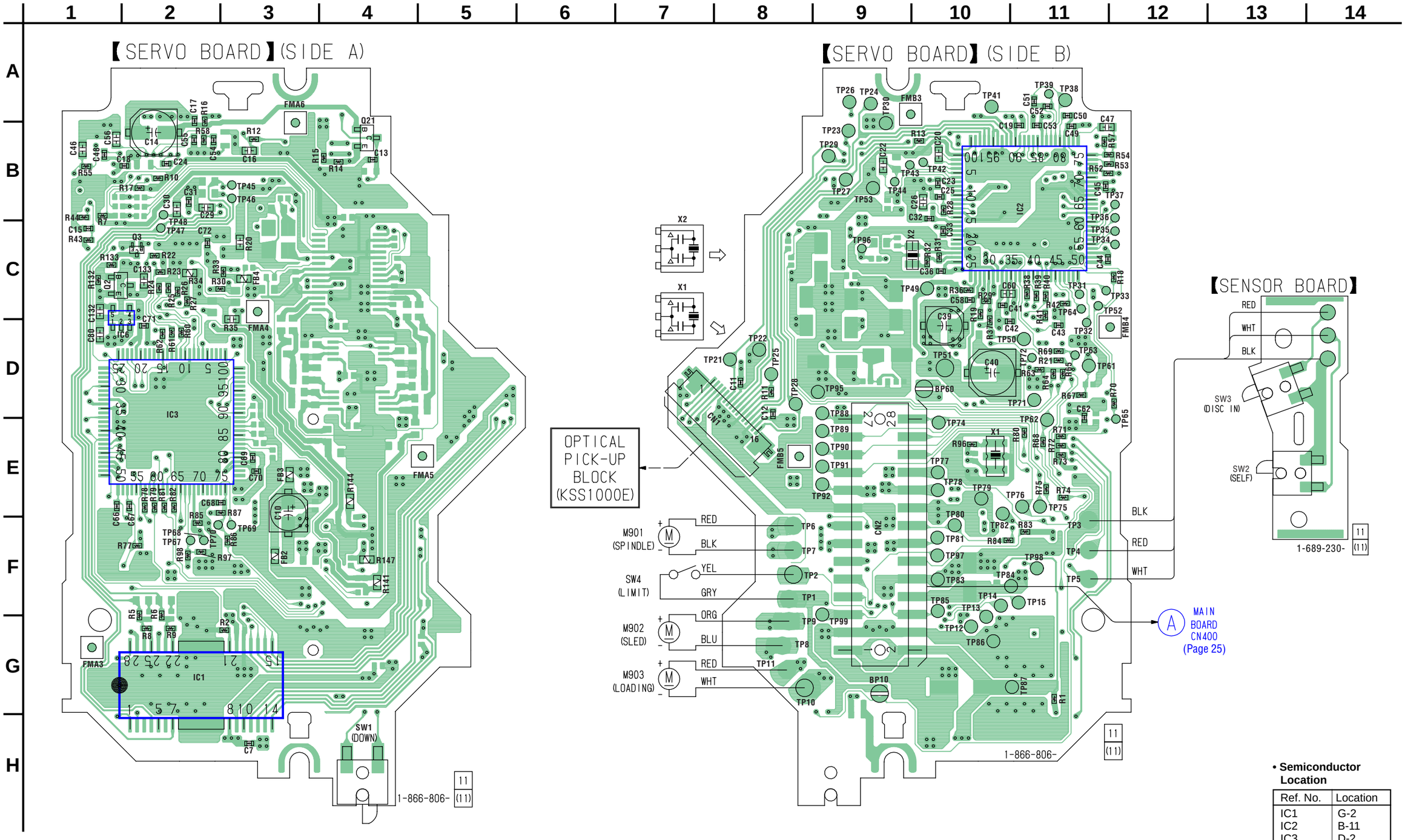

• **Semiconductor Location**

Ref. No.	Location
IC1	G-2
IC2	B-11
IC3	D-2
IC6	D-1
Q2	C-1
Q3	C-2
Q21	B-4

3-6. SCHEMATIC DIAGRAM — CD MECHANISM SECTION (1/2) — • Refer to page 20 for Waveforms.

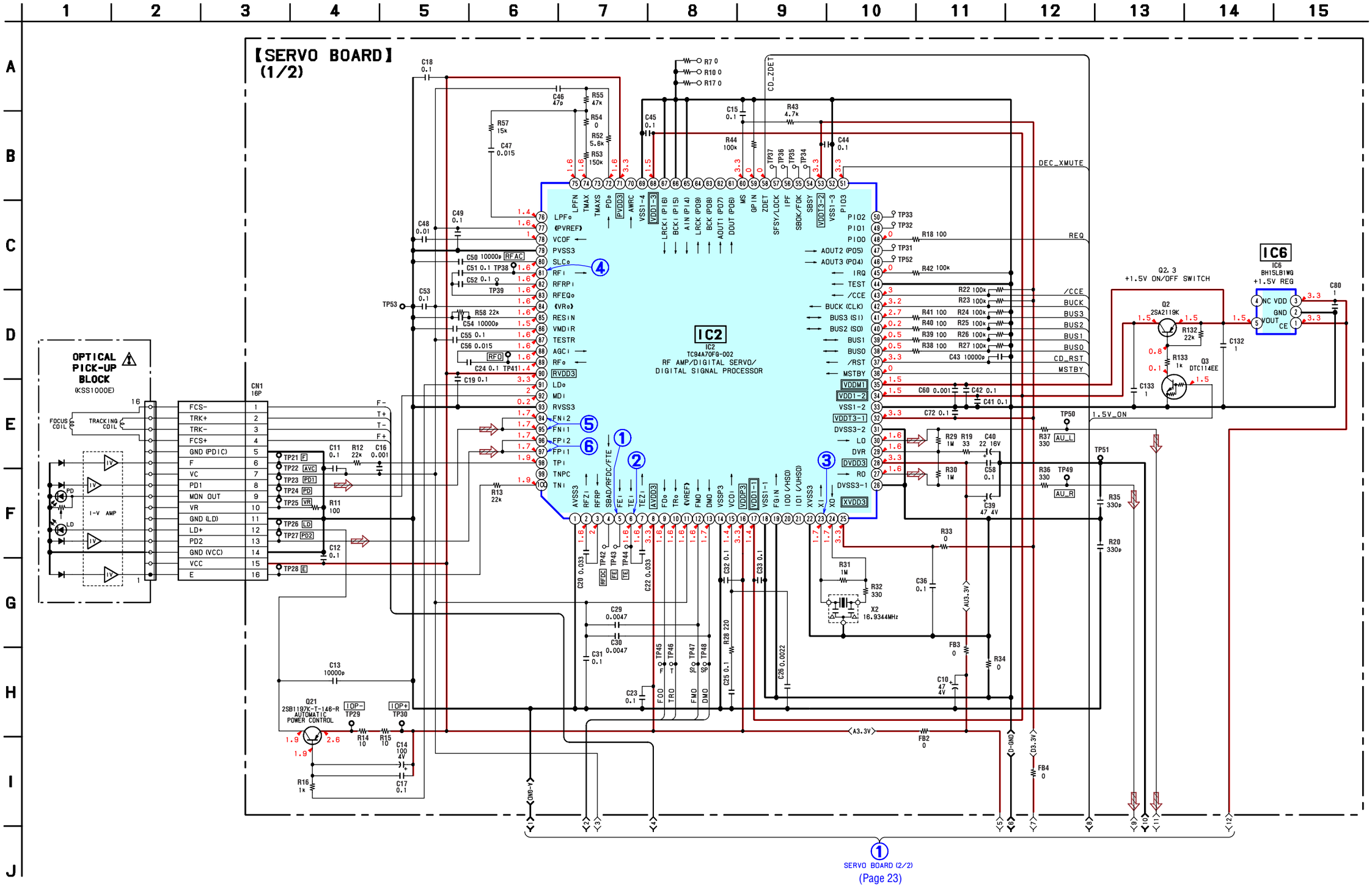

• Refer to page 20 for Waveforms.
• Refer to page 33 for IC Block Diagrams.
• Refer to page 36 for IC Pin Description of IC3.

3-7. SCHEMATIC DIAGRAM — CD MECHANISM SECTION (2/2) —

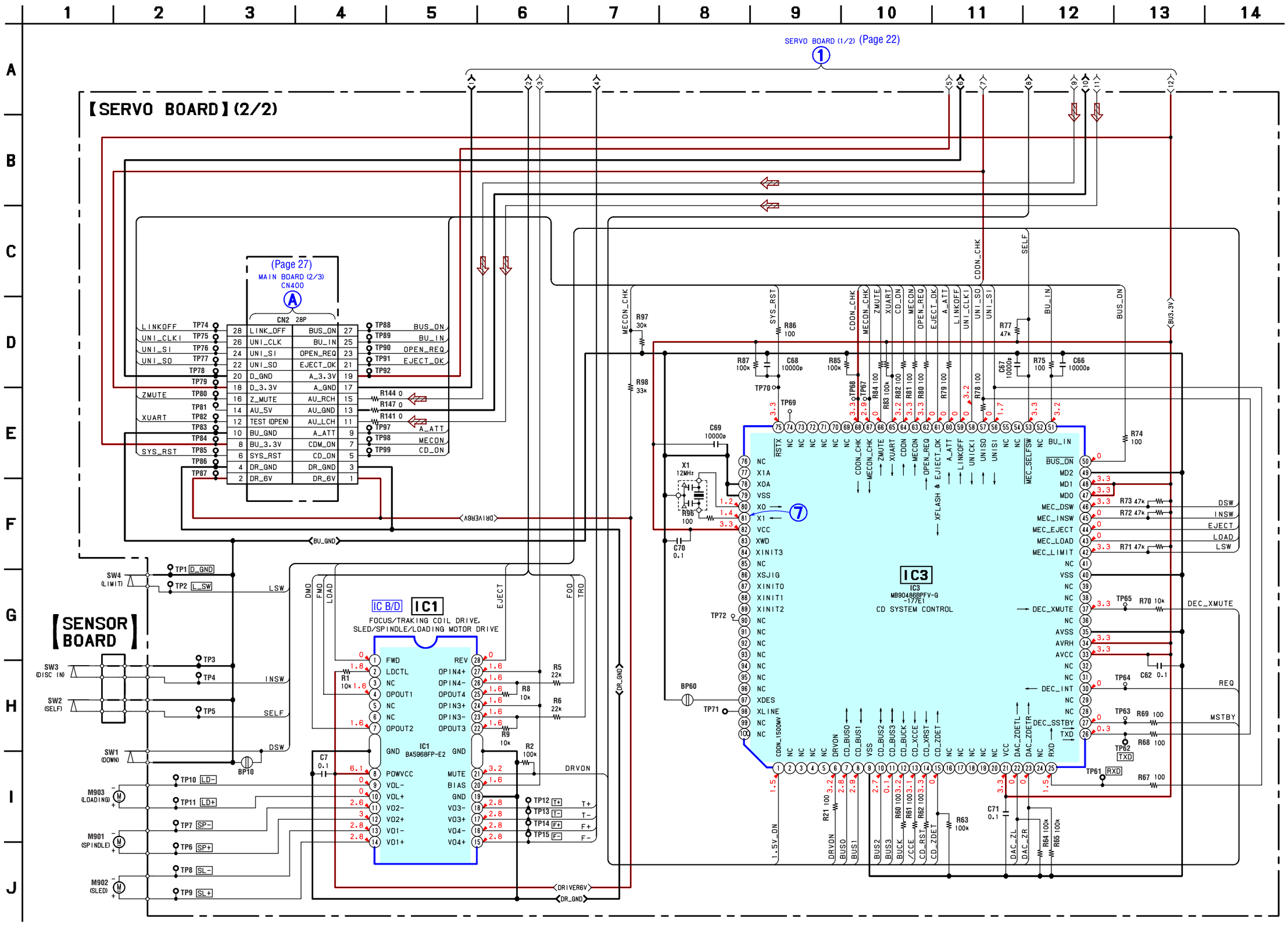

3-8. PRINTED WIRING BOARD — MAIN SECTION — • Refer to page 20 for Circuit Boards Location. : Uses unleaded solder.

• **Semiconductor Location**

Ref. No.	Location	Ref. No.	Location
D100	D-9	D627	F-10
D101	(D-9)	D710	F-7
D102	D-9	D711	I-5
D103	D-8	D712	H-5
D104	D-8	D713	G-5
D105	D-8		
D106	D-8	IC150	(B-6)
D107	(D-7)	IC350	H-2
D108	(C-6)	IC401	E-3
D109	(D-6)	IC450	E-9
D110	(C-6)	IC600	I-5
D111	(C-5)	IC620	G-10
D112	(C-6)	IC700	E-5
D113	(C-7)	IC710	G-7
D114	(C-6)	IC711	H-7
D115	(C-7)		
D116	(C-6)	Q200	C-3
D117	(C-7)	Q201	D-3
D118	(C-7)	Q202	C-4
D200	C-3	Q203	C-4
D250	E-7	Q204	C-3
D252	D-7	Q205	C-4
D300	F-3	Q250	D-7
D450	C-10	Q251	D-7
D452	C-10	Q300	E-2
D453	D-10	Q301	F-3
D454	D-9	Q350	H-3
D455	E-10	Q453	D-10
D456	E-10	Q454	D-9
D457	E-9	Q455	D-9
D510	D-8	Q500	D-8
D610	I-3	Q510	D-8
D611	I-3	Q520	D-8
D612	I-2	Q601	I-5
D613	I-2	Q620	G-10
D614	I-4	Q621	F-11
D616	J-2	Q622	F-10
D620	I-9	Q623	F-10
D621	I-9	Q641	E-10
D622	H-9	Q642	F-10
D624	H-9	Q643	G-9
D625	F-10	Q710	G-5
D626	G-10		

( ): SIDE B

【MAIN BOARD】(SIDE A)

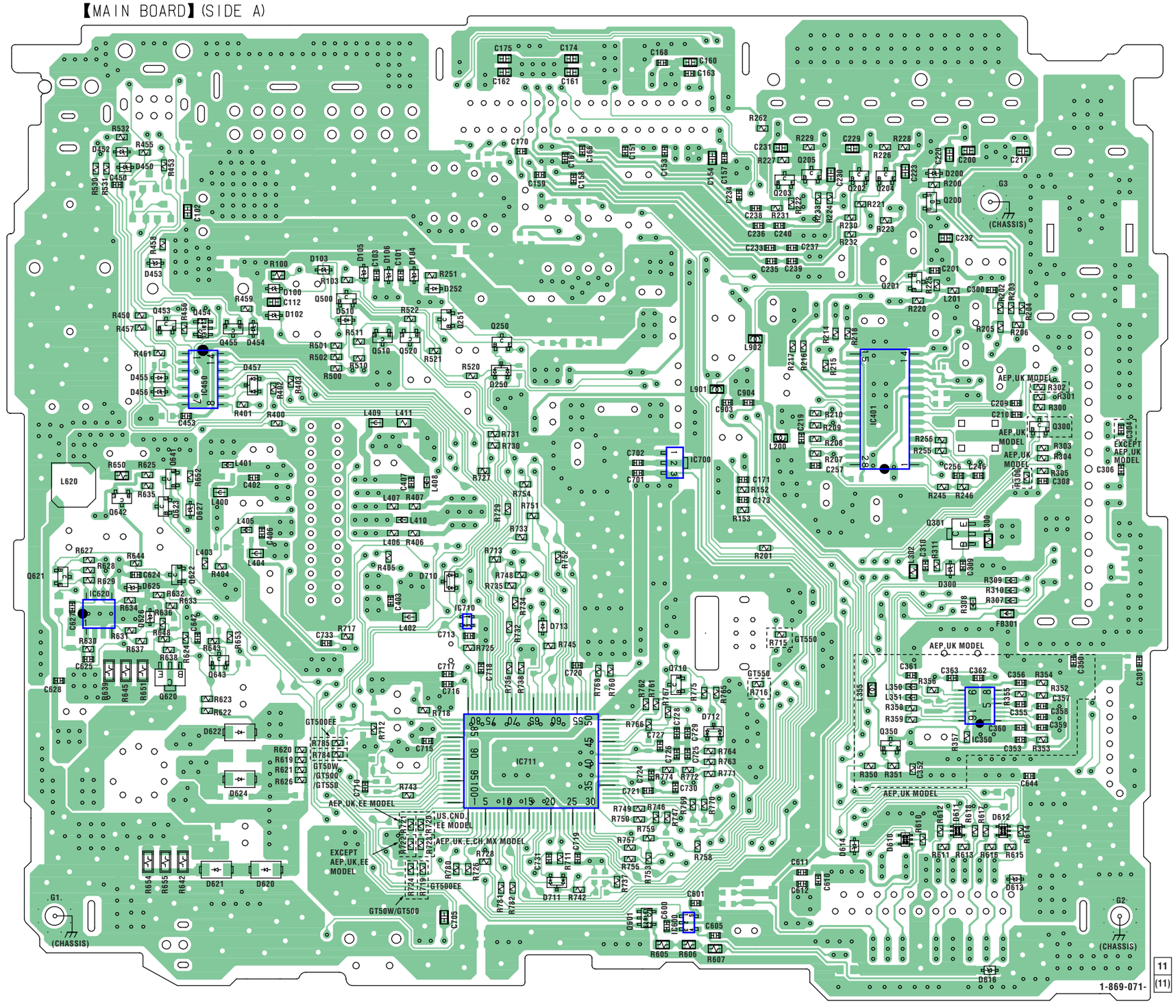

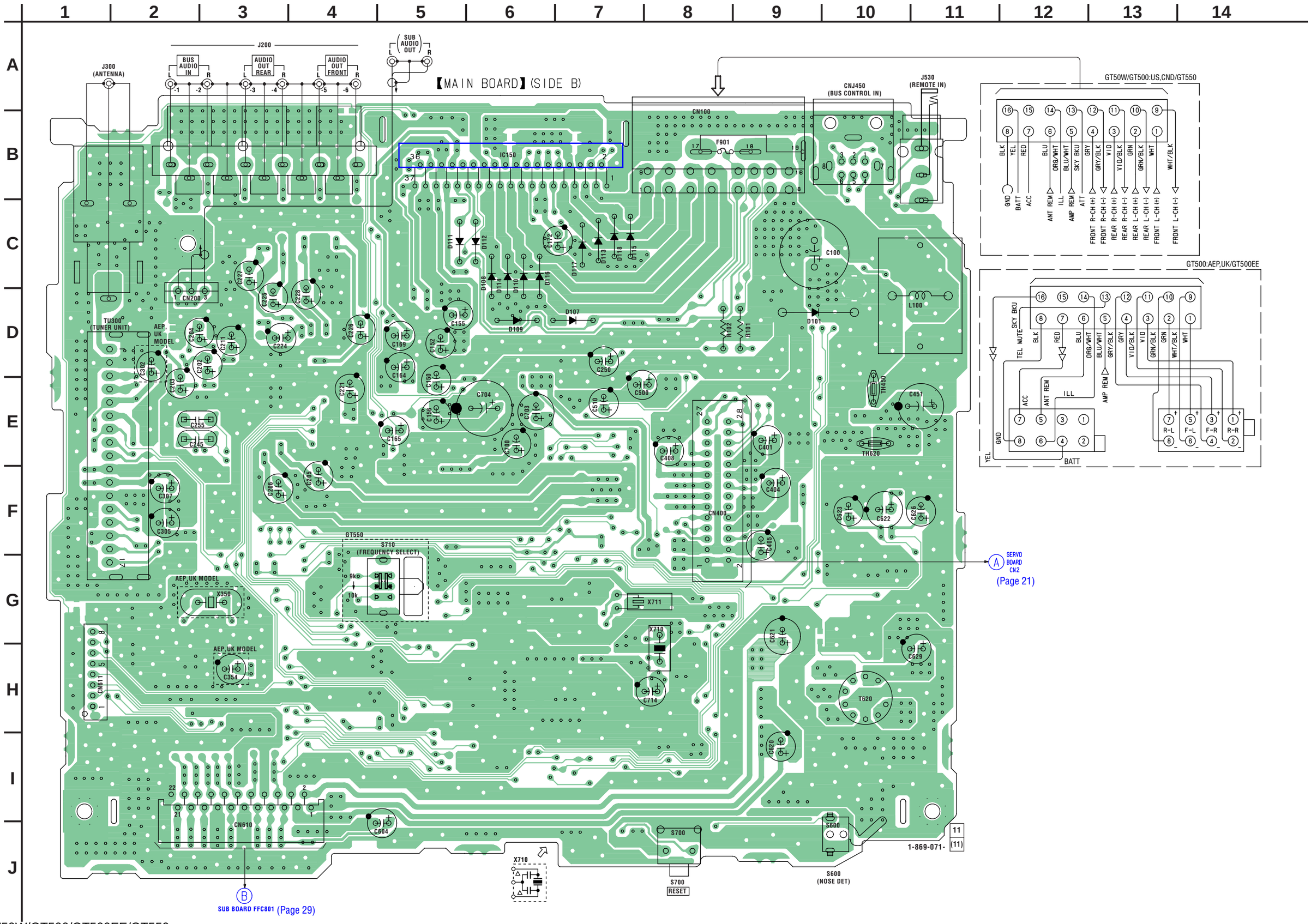
【MAIN BOARD】(SIDE B)
J300 (ANTENNA)
J200
BUS AUDIO IN
AUDIO OUT REAR
AUDIO OUT FRONT
SUB AUDIO OUT
CN100
CNJ450 (BUS CONTROL IN)
J530 (REMOTE IN)
IC150
F901
CN200
TU300 (TUNER UNIT)
AEP, UK MODEL
GT550
S710 (FREQUENCY SELECT)
X350
X711
X710
CN611
CN610
CN400
S700
S700 RESET
S600 (NOSE DET)
SERVO BOARD CN2 (Page 21)
SUB BOARD FFC801 (Page 29)
1-869-071-
GT50W/GT500:US,CND/GT550
GT500:AEP,UK/GT500EE

3-9. SCHEMATIC DIAGRAM — MAIN SECTION (1/3) —

• Refer to page 20 for Waveforms.
• Refer to page 33 for IC Block Diagrams.

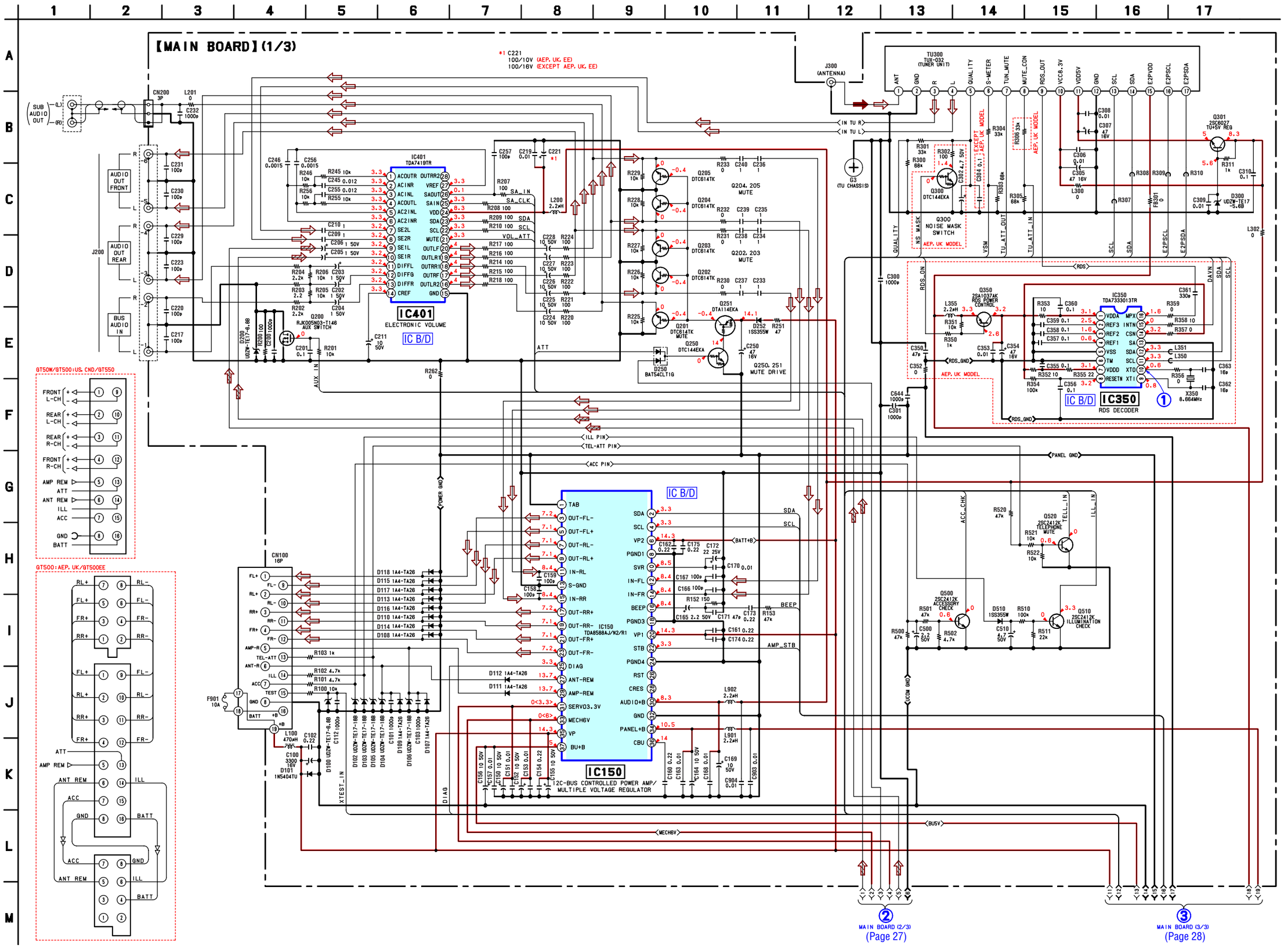

3-10. SCHEMATIC DIAGRAM — MAIN SECTION (2/3) — • Refer to page 34 for IC Block Diagrams.

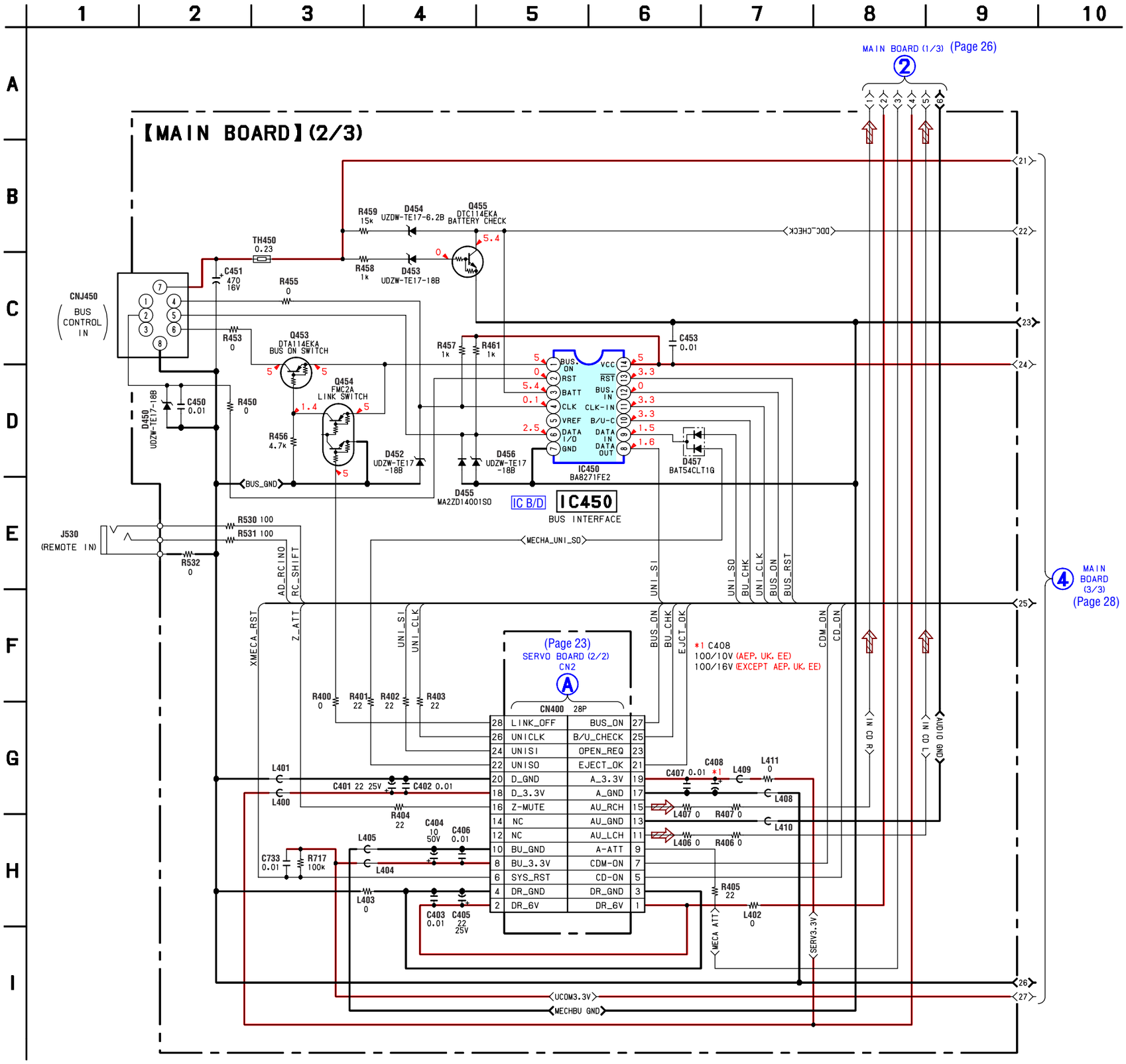

3-11. SCHEMATIC DIAGRAM — MAIN SECTION (3/3) —

- Refer to page 20 for Waveforms.
- Refer to page 38 for IC Pin Description of IC711.

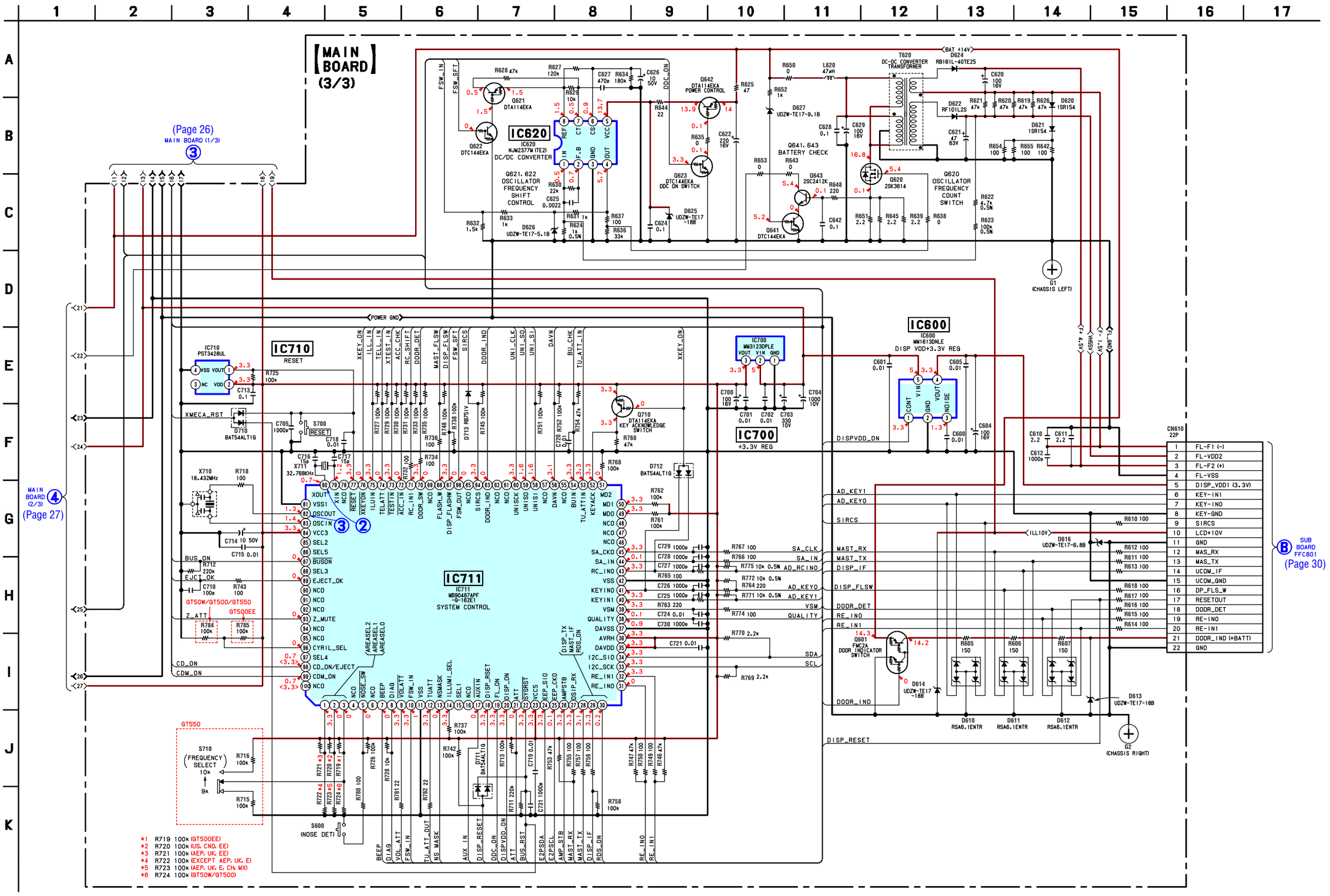

3-12. PRINTED WIRING BOARD — SUB SECTION — • Refer to page 20 for Circuit Boards Location. : Uses unleaded solder.

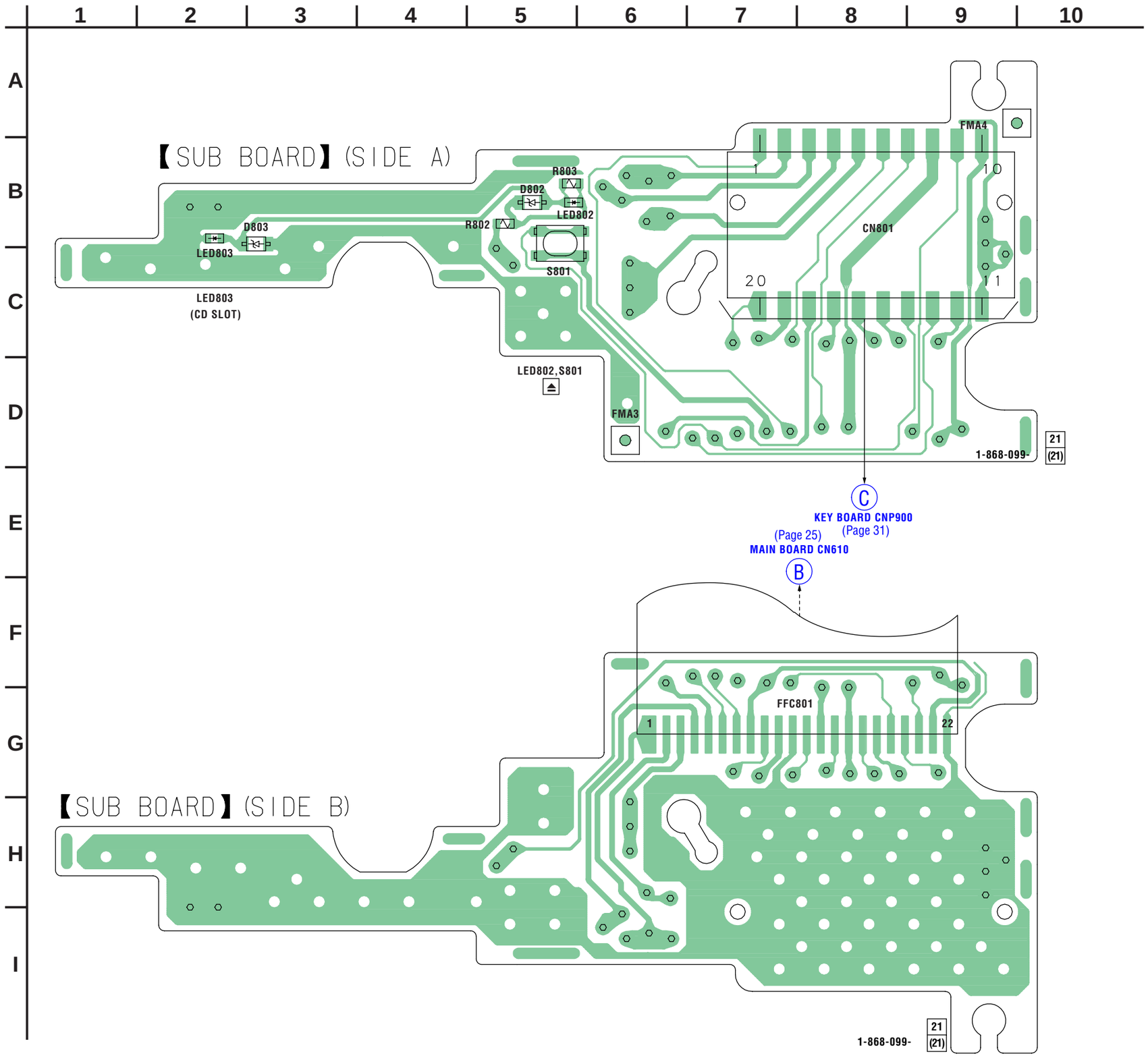

3-13. SCHEMATIC DIAGRAM — SUB SECTION —

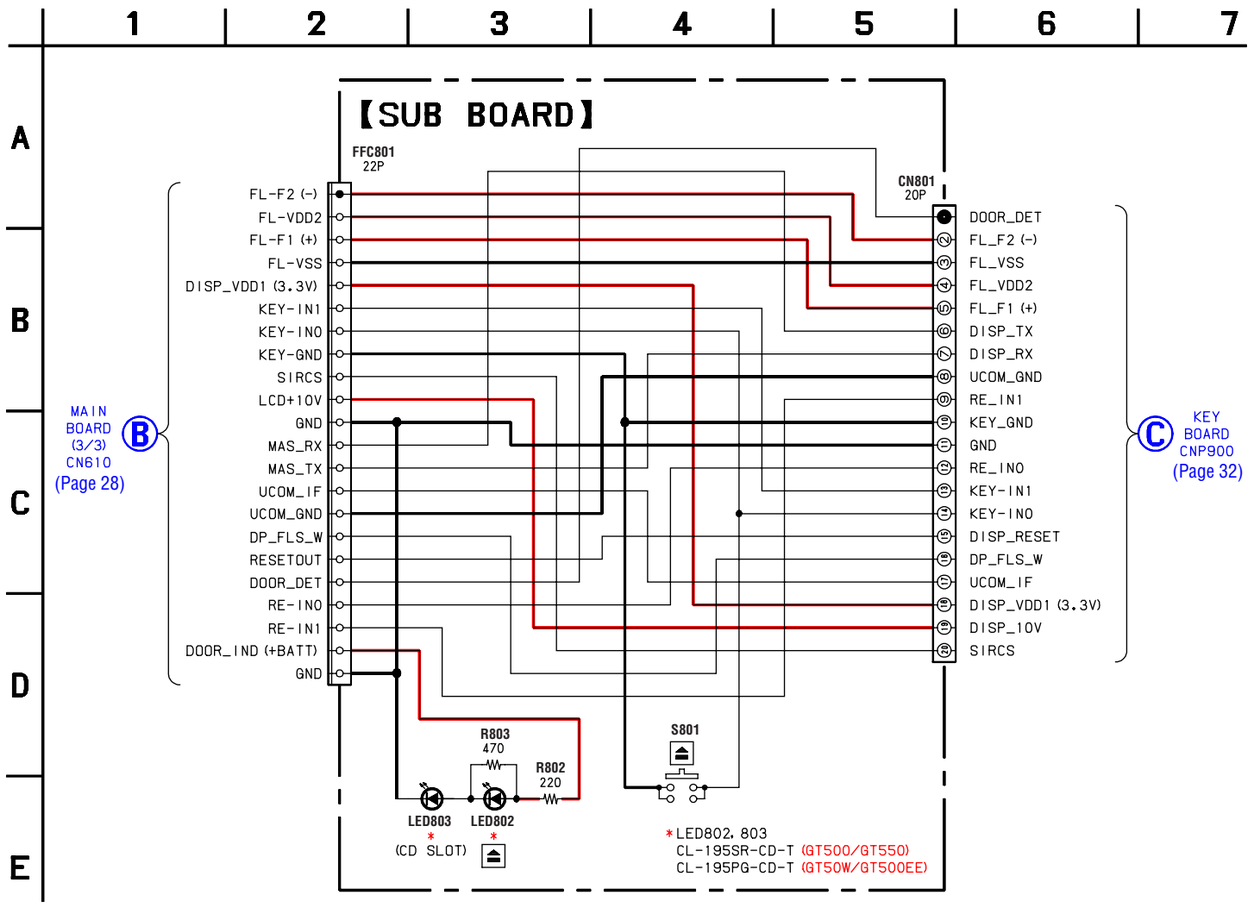

3-14. PRINTED WIRING BOARD — KEY SECTION — • Refer to page 20 for Circuit Boards Location.

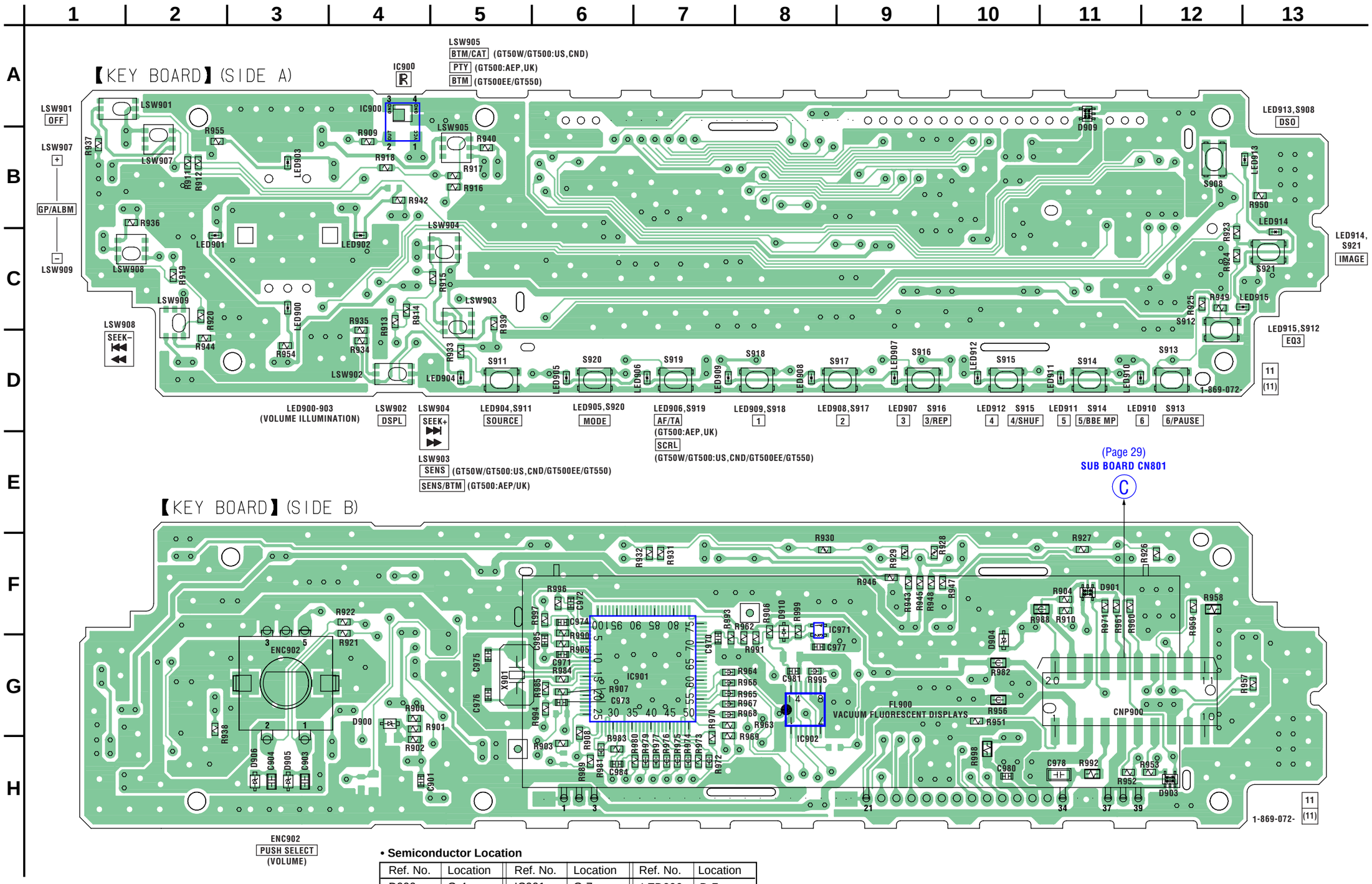

• **Semiconductor Location**

Ref. No.	Location	Ref. No.	Location	Ref. No.	Location
D900	G-4	IC901	G-7	LED906	D-7
D901	F-11	IC902	G-8	LED907	D-9
D903	H-12	IC971	F-8	LED908	D-8
D904	G-10			LED909	D-7
D905	H-3	LED900	C-3	LED910	D-11
D906	H-3	LED901	C-2	LED911	D-11
D909	A-11	LED902	C-4	LED912	D-10
D910	F-8	LED903	B-3	LED913	B-13
		LED904	D-5	LED914	C-13
IC900	A-4	LED905	D-6	LED915	C-13

3-15. SCHEMATIC DIAGRAM — KEY SECTION — • Refer to page 20 for Waveforms.

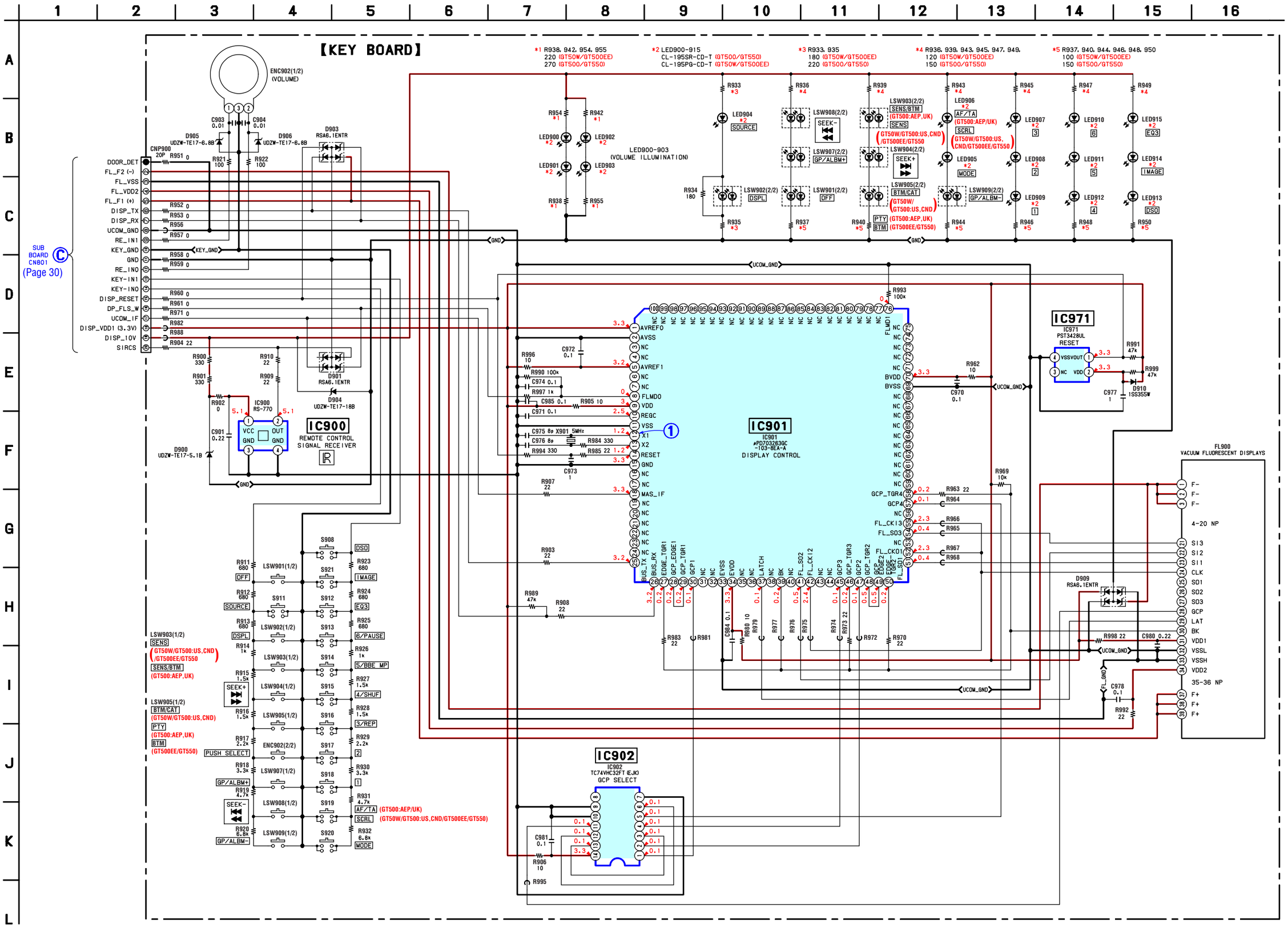

• IC Block Diagrams

IC1 BA5968FP-E2 (SERVO Board (2/2))

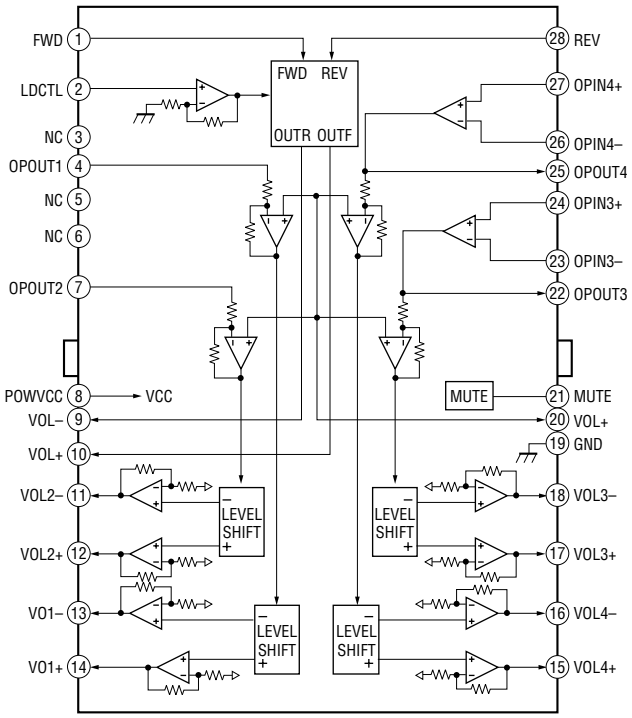

IC350 TDA7333013TR (MAIN Board (1/3))

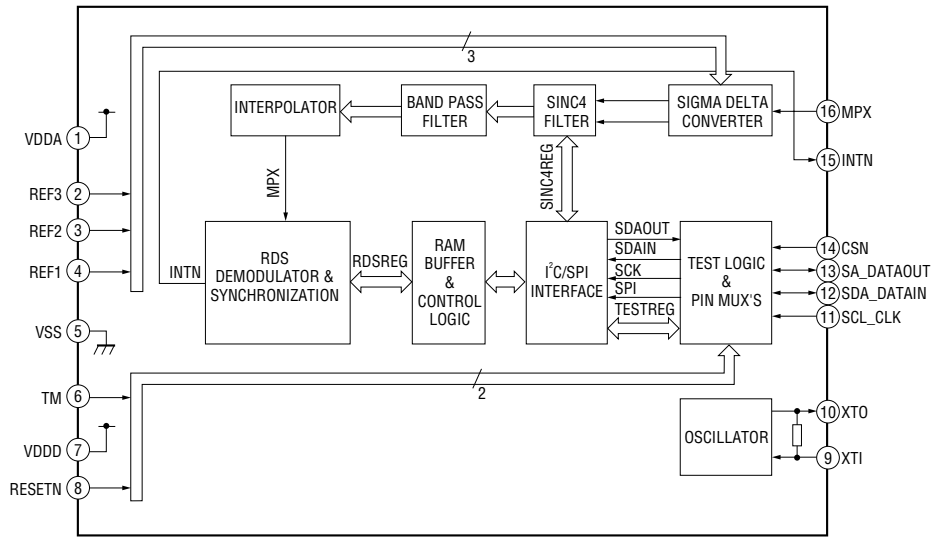

IC150 TDA8588AJ/N2/R1 (MAIN Board (1/3))

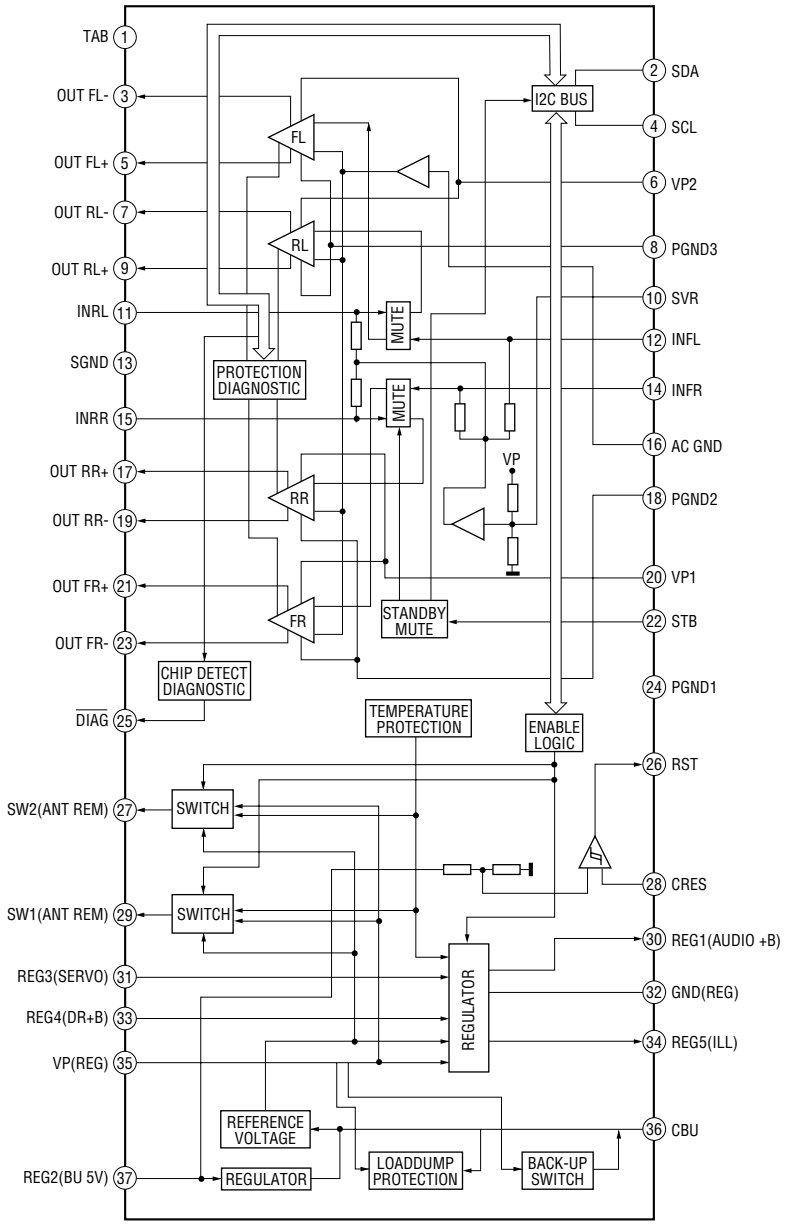

IC450 BA8271F-E2 (MAIN Board (2/3))

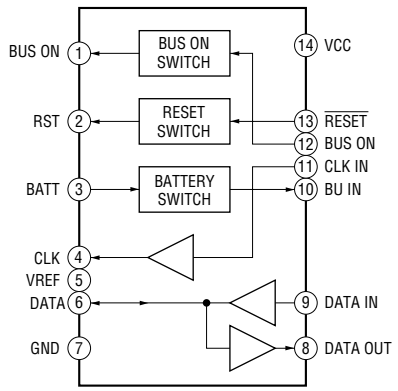

IC401 TDA7419TR (MAIN Board (1/3))

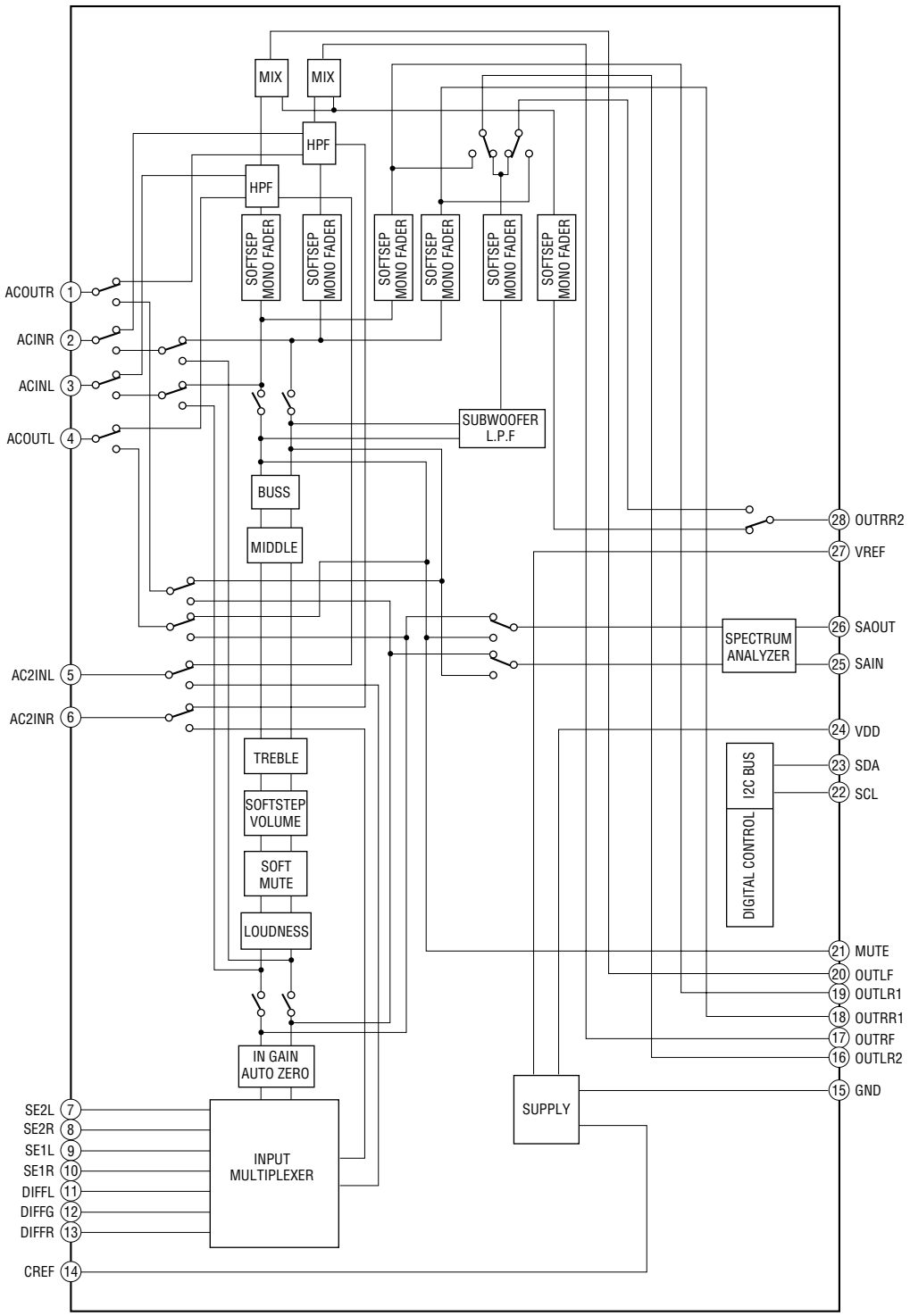

• IC Pin Descriptions

IC3 MB90486BPFV-G-177E1 (CD SYSTEM CONTROL) (SERVO BOARD (2/2))

Pin No.	Pin Name	I/O	Pin Description
1	CDON 1500MV	O	Servo 1.5 V power supply control signal output
2 to 5	NC	—	Not used. (Open)
6	DRVON	O	Motor drive on/off control signal output
7	CD BUS0	I/O	Bus data signal input/output 0
8	CD BUS1	I/O	Bus data signal input/output 1
9	VSS	—	Ground pin
10	CD BUS2	I/O	Bus data signal input/output 2
11	CD BUS3	I/O	Bus data signal input/output 3
12	CD BUCK	O	Bus clock signal output
13	CD XCCE	O	Chip enable signal output
14	CD XRST	O	Reset signal output
15	CD ZDET	I	Zero detection signal input
16 to 20	NC	—	Not used. (Open)
21	VCC	—	Power supply pin (+3.3 V)
22	DAC ZDETL	I	Zero data detection signal input (L-ch)
23	DAC ZDETR	I	Zero data detection signal input (R-ch)
24	NC	—	Not used. (Open)
25	RXD	I	UART RXD data signal input (MCBUS/Flash data input)
26	TXD	O	UART TXD data signal output (MCBUS/Flash data output)
27	DEC SSTBY	O	SRAM STANDBY mode control signal output
28, 29	NC	—	Not used. (Open)
30	DEC INT	I	Request signal input
31, 32	NC	—	Not used. (Open)
33	AVCC	—	Power supply pin (+3.3 V) for A/D converter
34	AVRH	—	External reference voltage for A/D converter
35	AVSS	—	Ground pin
36	NC	—	Not used. (Open)
37	DEC XMUTE	O	Mute signal output L: mute
38, 39	NC	—	Not used. (Open)
40	VSS	—	Ground pin
41	NC	—	Not used. (Open)
42	MEC LIMIT	I	Sled limit in detection switch signal input
43	MEC LOAD	O	Loading motor signal output (Load direction)
44	MEC EJECT	O	Loading motor signal output (Eject direction)
45	MEC INSW	I	Pack-in detection signal input
46	MEC DSW	I	Chucking end detection switch signal input
47, 48	MD0, MD1	I	CPU operation mode designation signal input (Connect to Vcc.)
49	MD2	I	CPU operation mode designation signal input (Connect to Vss.)
50	$\overline{\text{BUS ON}}$	I	Bus on signal input L: bus on
51	BU IN	I	Backup on/off signal input H: backup on, L: backup off
52	NC	—	Not used. (Open)
53	$\overline{\text{MEC SELFSW}}$	I	Disc insert detection switch signal input L: disc in interruption
54, 55	NC	—	Not used. (Open)
56	UNISI	I	Serial data signal input
57	UNISO	O	Serial data signal output
58	UNICKI	I	Serial clock signal input
59	LINKOFF	O	Line off signal output
60	A ATT	O	Audio attenuation signal output H: ATT on
61	EJECT OK	I	Front panel open signal input H: eject
62	OPEN REQ	O	Front panel open/close request signal output H: open request
63	MECON	O	Mechanism deck power supply control signal output

Pin No.	Pin Name	I/O	Pin Description
64	CDON	O	Servo power supply control signal output H: power on
65	XUART	I	Sony-Bus/MC-Bus change signal input H: Sony-Bus, L: MC-Bus
66	ZMUTE	O	Zero detection mute signal output
67	MECON CHK	I	MECON rising detection signal input
68	CDON CHK	I	CDON rising detection signal input
69 to 74	NC	—	Not used. (Open)
75	$\overline{\text{RSTX}}$	I	System reset signal input
76	NC	—	Not used. (Open)
77	X1A	—	Sub-clock connect pin Not used in this set. (Open)
78	X0A	—	Sub-clock connect pin Not used in this set. (Connect to Vss.)
79	VSS	—	Ground pin
80	X0	I	Main-clock connect pin (12 MHz)
81	X1	O	Main-clock connect pin (12 MHz)
82	VCC	—	Power supply pin (+3.3 V)
83	XWD	I	Not used in this set. (Open)
84	XINIT3	I	Not used in this set. (Open)
85	NC	—	Not used. (Open)
86	XSJIG	I	Not used in this set. (Open)
87 to 89	XINIT0 to 2	I	Not used in this set. (Open)
90 to 96	NC	—	Not used. (Open)
97	XDES	I	Mode select pin
98	XLINE	I	Not used in this set. (Open)
99, 100	NC	—	Not used. (Open)

IC711 MB90487APF-G-162E1 (SYSTEM CONTROL) (MAIN BOARD (3/3))

Pin No.	Pin Name	I/O	Pin Description
1	AREASEL2	I	Destination setting pin
2	AREASEL1	I	Destination setting pin
3	AREASEL0	I	Destination setting pin
4	NCO	O	Not used. (Open)
5	$\overline{\text{NOSE SW}}$	I	Front panel open/close detect signal input L: Panel on, H: Panel off
6	NCO	O	Not used. (Open)
7	BEEP	O	Beep signal output
8	DIAG	I	Power AMP status signal input
9	$\overline{\text{VOL ATT}}$	O	Electronic volume attenuate control signal output
10	FSW IN	I	D/D converter oscillater frequency count signal input
11	VSS	—	Ground pin
12	TUATT	O	Tuner mute control signal output
13	NSMASK	O	Noise mask signal output (AEP, UK model only)
14	ILLUMI SEL	I	Illumination voltage setting signal input
15	SEL1	O	Not used in this set. (Open)
16	NCO	O	Not used. (Open)
17	$\overline{\text{AUXIN}}$	O	AUX select signal output L: AUX, H: BUS IN
18	DISP RSET	O	Display reset signal output
19	FL ON	O	D/D converter control signal output H: On
20	DISP ON	O	Display control signal output H: On
21	ATT	O	Audio mute control signal output
22	$\overline{\text{SYSRST}}$	O	System control reset signal output
23	VCC5	—	Power supply pin (+3.3 V)
24	EEP SIO	I/O	EEPROM bus serial data input/output
25	EEP CKO	O	EEPROM bus serial clock output
26	AMPSTB	O	Power AMP satandby signal output
27	DISP RX	I/O	Display IC communication signal input/output
28	DISP TX	O	Display IC communication signal output
29	MAST IF	O	Display IC communication start signal output
30	RDS ON	O	RDS ON signal output (AEP, UK model only)
31	RE IN0	I	Rotary encoder signal input 0
32	RE IN1	I	Rotary encoder signal input 1
33	I2C SCK	O	I2C bus serial clock signal output
34	I2C SIO	I/O	I2C bus serial data signal input/output
35	DAVDD	—	A/D converter power supply pin (+3.3 V)
36	AVRH	—	A/D converter external reference power supply pin (+3.3 V)
37	DAVSS	—	Ground pin
38	QUALITY	I	Noise detect signal input (AEP, UK model only)
39	VSM	I	S-meter voltage detect signal input
40	KEYIN1	I	Key signal input 1
41	KEYIN0	I	Key signal input 0
42	VSS	—	Ground pin
43	RC IN0	I	Rotary commander key signal input
44	SA IN	I	Spectrum analyzer signal input
45	SA CKO	O	Spectrum analyzer clock signal output
46 to 48	NCO	O	Not used. (open)
49	MD0	I	Operation mode setting pin (Connect to VDD.)
50	MD1	I	Operation mode setting pin (Connect to VDD.)
51	MD2	I	Operation mode setting pin (Connect to VSS.)

Pin No.	Pin Name	I/O	Pin Description
52	KEYACK	I	Key acknowledgment detect signal input
53	TU ATTIN	I	Tuner mute zero cross detect signal input (AEP, UK model only)
54	BUIN	I	Back-up power supply detect signal input
55	NCO	O	Not used. (Open)
56	DAVN	I	RDS data block synchronized detect signal input (AEP, UK model only)
57	NCO	O	Not used. (Open)
58	UNISI	I	SONY bus data signal input
59	UNISO	O	SONY bus data signal output
60	UNISCK	O	SONY bus clock signal output
61	NCO	O	Not used. (Open)
62	NCO	O	Not used. (Open)
63	DOOR IND	O	CD IN LED control signal output H: On
64	SIRCS	I	Remote control signal input
65	NCO	O	Not used. (Open)
66	FSW OUT	O	D/D converter oscillater frequency shift control signal output L: 300 kHz, H: 400 kHz
67	DISP FLASHW	I	Display IC flash ROM write signal input
68	FLASH W	I	Memory mode select signal input L: Write mode
69	NCO	O	Not used. (Open)
70	DOOR SW	I	Panel open/ close detect signal input H: Panel open
71	RC IN1	I	Rotary commander shift key signal input
72	$\overline{\text{ACC IN}}$	I	Accessory power supply detect signal input
73	$\overline{\text{TESTIN}}$	I	Test mode detect signal input
74	TELATT	I	Telephone attenuate detect signal input
75	ILUIN	I	Auto dimmer illumination detect signal input H: Ill off
76	$\overline{\text{XKEYON}}$	O	A/D converter power supply control signal output
77	$\overline{\text{RESET}}$	I	CPU reset signal input
78	NCO	O	Not used. (Open)
79	XIN	I	Sub-clock input (32.768 kHz)
80	XOUT	O	Sub-clock output (32.768 kHz)
81	VSS1	—	Ground pin
82	OSC OUT	O	Main-clock output (18.432 MHz)
83	OSC IN	I	Main-clock input (18.432 MHz)
84	VCC3	—	Power supply pin (+3.3 V)
85	SEL2	O	Not used in this set. (Open)
86	SEL5	O	Not used in this set. (Open)
87	$\overline{\text{BUSON}}$	O	Bus on signal output
88	SEL3	O	Not used in this set. (Open)
89	EJECT OK	O	Eject OK signal output
90 to 92	NCO	O	Not used. (Open)
93	Z-MUTE	I	CD zero cross mute detect signal input
94, 95	NCO	O	Not used. (Open)
96	CYRIL SEL	I	Cyril select signal input L: Cyril off, H: Cyril on
97	SEL4	O	Not used in this set. (Open)
98	CD ON	I	CD mechanism power control request signal input
99	CDM ON	I	CD mechanism deck power control request signal input
100	NCO	O	Not used. (Open)

SECTION 4
EXPLODED VIEWS

NOTE:
- The mechanical parts with no reference number in the exploded views are not supplied.
- Items marked "*" are not stocked since they are seldom required for routine service. Some delay should be anticipated when ordering these items.
- -XX and -X mean standardized parts, so they may have some difference from the original one.

- Color Indication of Appearance Parts
  Example :
  KNOB, BALANCE (WHITE) ... (RED)
  ↑ Parts Color ↑ Cabinet's Color
- Accessories are given in the last of this parts list.
- Abbreviation
  CND: Canadian model
  EE : East European model
  MX : Mexican model
  CH : Chinese model

The components identified by mark ⚠ or dotted line with mark ⚠ are critical for safety.
Replace only with part number specified.

Les composants identifiés par une marque ⚠ sont critiques pour la sécurité.
Ne les remplacer que par une piéce portant le numéro spécifié.

4-1. MAIN SECTION

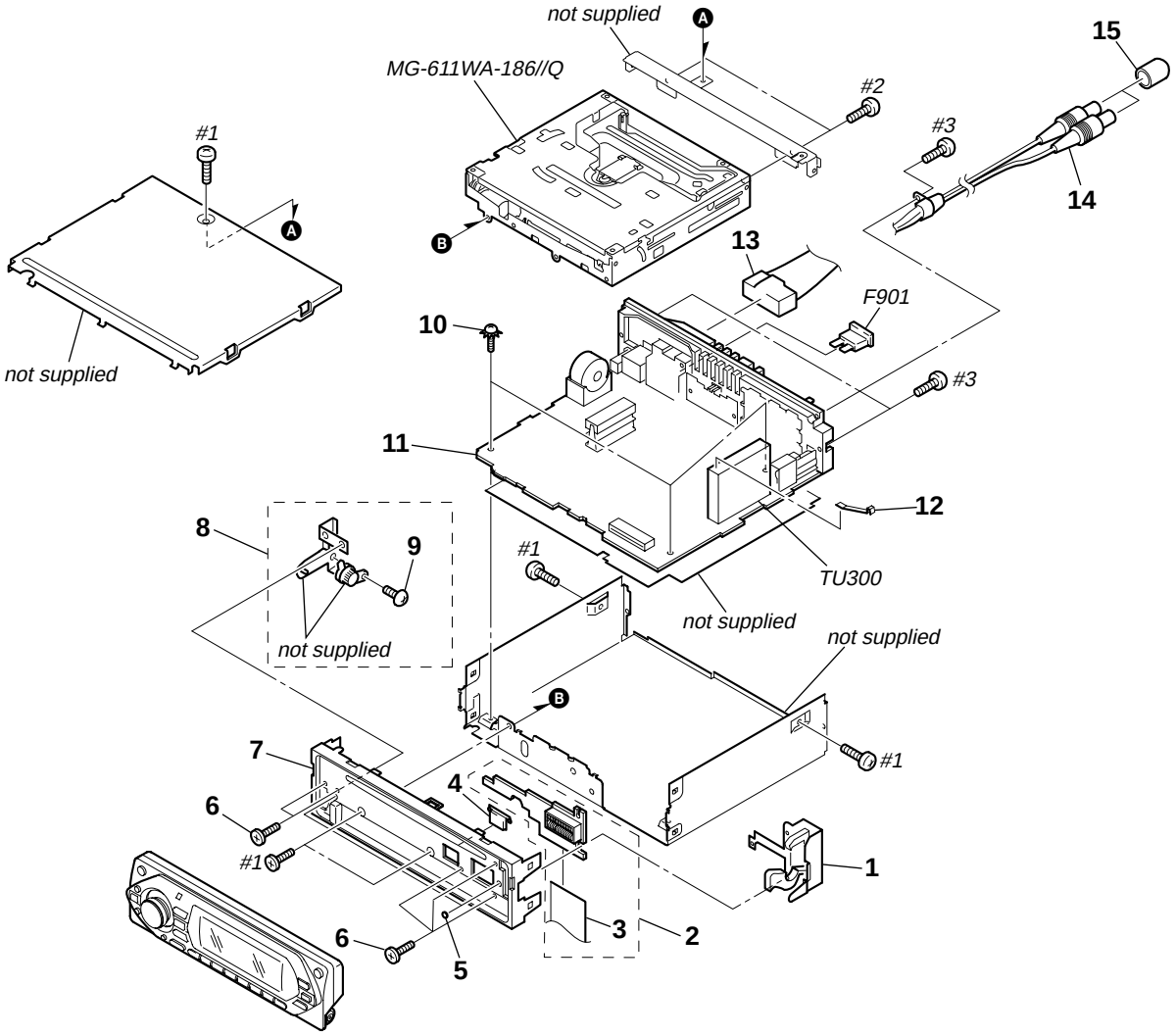

Ref. No.	Part No.	Description	Remark
1	X-3384-259-1	LOCK ASSY	
2	A-1156-589-A	SUB BOARD, COMPLETE (GT500/GT550)	
2	A-1158-907-A	SUB BOARD, COMPLETE (GT50W/GT500EE)	
3	1-831-502-11	CABLE, FLEXIBLE FLAT (22 CORE)	
4	3-246-441-01	BUTTON (EJECT)	
5	3-260-247-01	CUSHION (SUB PANEL)	
6	3-042-244-01	SCREW (T)	
7	X-2067-744-1	PANEL ASSY, SUB (FL)	
8	X-3384-203-1	GEAR ASSY	
9	3-713-786-51	SCREW +P 2X3	
10	3-376-464-11	SCREW (+PTT 2.6X6), GROUND POINT	
11	A-1156-591-A	MAIN BOARD, COMPLETE (US,CND)	
11	A-1158-884-A	MAIN BOARD, COMPLETE (AEP,UK)	
11	A-1158-896-A	MAIN BOARD, COMPLETE (GT550)	
11	A-1158-918-A	MAIN BOARD, COMPLETE (GT500EE)	

Ref. No.	Part No.	Description	Remark
12	2-021-848-01	SHEET (TU), GROUND	
13	1-776-207-72	CORD (WITH CONNECTOR) (POWER)	(EXCEPT AEP,UK,EE)
13	1-776-527-71	CORD (WITH CONNECTOR) (ISO) (POWER)	(AEP,UK,EE)
14	1-790-355-54	CORD (WITH CONNECTOR) (RCA)	(SUB OUT (MONO))
15	3-264-798-01	CAP	
F901	1-532-877-11	FUSE (BLADE TYPE) (AUTO FUSE) 10A	
TU300	A-3220-961-B	TUNER UNIT (TUX-032)	
#1	7-685-792-09	SCREW +PTT 2.6X6 (S)	
#2	7-685-790-01	SCREW +PTT 2.6X4 (S)	
#3	7-685-793-09	SCREW +PTT 2.6X8 (S)	

4-2. FRONT PANEL SECTION

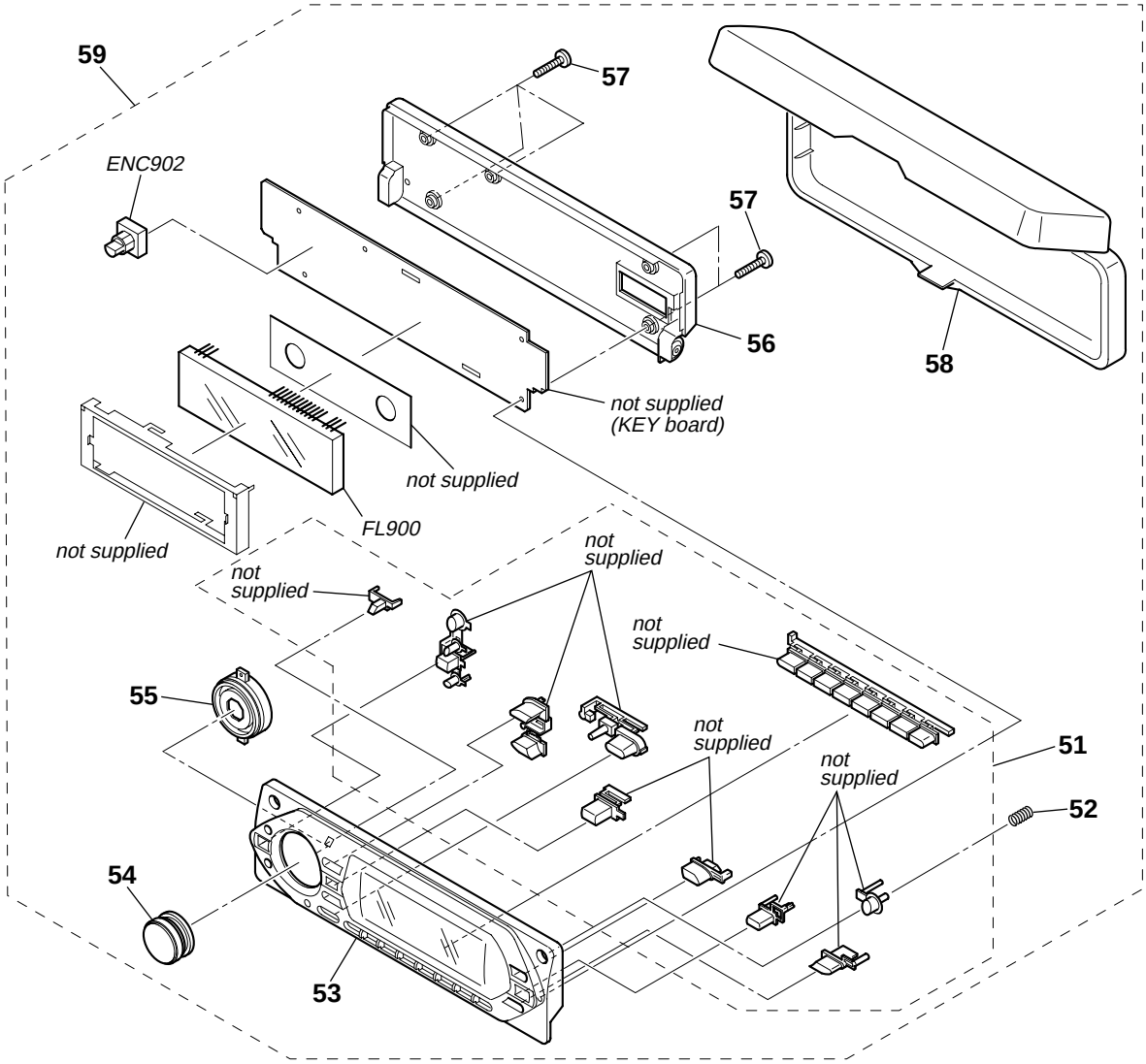

Ref. No.	Part No.	Description	Remark
51	X-2103-564-1	BUTTON ASSY (S) (EXCEPT AEP,UK)	
51	X-2103-565-1	BUTTON ASSY (S) (AEP,UK)	
52	3-264-712-01	SPRING (OPEN)	
53	X-2103-559-1	PANEL (SV) ASSY, FRONT (GT500:US,CND)	
53	X-2103-560-1	PANEL (SV) ASSY, FRONT (GT500:AEP,UK)	
53	X-2103-561-1	PANEL (SV) ASSY, FRONT (GT550)	
53	X-2103-562-1	PANEL (SV) ASSY, FRONT (GT50W)	
53	X-2103-563-1	PANEL (SV) ASSY, FRONT (GT500EE)	
54	X-2103-060-1	KNOB ASSY (S)	
55	2-630-985-01	LIGHT GUIDE (VOLUME)	
56	X-2067-746-1	PANEL ASSY, FRONT BACK	

Ref. No.	Part No.	Description	Remark
57	3-250-543-21	SCREW (+B P-TITE M2)	
58	X-2055-358-1	CASE ASSY (for FRONT PANEL) (EXCEPT US)	
59	A-1156-594-A	PANEL COMPLETE ASSY, FRONT (GT500:US)	
59	A-1158-887-A	PANEL COMPLETE ASSY, FRONT (GT500:AEP,UK)	
59	A-1158-899-A	PANEL COMPLETE ASSY, FRONT (GT550)	
59	A-1158-910-A	PANEL COMPLETE ASSY, FRONT (GT50W)	
59	A-1158-922-A	PANEL COMPLETE ASSY, FRONT (GT500EE)	
59	A-1173-675-A	PANEL COMPLETE ASSY, FRONT (GT500:CND)	
ENC902	1-479-481-12	ENCODER, ROTARY (PUSH SELECT/VOLUME)	
FL900	1-519-842-11	VACUUM FLUORESCENT DISPLAY	

4-3. CD MECHANISM SECTION (1) (MG-611WA-186//Q)

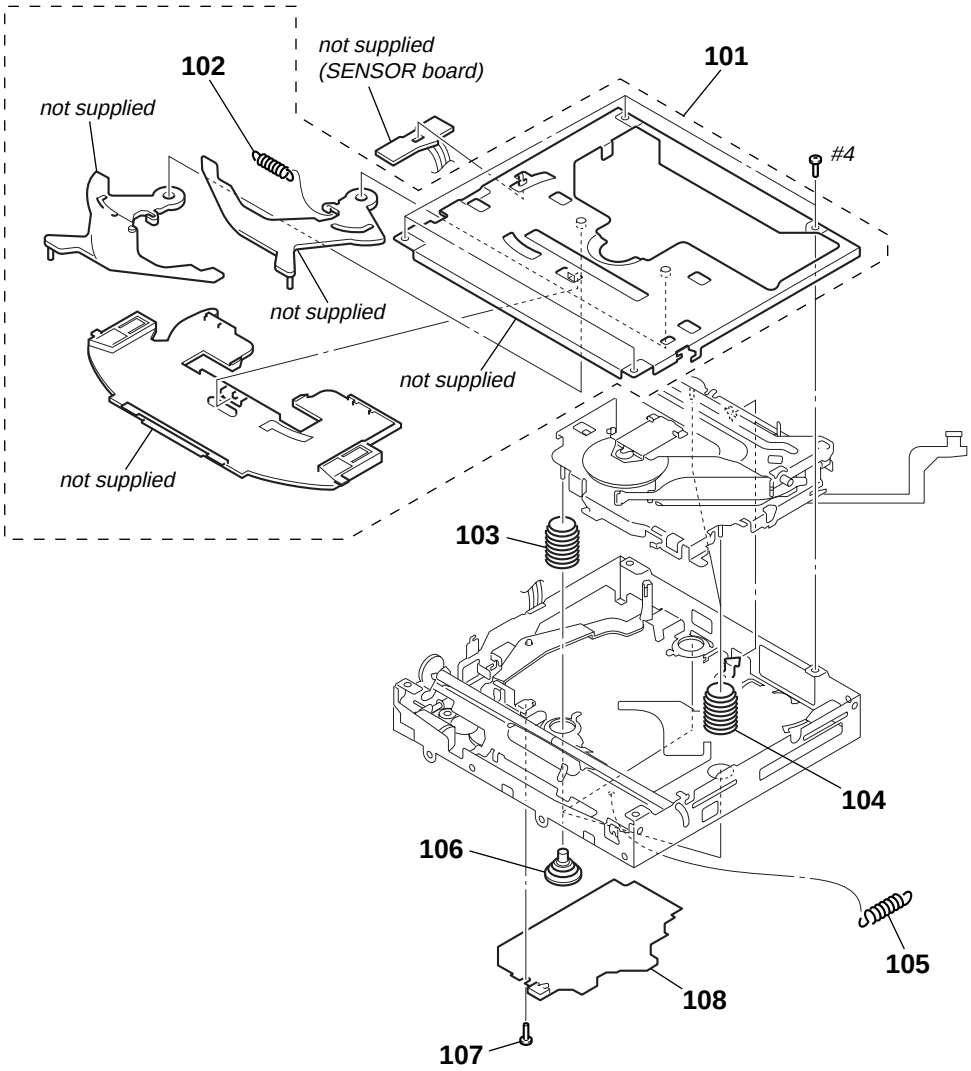

Ref. No.	Part No.	Description	Remark	Ref. No.	Part No.	Description	Remark
101	A-3372-444-C	CHASSIS (T) SUB ASSY		106	3-259-033-01	DAMPER (S)	
102	3-253-729-11	SPRING (LR), TENSION COIL		107	2-587-505-01	SCREW	
103	3-257-892-12	SPRING (DAMPER), COIL (GREEN)		108	A-1132-412-A	SERVO BOARD, COMPLETE	
104	3-257-892-01	SPRING (DAMPER), COIL (NATURAL)		#4	7-627-552-87	SCREW, PRECISION +P 1.7X2.2	
105	2-345-767-11	SPRING (KF60), TENSION					

4-4. CD MECHANISM SECTION (2) (MG-611WA-186//Q)

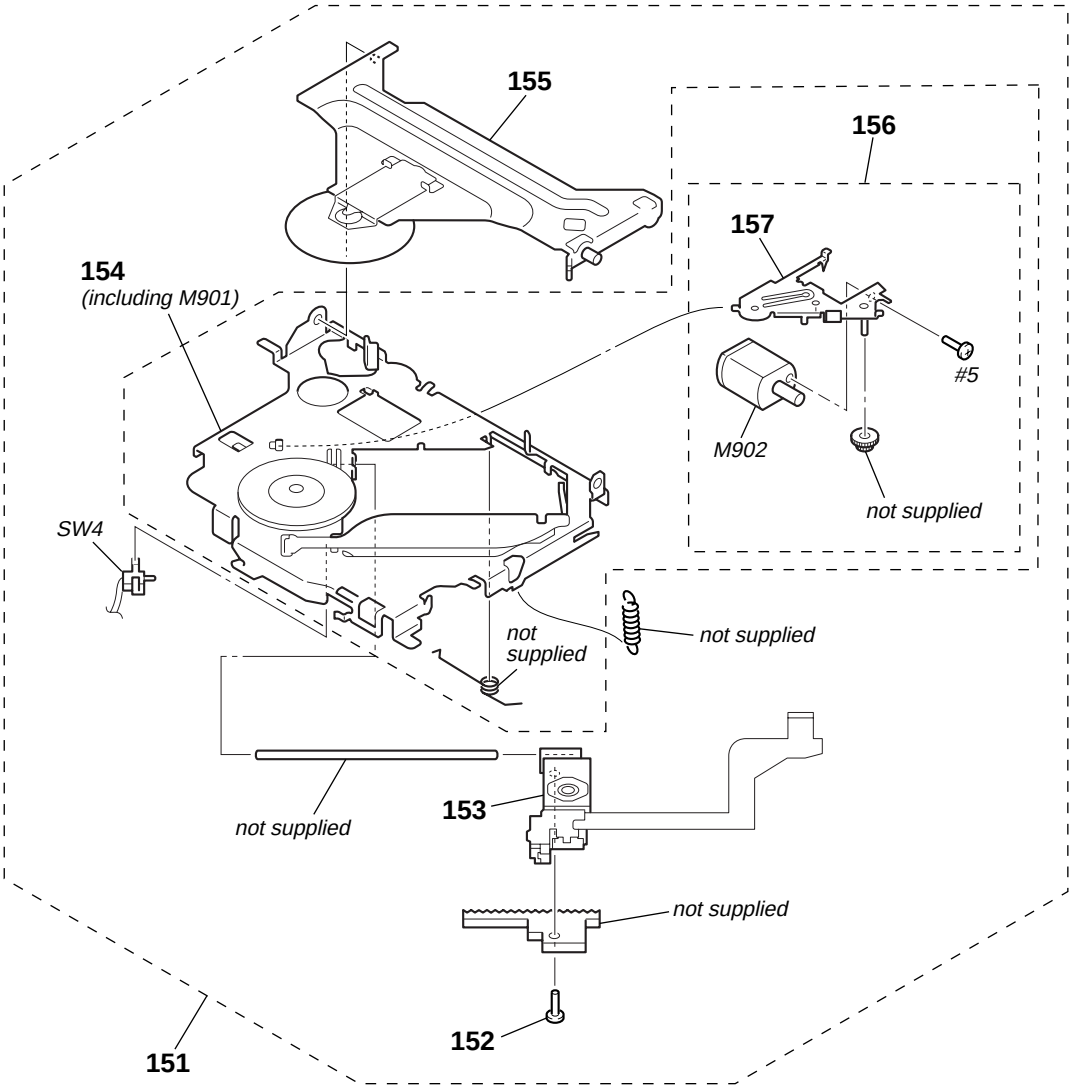

Ref. No.	Part No.	Description	Remark	Ref. No.	Part No.	Description	Remark
151	A-1075-644-A	CHASSIS (OP) COMPLETE ASSY		156	A-3372-446-A	LEVER (SL) SUB ASSY	
152	3-316-938-91	SCREW (B1.4X5), TAPPING		157	X-3384-090-3	LEVER (SL) ASSY	
⚠153	8-820-207-12	OPTICAL PICK-UP (KSS1000E/K1RP)		M902	A-3372-447-A	MOTOR ASSY, SL (SLED)	
154	A-1075-645-A	CHASSIS (OP) SUB ASSY (including M901)		SW4	1-571-099-11	SWITCH (1 KEY) (LIMIT)	
155	A-3372-449-A	ARM SUB ASSY, CHUCKING		#5	7-627-850-77	SCREW, PRECISION +P 1.4X1.8	

4-5. CD MECHANISM SECTION (3)
(MG-611WA-186//Q)

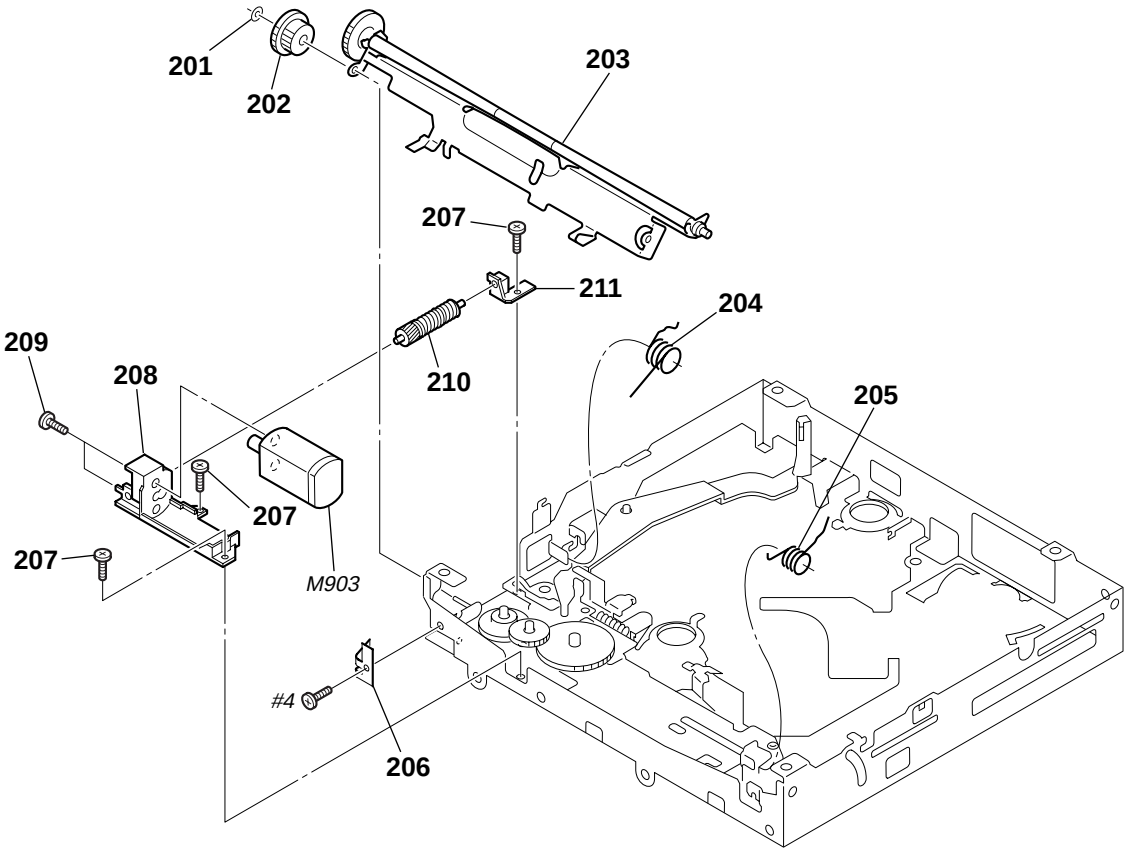

Ref. No.	Part No.	Description	Remark
201	3-348-993-01	WASHER	
202	2-186-699-01	GEAR (RA1)	
203	A-1075-641-C	ARM ASSY, ROLLER	
204	2-635-295-01	SPRING (RAL-B)	
205	2-635-296-01	SPRING (RAR-B)	
206	3-259-469-12	SPRING (LE), LEAF	
207	2-134-636-21	SCREW (M1.7X2.5)	
208	2-186-696-02	BRACKET (LEM-N)	
209	3-345-648-91	SCREW (M1.4), TOOTHED LOCK	
210	A-1083-636-A	GEAR (LE) ASSY	
211	2-186-697-01	BEARING (LEB-N)	
M903	A-1166-300-A	MOTOR ASSY (B), LE (LOADING)	
#4	7-627-552-87	SCREW, PRECISION +P 1.7X2.2	

4-6. CD MECHANISM SECTION (4) (MG-611WA-186//Q)

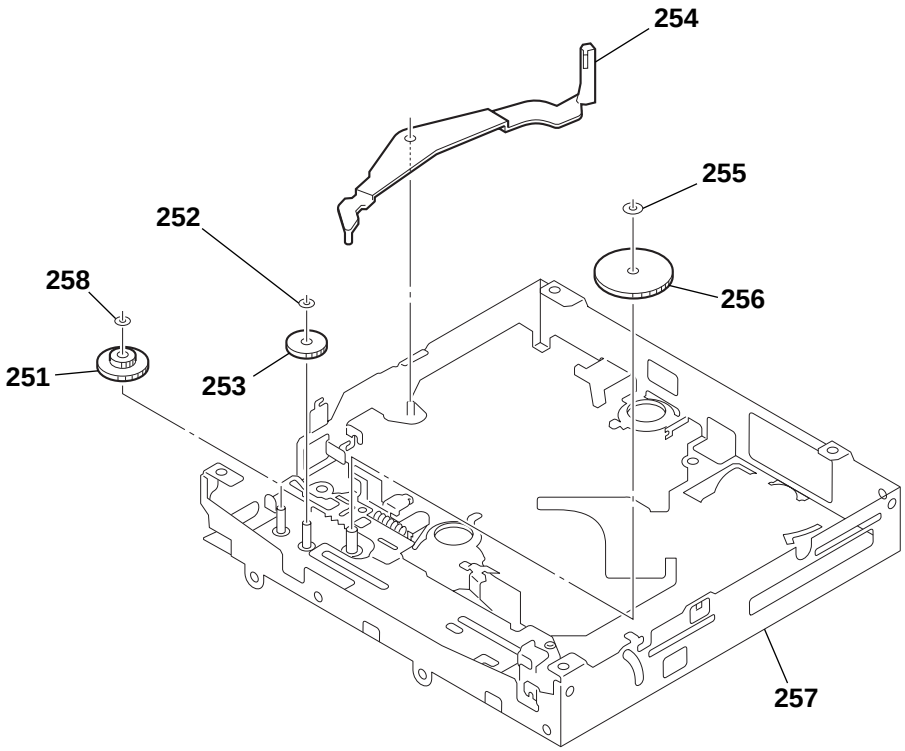

Ref. No.	Part No.	Description	Remark	Ref. No.	Part No.	Description	Remark
251	2-186-700-01	GEAR (CHK1)		255	2-630-962-01	WASHER (SLIT)	
252	3-344-223-01	WASHER		* 256	2-590-545-01	GEAR (LE2-M)	
253	3-259-470-12	GEAR (LE1)		257	A-1075-640-B	CHASSIS (M) BLOCK ASSY	
254	3-253-755-41	LEVER (D)		258	3-348-993-01	WASHER	

KEY

SECTION 5
ELECTRICAL PARTS LIST

NOTE:
- Due to standardization, replacements in the parts list may be different from the parts specified in the diagrams or the components used on the set.
- -XX and -X mean standardized parts, so they may have some difference from the original one.
- RESISTORS
  All resistors are in ohms.
  METAL:Metal-film resistor.
  METAL OXIDE: Metal oxide-film resistor.
  F:nonflammable
- Items marked "*" are not stocked since they are seldom required for routine service. Some delay should be anticipated when ordering these items.
- SEMICONDUCTORS
  In each case, u : µ, for example:
  uA.. : µA.. uPA.. : µPA..
  uPB.. : µPB.. uPC.. : µPC.. uPD.. : µPD..
- CAPACITORS
  uF : µF
- COILS
  uH : µH
- Abbreviation
  CND: Canadian model
  EE : East European model
  MX : Mexican model
  CH : Chinese model

The components identified by mark ⚠ or dotted line with mark ⚠ are critical for safety.
Replace only with part number specified.

Les composants identifiés par une marque ⚠ sont critiques pour la sécurité.
Ne les remplacer que par une piéce portant le numéro spécifié.

When indicating parts by reference number, please include the board.

Ref. No.	Part No.	Description				Remark
		KEY BOARD				
		**********				
		< CAPACITOR >				
C901	1-127-715-11	CERAMIC CHIP	0.22uF	10%	16V	
C903	1-163-021-11	CERAMIC CHIP	0.01uF	10%	50V	
C904	1-163-021-11	CERAMIC CHIP	0.01uF	10%	50V	
C970	1-107-826-11	CERAMIC CHIP	0.1uF	10%	16V	
C971	1-107-826-11	CERAMIC CHIP	0.1uF	10%	16V	
C972	1-107-826-11	CERAMIC CHIP	0.1uF	10%	16V	
C973	1-125-837-11	CERAMIC CHIP	1uF	10%	6.3V	
C974	1-107-826-11	CERAMIC CHIP	0.1uF	10%	16V	
C975	1-162-913-11	CERAMIC CHIP	8PF	0.5PF	50V	
C976	1-162-913-11	CERAMIC CHIP	8PF	0.5PF	50V	
C977	1-125-837-11	CERAMIC CHIP	1uF	10%	6.3V	
C978	1-100-623-11	CERAMIC CHIP	0.1uF	10%	100V	
C980	1-127-715-11	CERAMIC CHIP	0.22uF	10%	16V	
C981	1-107-826-11	CERAMIC CHIP	0.1uF	10%	16V	
C984	1-107-826-11	CERAMIC CHIP	0.1uF	10%	16V	
C985	1-107-826-11	CERAMIC CHIP	0.1uF	10%	16V	
		< CONNECTOR >				
CNP900	1-818-141-11	PLUG, CONNECTOR 20P				
		< DIODE >				
D900	6-501-167-01	DIODE UDZW-TE17-5.1B				
D901	6-500-886-01	DIODE RSA6.1ENTR				
D903	6-500-886-01	DIODE RSA6.1ENTR				
D904	6-501-180-01	DIODE UDZW-TE17-18B				
D905	6-501-170-01	DIODE UDZW-TE17-6.8B				
D906	6-501-170-01	DIODE UDZW-TE17-6.8B				
D909	6-500-886-01	DIODE RSA6.1ENTR				
D910	6-501-193-01	DIODE 1SS355WTE-17				
		< ROTARY ENCODER >				
ENC902	1-479-481-12	ENCODER, ROTARY (PUSH SELECT/VOLUME)				
		< VACUUM FLUORESCENT DISPLAY >				
FL900	1-519-842-11	VACUUM FLUORESCENT DISPLAY				
		< IC >				
IC900	6-600-163-01	IC RS-770 (IR)				
IC901	6-806-178-01	IC uPD703263GC-103-8EA-A				
IC902	6-707-877-01	IC TC74VHC32FT(EKJ)				
IC971	8-759-659-13	IC PST3428UL				
		< LED >				
LED900	6-500-450-01	LED CL-195SR-CD-T				(VOLUME ILLUMINATION) (GT500/GT550)
LED900	6-500-510-01	LED CL-195PG-CD-T				(VOLUME ILLUMINATION) (GT50W/GT500EE)
LED901	6-500-450-01	LED CL-195SR-CD-T				(VOLUME ILLUMINATION) (GT500/GT550)
LED901	6-500-510-01	LED CL-195PG-CD-T				(VOLUME ILLUMINATION) (GT50W/GT500EE)
LED902	6-500-450-01	LED CL-195SR-CD-T				(VOLUME ILLUMINATION) (GT500/GT550)
LED902	6-500-510-01	LED CL-195PG-CD-T				(VOLUME ILLUMINATION) (GT50W/GT500EE)
LED903	6-500-450-01	LED CL-195SR-CD-T				(VOLUME ILLUMINATION) (GT500/GT550)
LED903	6-500-510-01	LED CL-195PG-CD-T				(VOLUME ILLUMINATION) (GT50W/GT500EE)
LED904	6-500-450-01	LED CL-195SR-CD-T (SOURCE)				(GT500/GT550)
LED904	6-500-510-01	LED CL-195PG-CD-T (SOURCE)				(GT50W/GT500EE)
LED905	6-500-450-01	LED CL-195SR-CD-T (MODE) (GT500/GT550)				
LED905	6-500-510-01	LED CL-195PG-CD-T (MODE)				(GT50W/GT500EE)
LED906	6-500-450-01	LED CL-195SR-CD-T (SCRL)				(GT500:US,CND/GT550)
LED906	6-500-450-01	LED CL-195SR-CD-T (AF/TA)				(GT500:AEP,UK)
LED906	6-500-510-01	LED CL-195PG-CD-T (SCRL)				(GT50W/GT500EE)
LED907	6-500-450-01	LED CL-195SR-CD-T (3) (GT500/GT550)				
LED907	6-500-510-01	LED CL-195PG-CD-T (3) (GT50W/GT500EE)				
LED908	6-500-450-01	LED CL-195SR-CD-T (2) (GT500/GT550)				
LED908	6-500-510-01	LED CL-195PG-CD-T (2) (GT50W/GT500EE)				
LED909	6-500-450-01	LED CL-195SR-CD-T (1) (GT500/GT550)				
LED909	6-500-510-01	LED CL-195PG-CD-T (1) (GT50W/GT500EE)				
LED910	6-500-450-01	LED CL-195SR-CD-T (6) (GT500/GT550)				

KEY

Ref. No.	Part No.	Description	Remark
LED910	6-500-510-01	LED CL-195PG-CD-T (6) (GT50W/GT500EE)	
LED911	6-500-450-01	LED CL-195SR-CD-T (5) (GT500/GT550)	
LED911	6-500-510-01	LED CL-195PG-CD-T (5) (GT50W/GT500EE)	
LED912	6-500-450-01	LED CL-195SR-CD-T (4) (GT500/GT550)	
LED912	6-500-510-01	LED CL-195PG-CD-T (4) (GT50W/GT500EE)	
LED913	6-500-450-01	LED CL-195SR-CD-T (DSO) (GT500/GT550)	
LED913	6-500-510-01	LED CL-195PG-CD-T (DSO)	(GT50W/GT500EE)
LED914	6-500-450-01	LED CL-195SR-CD-T (IMAGE)	(GT500/GT550)
LED914	6-500-510-01	LED CL-195PG-CD-T (IMAGE)	(GT50W/GT500EE)
LED915	6-500-450-01	LED CL-195SR-CD-T (EQ3) (GT500/GT550)	
LED915	6-500-510-01	LED CL-195PG-CD-T (EQ3)	(GT50W/GT500EE)
		< SWITCH >	
LSW901	1-786-800-11	SWITCH, TACTILE (WITH LED) (OFF)	(GT500/GT550)
LSW901	1-786-801-11	SWITCH, TACTILE (WITH LED) (OFF)	(GT50W/GT500EE)
LSW902	1-786-800-11	SWITCH, TACTILE (WITH LED) (DSPL)	(GT500/GT550)
LSW902	1-786-801-11	SWITCH, TACTILE (WITH LED) (DSPL)	(GT50W/GT500EE)
LSW903	1-786-805-11	SWITCH, TACTILE (WITH LED) (SENS)	(GT500:US,CND/GT550)
LSW903	1-786-805-11	SWITCH, TACTILE (WITH LED) (SENS/BTM)	(GT500:AEP,UK)
LSW903	1-786-806-11	SWITCH, TACTILE (WITH LED) (SENS)	(GT50W/GT500EE)
LSW904	1-786-805-11	SWITCH, TACTILE (WITH LED)	(SEEK + ▶▶I ▶▶) (GT500/GT550)
LSW904	1-786-806-11	SWITCH, TACTILE (WITH LED)	(SEEK + ▶▶I ▶▶) (GT50W/GT500EE)
LSW905	1-786-805-11	SWITCH, TACTILE (WITH LED) (BTM/CAT)	(GT500:US,CND)
LSW905	1-786-805-11	SWITCH, TACTILE (WITH LED) (PTY)	(GT500:AEP,UK)
LSW905	1-786-805-11	SWITCH, TACTILE (WITH LED) (BTM) (GT550)	
LSW905	1-786-806-11	SWITCH, TACTILE (WITH LED) (BTM/CAT)	(GT50W)
LSW905	1-786-806-11	SWITCH, TACTILE (WITH LED) (BTM)	(GT500EE)
LSW907	1-786-805-11	SWITCH, TACTILE (WITH LED) (GP/ALBM +)	(GT500/GT550)
LSW907	1-786-806-11	SWITCH, TACTILE (WITH LED) (GP/ALBM +)	(GT50W/GT500EE)
LSW908	1-786-805-11	SWITCH, TACTILE (WITH LED)	(SEEK – I◀◀ ◀◀) (GT500/GT550)
LSW908	1-786-806-11	SWITCH, TACTILE (WITH LED)	(SEEK – I◀◀ ◀◀) (GT50W/GT500EE)
LSW909	1-786-805-11	SWITCH, TACTILE (WITH LED) (GP/ALBM –)	(GT500/GT550)
LSW909	1-786-806-11	SWITCH, TACTILE (WITH LED) (GP/ALBM –)	(GT50W/GT500EE)

Ref. No.	Part No.	Description			Remark
		< RESISTOR >			
R900	1-216-815-11	METAL CHIP	330	5%	1/10W
R901	1-216-815-11	METAL CHIP	330	5%	1/10W
R902	1-216-864-11	SHORT CHIP	0		
R903	1-216-801-11	METAL CHIP	22	5%	1/10W
R904	1-216-801-11	METAL CHIP	22	5%	1/10W
R905	1-216-797-11	METAL CHIP	10	5%	1/10W
R906	1-216-797-11	METAL CHIP	10	5%	1/10W
R907	1-216-801-11	METAL CHIP	22	5%	1/10W
R908	1-216-801-11	METAL CHIP	22	5%	1/10W
R909	1-216-801-11	METAL CHIP	22	5%	1/10W
R910	1-216-801-11	METAL CHIP	22	5%	1/10W
R911	1-216-819-11	METAL CHIP	680	5%	1/10W
R912	1-216-819-11	METAL CHIP	680	5%	1/10W
R913	1-216-819-11	METAL CHIP	680	5%	1/10W
R914	1-216-821-11	METAL CHIP	1K	5%	1/10W
R915	1-216-823-11	METAL CHIP	1.5K	5%	1/10W
R916	1-216-823-11	METAL CHIP	1.5K	5%	1/10W
R917	1-216-825-11	METAL CHIP	2.2K	5%	1/10W
R918	1-216-827-11	METAL CHIP	3.3K	5%	1/10W
R919	1-216-829-11	METAL CHIP	4.7K	5%	1/10W
R920	1-218-867-11	METAL CHIP	6.8K	0.5%	1/10W
R921	1-216-809-11	METAL CHIP	100	5%	1/10W
R922	1-216-809-11	METAL CHIP	100	5%	1/10W
R923	1-216-819-11	METAL CHIP	680	5%	1/10W
R924	1-216-819-11	METAL CHIP	680	5%	1/10W
R925	1-216-819-11	METAL CHIP	680	5%	1/10W
R926	1-216-821-11	METAL CHIP	1K	5%	1/10W
R927	1-216-823-11	METAL CHIP	1.5K	5%	1/10W
R928	1-216-823-11	METAL CHIP	1.5K	5%	1/10W
R929	1-216-825-11	METAL CHIP	2.2K	5%	1/10W
R930	1-216-827-11	METAL CHIP	3.3K	5%	1/10W
R931	1-216-829-11	METAL CHIP	4.7K	5%	1/10W
R932	1-218-867-11	METAL CHIP	6.8K	0.5%	1/10W
R933	1-216-812-11	METAL CHIP	180	5%	1/10W (GT50W/GT500EE)
R933	1-216-813-11	METAL CHIP	220	5%	1/10W (GT500/GT550)
R934	1-216-812-11	METAL CHIP	180	5%	1/10W
R935	1-216-812-11	METAL CHIP	180	5%	1/10W (GT50W/GT500EE)
R935	1-216-813-11	METAL CHIP	220	5%	1/10W (GT500/GT550)
R936	1-216-810-11	METAL CHIP	120	5%	1/10W (GT50W/GT500EE)
R936	1-216-811-11	METAL CHIP	150	5%	1/10W (GT500/GT550)
R937	1-216-809-11	METAL CHIP	100	5%	1/10W (GT50W/GT500EE)
R937	1-216-811-11	METAL CHIP	150	5%	1/10W (GT500/GT550)
R938	1-216-813-11	METAL CHIP	220	5%	1/10W (GT50W/GT500EE)
R938	1-216-814-11	METAL CHIP	270	5%	1/10W (GT500/GT550)
R939	1-216-810-11	METAL CHIP	120	5%	1/10W (GT50W/GT500EE)
R939	1-216-811-11	METAL CHIP	150	5%	1/10W (GT500/GT550)

KEY

Ref. No.	Part No.	Description				Remark
R940	1-216-809-11	METAL CHIP	100	5%	1/10W	(GT50W/GT500EE)
R940	1-216-811-11	METAL CHIP	150	5%	1/10W	(GT500/GT550)
R942	1-216-813-11	METAL CHIP	220	5%	1/10W	(GT50W/GT500EE)
R942	1-216-814-11	METAL CHIP	270	5%	1/10W	(GT500/GT550)
R943	1-216-810-11	METAL CHIP	120	5%	1/10W	(GT50W/GT500EE)
R943	1-216-811-11	METAL CHIP	150	5%	1/10W	(GT500/GT550)
R944	1-216-809-11	METAL CHIP	100	5%	1/10W	(GT50W/GT500EE)
R944	1-216-811-11	METAL CHIP	150	5%	1/10W	(GT500/GT550)
R945	1-216-810-11	METAL CHIP	120	5%	1/10W	(GT50W/GT500EE)
R945	1-216-811-11	METAL CHIP	150	5%	1/10W	(GT500/GT550)
R946	1-216-809-11	METAL CHIP	100	5%	1/10W	(GT50W/GT500EE)
R946	1-216-811-11	METAL CHIP	150	5%	1/10W	(GT500/GT550)
R947	1-216-810-11	METAL CHIP	120	5%	1/10W	(GT50W/GT500EE)
R947	1-216-811-11	METAL CHIP	150	5%	1/10W	(GT500/GT550)
R948	1-216-809-11	METAL CHIP	100	5%	1/10W	(GT50W/GT500EE)
R948	1-216-811-11	METAL CHIP	150	5%	1/10W	(GT500/GT550)
R949	1-216-810-11	METAL CHIP	120	5%	1/10W	(GT50W/GT500EE)
R949	1-216-811-11	METAL CHIP	150	5%	1/10W	(GT500/GT550)
R950	1-216-809-11	METAL CHIP	100	5%	1/10W	(GT50W/GT500EE)
R950	1-216-811-11	METAL CHIP	150	5%	1/10W	(GT500/GT550)
R951	1-216-864-11	SHORT CHIP	0			
R952	1-216-864-11	SHORT CHIP	0			
R953	1-216-864-11	SHORT CHIP	0			
R954	1-216-813-11	METAL CHIP	220	5%	1/10W	(GT50W/GT500EE)
R954	1-216-814-11	METAL CHIP	270	5%	1/10W	(GT500/GT550)
R955	1-216-813-11	METAL CHIP	220	5%	1/10W	(GT50W/GT500EE)
R955	1-216-814-11	METAL CHIP	270	5%	1/10W	(GT500/GT550)
R956	1-414-234-22	INDUCTOR, FERRITE BEAD				
R957	1-216-864-11	SHORT CHIP	0			
R958	1-216-295-11	SHORT CHIP	0			
R959	1-216-864-11	SHORT CHIP	0			
R960	1-216-864-11	SHORT CHIP	0			
R961	1-216-864-11	SHORT CHIP	0			
R962	1-216-797-11	METAL CHIP	10	5%	1/10W	
R963	1-216-801-11	METAL CHIP	22	5%	1/10W	
R964	1-414-760-21	INDUCTOR, FERRITE BEAD				
R965	1-414-760-21	INDUCTOR, FERRITE BEAD				
R966	1-414-760-21	INDUCTOR, FERRITE BEAD				
R967	1-414-760-21	INDUCTOR, FERRITE BEAD				
R968	1-414-760-21	INDUCTOR, FERRITE BEAD				
R969	1-216-833-11	METAL CHIP	10K	5%	1/10W	
R970	1-216-801-11	METAL CHIP	22	5%	1/10W	
R971	1-216-864-11	SHORT CHIP	0			
R972	1-414-760-21	INDUCTOR, FERRITE BEAD				
R973	1-216-801-11	METAL CHIP	22	5%	1/10W	
R974	1-414-760-21	INDUCTOR, FERRITE BEAD				
R975	1-414-760-21	INDUCTOR, FERRITE BEAD				
R976	1-414-760-21	INDUCTOR, FERRITE BEAD				
R977	1-414-760-21	INDUCTOR, FERRITE BEAD				
R979	1-414-760-21	INDUCTOR, FERRITE BEAD				
R980	1-216-797-11	METAL CHIP	10	5%	1/10W	
R981	1-414-760-21	INDUCTOR, FERRITE BEAD				
R982	1-414-235-22	INDUCTOR, FERRITE BEAD				
R983	1-216-801-11	METAL CHIP	22	5%	1/10W	
R984	1-216-815-11	METAL CHIP	330	5%	1/10W	
R985	1-216-801-11	METAL CHIP	22	5%	1/10W	
R988	1-414-235-22	INDUCTOR, FERRITE BEAD				
R989	1-216-841-11	METAL CHIP	47K	5%	1/10W	
R990	1-216-845-11	METAL CHIP	100K	5%	1/10W	
R991	1-216-841-11	METAL CHIP	47K	5%	1/10W	
R992	1-216-009-11	RES-CHIP	22	5%	1/10W	
R993	1-216-845-11	METAL CHIP	100K	5%	1/10W	
R994	1-216-815-11	METAL CHIP	330	5%	1/10W	
R995	1-414-760-21	INDUCTOR, FERRITE BEAD				
R996	1-216-797-11	METAL CHIP	10	5%	1/10W	
R997	1-216-821-11	METAL CHIP	1K	5%	1/10W	
R998	1-216-009-11	RES-CHIP	22	5%	1/10W	
R999	1-216-841-11	METAL CHIP	47K	5%	1/10W	
		< SWITCH >				
S908	1-786-653-21	SWITCH, TACTILE (DSO)				
S911	1-786-653-21	SWITCH, TACTILE (SOURCE)				
S912	1-786-653-21	SWITCH, TACTILE (EQ3)				
S913	1-786-653-21	SWITCH, TACTILE (6/PAUSE)				
S914	1-786-653-21	SWITCH, TACTILE (5/BBE MP)				
S915	1-786-653-21	SWITCH, TACTILE (4/SHUF)				
S916	1-786-653-21	SWITCH, TACTILE (3/REP)				
S917	1-786-653-21	SWITCH, TACTILE (2)				
S918	1-786-653-21	SWITCH, TACTILE (1)				
S919	1-786-653-21	SWITCH, TACTILE (SCRL) (GT50W/GT500:US,CND/GT500EE/GT550)				
S919	1-786-653-21	SWITCH, TACTILE (AF/TA) (GT500:AEP,UK)				
S920	1-786-653-21	SWITCH, TACTILE (MODE)				
S921	1-786-653-21	SWITCH, TACTILE (IMAGE)				
		< VIBRATOR >				
X901	1-813-487-21	VIBRATOR, CRYSTAL (5MHz)				

****

Ref. No.	Part No.	Description			Remark
	A-1156-591-A	MAIN BOARD, COMPLETE (US,CND)			
	A-1158-884-A	MAIN BOARD, COMPLETE (AEP,UK)			
	A-1158-896-A	MAIN BOARD, COMPLETE (GT550)			
	A-1158-918-A	MAIN BOARD, COMPLETE (GT500EE)			
		**********			
	7-621-284-40	SCREW +P 2.6X10			
	7-685-134-19	SCREW +P 2.6X8 TYPE2 NON-SLIT			
	7-685-793-09	SCREW +PTT 2.6X8 (S)			
	7-685-795-09	SCREW +PTT 2.6X12 (S)			
		< CAPACITOR >			
C100	1-112-302-11	ELECT	3300uF	20%	16V (AEP,UK,EE)
C100	1-131-868-81	ELECT	3300uF	20%	16V (EXCEPT AEP,UK,EE)
C101	1-162-964-11	CERAMIC CHIP	0.001uF	10%	50V
C102	1-115-340-11	CERAMIC CHIP	0.22uF	10%	25V
C103	1-162-964-11	CERAMIC CHIP	0.001uF	10%	50V
C112	1-163-009-11	CERAMIC CHIP	0.001uF	10%	50V
C150	1-126-964-11	ELECT	10uF	20%	50V
C151	1-162-970-11	CERAMIC CHIP	0.01uF	10%	25V
C152	1-126-964-11	ELECT	10uF	20%	50V
C153	1-162-970-11	CERAMIC CHIP	0.01uF	10%	25V
C154	1-115-340-11	CERAMIC CHIP	0.22uF	10%	25V
C155	1-126-964-11	ELECT	10uF	20%	50V
C156	1-126-964-11	ELECT	10uF	20%	50V
C157	1-162-970-11	CERAMIC CHIP	0.01uF	10%	25V
C158	1-162-927-11	CERAMIC CHIP	100PF	5%	50V
C159	1-162-927-11	CERAMIC CHIP	100PF	5%	50V
C160	1-115-340-11	CERAMIC CHIP	0.22uF	10%	25V
C161	1-115-340-11	CERAMIC CHIP	0.22uF	10%	25V
C162	1-115-340-11	CERAMIC CHIP	0.22uF	10%	25V
C163	1-162-970-11	CERAMIC CHIP	0.01uF	10%	25V
C164	1-126-964-11	ELECT	10uF	20%	50V
C165	1-126-961-11	ELECT	2.2uF	20%	50V
C166	1-162-927-11	CERAMIC CHIP	100PF	5%	50V
C167	1-162-927-11	CERAMIC CHIP	100PF	5%	50V
C168	1-162-970-11	CERAMIC CHIP	0.01uF	10%	25V
C169	1-126-964-11	ELECT	10uF	20%	50V
C170	1-162-970-11	CERAMIC CHIP	0.01uF	10%	25V
C171	1-162-923-11	CERAMIC CHIP	47PF	5%	50V
C172	1-128-551-11	ELECT	22uF	20%	63V (EXCEPT AEP,UK,EE)
C172	1-124-695-85	ELECT	22uF	20%	25V (AEP,UK,EE)
C173	1-127-715-11	CERAMIC CHIP	0.22uF	10%	16V
C174	1-115-340-11	CERAMIC CHIP	0.22uF	10%	25V
C175	1-115-340-11	CERAMIC CHIP	0.22uF	10%	25V
C200	1-163-009-11	CERAMIC CHIP	0.001uF	10%	50V
C201	1-107-826-11	CERAMIC CHIP	0.1uF	10%	16V
C202	1-126-960-11	ELECT	1uF	20%	50V
C203	1-126-960-11	ELECT	1uF	20%	50V
C204	1-126-960-11	ELECT	1uF	20%	50V
C205	1-124-717-85	ELECT	1uF	20%	50V (AEP,UK,EE)
C205	1-126-960-11	ELECT	1uF	20%	50V (EXCEPT AEP,UK,EE)
C206	1-124-717-85	ELECT	1uF	20%	50V (AEP,UK,EE)
C206	1-126-960-11	ELECT	1uF	20%	50V (EXCEPT AEP,UK,EE)
C209	1-165-908-11	CERAMIC CHIP	1uF	10%	10V
C210	1-165-908-11	CERAMIC CHIP	1uF	10%	10V
C211	1-124-721-85	ELECT	10uF	20%	50V (AEP,UK,EE)
C211	1-126-964-11	ELECT	10uF	20%	50V (EXCEPT AEP,UK,EE)
C217	1-163-251-11	CERAMIC CHIP	100PF	5%	50V
C219	1-162-970-11	CERAMIC CHIP	0.01uF	10%	25V
C220	1-163-251-11	CERAMIC CHIP	100PF	5%	50V
C221	1-124-673-85	ELECT	100uF	20%	10V (AEP,UK,EE)
C221	1-126-933-11	ELECT	100uF	20%	16V (EXCEPT AEP,UK,EE)
C223	1-163-251-11	CERAMIC CHIP	100PF	5%	50V
C224	1-124-721-85	ELECT	10uF	20%	50V (AEP,UK,EE)
C224	1-126-964-11	ELECT	10uF	20%	50V (EXCEPT AEP,UK,EE)
C225	1-124-721-85	ELECT	10uF	20%	50V (AEP,UK,EE)
C225	1-126-964-11	ELECT	10uF	20%	50V (EXCEPT AEP,UK,EE)
C226	1-124-721-85	ELECT	10uF	20%	50V (AEP,UK,EE)
C226	1-126-964-11	ELECT	10uF	20%	50V (EXCEPT AEP,UK,EE)
C227	1-124-721-85	ELECT	10uF	20%	50V (AEP,UK,EE)
C227	1-126-964-11	ELECT	10uF	20%	50V (EXCEPT AEP,UK,EE)
C228	1-124-721-85	ELECT	10uF	20%	50V (AEP,UK,EE)
C228	1-126-964-11	ELECT	10uF	20%	50V (EXCEPT AEP,UK,EE)
C229	1-163-251-11	CERAMIC CHIP	100PF	5%	50V
C230	1-163-251-11	CERAMIC CHIP	100PF	5%	50V
C231	1-163-251-11	CERAMIC CHIP	100PF	5%	50V
C232	1-163-009-11	CERAMIC CHIP	0.001uF	10%	50V
C233	1-165-908-11	CERAMIC CHIP	1uF	10%	10V
C234	1-165-908-11	CERAMIC CHIP	1uF	10%	10V
C235	1-165-908-11	CERAMIC CHIP	1uF	10%	10V
C236	1-165-908-11	CERAMIC CHIP	1uF	10%	10V
C237	1-165-908-11	CERAMIC CHIP	1uF	10%	10V
C238	1-165-908-11	CERAMIC CHIP	1uF	10%	10V
C239	1-165-908-11	CERAMIC CHIP	1uF	10%	10V
C240	1-165-908-11	CERAMIC CHIP	1uF	10%	10V
C245	1-136-154-00	FILM	0.012uF	5%	50V
C246	1-162-965-11	CERAMIC CHIP	0.0015uF	10%	50V
C250	1-126-947-11	ELECT	47uF	20%	35V
C255	1-136-154-00	FILM	0.012uF	5%	50V
C256	1-162-965-11	CERAMIC CHIP	0.0015uF	10%	50V
C257	1-162-927-11	CERAMIC CHIP	100PF	5%	50V
C300	1-162-964-11	CERAMIC CHIP	0.001uF	10%	50V
C301	1-162-964-11	CERAMIC CHIP	0.001uF	10%	50V
C302	1-126-963-11	ELECT	4.7uF	20%	50V (AEP,UK)
C304	1-107-826-11	CERAMIC CHIP	0.1uF	10%	16V (EXCEPT AEP,UK)
C305	1-126-947-11	ELECT	47uF	20%	35V

MAIN

Ref. No.	Part No.	Description			Remark
C306	1-162-970-11	CERAMIC CHIP	0.01uF	10%	25V
C307	1-126-947-11	ELECT	47uF	20%	35V
C308	1-162-970-11	CERAMIC CHIP	0.01uF	10%	25V
C309	1-162-970-11	CERAMIC CHIP	0.01uF	10%	25V
C310	1-107-826-11	CERAMIC CHIP	0.1uF	10%	16V
C350	1-162-923-11	CERAMIC CHIP	47PF	5%	50V (AEP,UK)
C352	1-216-864-11	SHORT CHIP	0 (AEP,UK)		
C353	1-162-970-11	CERAMIC CHIP	0.01uF	10%	25V (AEP,UK)
C354	1-126-947-11	ELECT	47uF	20%	35V (AEP,UK)
C355	1-107-826-11	CERAMIC CHIP	0.1uF	10%	16V (AEP,UK)
C356	1-107-826-11	CERAMIC CHIP	0.1uF	10%	16V (AEP,UK)
C357	1-107-826-11	CERAMIC CHIP	0.1uF	10%	16V (AEP,UK)
C358	1-107-826-11	CERAMIC CHIP	0.1uF	10%	16V (AEP,UK)
C359	1-107-826-11	CERAMIC CHIP	0.1uF	10%	16V (AEP,UK)
C360	1-107-826-11	CERAMIC CHIP	0.1uF	10%	16V (AEP,UK)
C361	1-162-959-11	CERAMIC CHIP	330PF	5%	50V (AEP,UK)
C362	1-164-237-11	CERAMIC CHIP	16PF	5%	50V (AEP,UK)
C363	1-164-237-11	CERAMIC CHIP	16PF	5%	50V (AEP,UK)
C401	1-128-551-11	ELECT	22uF	20%	63V
C402	1-162-970-11	CERAMIC CHIP	0.01uF	10%	25V
C403	1-162-970-11	CERAMIC CHIP	0.01uF	10%	25V
C404	1-126-964-11	ELECT	10uF	20%	50V
C405	1-128-551-11	ELECT	22uF	20%	63V
C406	1-162-970-11	CERAMIC CHIP	0.01uF	10%	25V
C407	1-162-970-11	CERAMIC CHIP	0.01uF	10%	25V
C408	1-124-673-85	ELECT	100uF	20%	10V (AEP,UK,EE)
C408	1-126-933-11	ELECT	100uF	20%	16V (EXCEPT AEP,UK,EE)
C450	1-162-970-11	CERAMIC CHIP	0.01uF	10%	25V
C451	1-126-935-11	ELECT	470uF	20%	16V
C453	1-162-970-11	CERAMIC CHIP	0.01uF	10%	25V
C500	1-126-961-11	ELECT	2.2uF	20%	50V
C510	1-126-963-11	ELECT	4.7uF	20%	50V
C600	1-162-970-11	CERAMIC CHIP	0.01uF	10%	25V
C601	1-162-970-11	CERAMIC CHIP	0.01uF	10%	25V
C604	1-126-933-11	ELECT	100uF	20%	16V
C605	1-162-970-11	CERAMIC CHIP	0.01uF	10%	25V
C610	1-135-834-11	CERAMIC CHIP	2.2uF		6.3V
C611	1-135-834-11	CERAMIC CHIP	2.2uF		6.3V
C612	1-162-964-11	CERAMIC CHIP	0.001uF	10%	50V
C620	1-126-933-11	ELECT	100uF	20%	16V
C621	1-128-552-11	ELECT	47uF	20%	63V
C622	1-126-934-11	ELECT	220uF	20%	16V
C624	1-107-826-11	CERAMIC CHIP	0.1uF	10%	16V
C625	1-162-966-11	CERAMIC CHIP	0.0022uF	10%	50V
C626	1-126-964-11	ELECT	10uF	20%	50V
C627	1-164-315-11	CERAMIC CHIP	470PF	5%	50V
C628	1-107-826-11	CERAMIC CHIP	0.1uF	10%	16V
C629	1-126-933-11	ELECT	100uF	20%	16V
C642	1-107-826-11	CERAMIC CHIP	0.1uF	10%	16V
C644	1-162-964-11	CERAMIC CHIP	0.001uF	10%	50V
C700	1-126-933-11	ELECT	100uF	20%	16V
C701	1-162-970-11	CERAMIC CHIP	0.01uF	10%	25V
C702	1-162-970-11	CERAMIC CHIP	0.01uF	10%	25V
C703	1-126-924-11	ELECT	330uF	20%	10V
C704	1-126-926-11	ELECT	1000uF	20%	10V
C705	1-163-009-11	CERAMIC CHIP	0.001uF	10%	50V
C710	1-162-927-11	CERAMIC CHIP	100PF	5%	50V
C713	1-107-826-11	CERAMIC CHIP	0.1uF	10%	16V
C714	1-126-964-11	ELECT	10uF	20%	50V
C715	1-162-970-11	CERAMIC CHIP	0.01uF	10%	25V
C716	1-162-917-11	CERAMIC CHIP	15PF	5%	50V
C717	1-162-917-11	CERAMIC CHIP	15PF	5%	50V
C718	1-162-970-11	CERAMIC CHIP	0.01uF	10%	25V
C719	1-162-970-11	CERAMIC CHIP	0.01uF	10%	25V
C720	1-162-970-11	CERAMIC CHIP	0.01uF	10%	25V
C721	1-162-970-11	CERAMIC CHIP	0.01uF	10%	25V
C724	1-162-970-11	CERAMIC CHIP	0.01uF	10%	25V
C725	1-162-964-11	CERAMIC CHIP	0.001uF	10%	50V
C726	1-162-964-11	CERAMIC CHIP	0.001uF	10%	50V
C727	1-162-964-11	CERAMIC CHIP	0.001uF	10%	50V
C728	1-162-964-11	CERAMIC CHIP	0.001uF	10%	50V
C729	1-162-964-11	CERAMIC CHIP	0.001uF	10%	50V
C730	1-162-964-11	CERAMIC CHIP	0.001uF	10%	50V
C731	1-162-964-11	CERAMIC CHIP	0.001uF	10%	50V
C733	1-162-970-11	CERAMIC CHIP	0.01uF	10%	25V
C903	1-162-970-11	CERAMIC CHIP	0.01uF	10%	25V
C904	1-162-970-11	CERAMIC CHIP	0.01uF	10%	25V
		< CONNECTOR >			
CN100	1-774-701-21	PIN, CONNECTOR 16P			
* CN200	1-564-506-11	PLUG, CONNECTOR 3P			
CN400	1-817-536-11	CONNECTOR, BOARD TO BOARD 28P			
CN610	1-569-915-11	SOCKET, CONNECTOR 22P			
CNJ450	1-580-907-41	PLUG, CONNECTOR (BUS CONTROL IN)			
		< DIODE >			
D100	6-501-170-01	DIODE UDZW-TE17-6.8B			
D101	8-719-049-38	DIODE 1N5404TU			
D102	6-501-180-01	DIODE UDZW-TE17-18B			
D103	6-501-180-01	DIODE UDZW-TE17-18B			
D104	6-501-180-01	DIODE UDZW-TE17-18B			
D105	6-501-180-01	DIODE UDZW-TE17-18B			
D106	6-501-180-01	DIODE UDZW-TE17-18B			
D107	6-501-362-01	DIODE 1A4-TA26			
D108	6-501-362-01	DIODE 1A4-TA26			
D109	6-501-362-01	DIODE 1A4-TA26			
D110	6-501-362-01	DIODE 1A4-TA26			
D111	6-501-362-01	DIODE 1A4-TA26			
D112	6-501-362-01	DIODE 1A4-TA26			
D113	6-501-362-01	DIODE 1A4-TA26			
D114	6-501-362-01	DIODE 1A4-TA26			
D115	6-501-362-01	DIODE 1A4-TA26			
D116	6-501-362-01	DIODE 1A4-TA26			
D117	6-501-362-01	DIODE 1A4-TA26			

MAIN

Ref. No.	Part No.	Description	Remark
D118	6-501-362-01	DIODE 1A4-TA26	
D200	6-501-170-01	DIODE UDZW-TE17-6.8B	
D250	6-501-051-01	DIODE BAT54CLT1G	
D252	6-501-193-01	DIODE 1SS355WTE-17	
D300	6-501-168-01	DIODE UDZW-TE17-5.6B	
D450	6-501-180-01	DIODE UDZW-TE17-18B	
D452	6-501-180-01	DIODE UDZW-TE17-18B	
D453	6-501-180-01	DIODE UDZW-TE17-18B	
D454	6-501-169-01	DIODE UDZW-TE17-6.2B	
D455	8-719-072-70	DIODE MA2ZD14001S0	
D456	6-501-180-01	DIODE UDZW-TE17-18B	
D457	6-501-051-01	DIODE BAT54CLT1G	
D510	6-501-193-01	DIODE 1SS355WTE-17	
D610	6-500-886-01	DIODE RSA6.1ENTR	
D611	6-500-886-01	DIODE RSA6.1ENTR	
D612	6-500-886-01	DIODE RSA6.1ENTR	
D613	6-501-180-01	DIODE UDZW-TE17-18B	
D614	6-501-180-01	DIODE UDZW-TE17-18B	
D616	6-501-170-01	DIODE UDZW-TE17-6.8B	
D620	8-719-053-18	DIODE 1SR154-400TE-25	
D621	8-719-053-18	DIODE 1SR154-400TE-25	
D622	6-501-089-01	DIODE RF101L2STE25	
D624	8-719-067-83	DIODE RB161L-40TE25	
D625	6-501-180-01	DIODE UDZW-TE17-18B	
D626	6-501-167-01	DIODE UDZW-TE17-5.1B	
D627	6-501-173-01	DIODE UDZW-TE17-9.1B	
D710	6-501-013-01	DIODE BAT54ALT1G	
D711	6-501-013-01	DIODE BAT54ALT1G	
D712	6-501-013-01	DIODE BAT54ALT1G	
D713	8-719-060-48	DIODE RB751V-40TE-17	
		< RESISTOR>	
FB301	1-216-295-11	SHORT CHIP 0	
		< IC >	
IC150	6-705-359-02	IC TDA8588AJ/N2/R1	
IC350	6-803-747-01	IC TDA7333013TR (AEP,UK)	
IC401	6-707-303-01	IC TDA7419TR	
IC450	6-703-884-01	IC BA8271F-E2	
IC600	6-707-281-01	IC MM1613DNLE	
IC620	6-705-542-01	IC NJM2377M(TE2)	
IC700	6-705-373-01	IC MM3123DPLE	
IC710	8-759-659-13	IC PST3428UL	
IC711	6-806-151-01	IC MB90487APF-G-162E1	
		< JACK >	
J200	1-774-700-11	JACK, PIN 6P (BUS AUDIO IN, AUDIO OUT REAR/FRONT)	
J300	1-815-185-13	JACK (ANTENNA)	
J530	1-566-822-41	JACK (REMOTE IN)	
		< COIL >	
L100	1-456-617-11	COIL, CHOKE	
L200	1-469-844-11	INDUCTOR 2.2uH	
L201	1-216-864-11	SHORT CHIP 0	
L300	1-216-295-11	SHORT CHIP 0	
L302	1-216-295-11	SHORT CHIP 0	
L350	1-414-760-21	INDUCTOR, FERRITE BEAD (AEP,UK)	
L351	1-414-760-21	INDUCTOR, FERRITE BEAD (AEP,UK)	
L355	1-469-844-11	INDUCTOR 2.2uH (AEP,UK)	
L400	1-500-245-11	INDUCTOR, FERRITE BEAD	
L401	1-469-876-11	INDUCTOR, FERRITE BEAD	
L402	1-216-295-11	SHORT CHIP 0	
L403	1-216-864-11	SHORT CHIP 0	
L404	1-500-245-11	INDUCTOR, FERRITE BEAD	
L405	1-469-876-11	INDUCTOR, FERRITE BEAD	
L406	1-216-864-11	SHORT CHIP 0	
L407	1-216-864-11	SHORT CHIP 0	
L408	1-469-876-11	INDUCTOR, FERRITE BEAD	
L409	1-500-245-11	INDUCTOR, FERRITE BEAD	
L410	1-469-876-11	INDUCTOR, FERRITE BEAD	
L411	1-216-295-11	SHORT CHIP 0	
L620	1-457-073-11	INDUCTOR 47uH	
L901	1-469-844-11	INDUCTOR 2.2uH	
L902	1-469-844-11	INDUCTOR 2.2uH	
		< TRANSISTOR >	
Q200	6-550-683-01	FET RJK005N03-T146	
Q201	6-550-752-01	TRANSISTOR DTC614TKT146	
Q202	6-550-752-01	TRANSISTOR DTC614TKT146	
Q203	6-550-752-01	TRANSISTOR DTC614TKT146	
Q204	6-550-752-01	TRANSISTOR DTC614TKT146	
Q205	6-550-752-01	TRANSISTOR DTC614TKT146	
Q250	1-801-806-11	TRANSISTOR DTC144EKA	
Q251	8-729-027-23	TRANSISTOR DTA114EKA-T146	
Q300	1-801-806-11	TRANSISTOR DTC144EKA (AEP,UK)	
Q301	6-551-431-01	TRANSISTOR 2SC6027T100-QR	
Q350	8-729-026-49	TRANSISTOR 2SA1037AK-T146-R (AEP,UK)	
Q453	8-729-027-23	TRANSISTOR DTA114EKA-T146	
Q454	8-729-047-76	TRANSISTOR FMC2A-T148	
Q455	8-729-027-43	TRANSISTOR DTC114EKA-T146	
Q500	8-729-120-28	TRANSISTOR 2SC1623-L5L6	
Q510	8-729-120-28	TRANSISTOR 2SC1623-L5L6	
Q520	8-729-120-28	TRANSISTOR 2SC1623-L5L6	
Q601	8-729-047-76	TRANSISTOR FMC2A-T148	
Q620	6-551-131-01	FET 2SK3614-TD-E	
Q621	8-729-027-23	TRANSISTOR DTA114EKA-T146	
Q622	1-801-806-11	TRANSISTOR DTC144EKA	
Q623	1-801-806-11	TRANSISTOR DTC144EKA	
Q641	1-801-806-11	TRANSISTOR DTC144EKA	
Q642	8-729-027-23	TRANSISTOR DTA114EKA-T146	
Q643	8-729-120-28	TRANSISTOR 2SC1623-L5L6	
Q710	8-729-027-23	TRANSISTOR DTA114EKA-T146	
		< RESISTOR >	
R100	1-216-073-00	RES-CHIP 10K 5% 1/10W	
R101	1-249-425-11	CARBON 4.7K 5% 1/4W	
R102	1-249-425-11	CARBON 4.7K 5% 1/4W	
R103	1-216-821-11	METAL CHIP 1K 5% 1/10W	
R152	1-216-811-11	METAL CHIP 150 5% 1/10W	
R153	1-216-841-11	METAL CHIP 47K 5% 1/10W	
R200	1-216-809-11	METAL CHIP 100 5% 1/10W	
R201	1-216-833-11	METAL CHIP 10K 5% 1/10W	
R202	1-216-825-11	METAL CHIP 2.2K 5% 1/10W	
R203	1-216-789-11	METAL CHIP 2.2 5% 1/10W	

MAIN

Ref. No.	Part No.	Description			Remark
R204	1-216-825-11	METAL CHIP	2.2K	5%	1/10W
R205	1-216-833-11	METAL CHIP	10K	5%	1/10W
R206	1-216-833-11	METAL CHIP	10K	5%	1/10W
R207	1-216-809-11	METAL CHIP	100	5%	1/10W
R208	1-216-809-11	METAL CHIP	100	5%	1/10W
R209	1-216-809-11	METAL CHIP	100	5%	1/10W
R210	1-216-809-11	METAL CHIP	100	5%	1/10W
R214	1-216-809-11	METAL CHIP	100	5%	1/10W
R215	1-216-809-11	METAL CHIP	100	5%	1/10W
R216	1-216-809-11	METAL CHIP	100	5%	1/10W
R217	1-216-809-11	METAL CHIP	100	5%	1/10W
R218	1-216-809-11	METAL CHIP	100	5%	1/10W
R220	1-216-809-11	METAL CHIP	100	5%	1/10W
R221	1-216-809-11	METAL CHIP	100	5%	1/10W
R222	1-216-809-11	METAL CHIP	100	5%	1/10W
R223	1-216-809-11	METAL CHIP	100	5%	1/10W
R224	1-216-809-11	METAL CHIP	100	5%	1/10W
R225	1-216-833-11	METAL CHIP	10K	5%	1/10W
R226	1-216-833-11	METAL CHIP	10K	5%	1/10W
R227	1-216-833-11	METAL CHIP	10K	5%	1/10W
R228	1-216-833-11	METAL CHIP	10K	5%	1/10W
R229	1-216-833-11	METAL CHIP	10K	5%	1/10W
R230	1-216-864-11	SHORT CHIP	0		
R231	1-216-864-11	SHORT CHIP	0		
R232	1-216-864-11	SHORT CHIP	0		
R233	1-216-864-11	SHORT CHIP	0		
R245	1-216-833-11	METAL CHIP	10K	5%	1/10W
R246	1-216-833-11	METAL CHIP	10K	5%	1/10W
R251	1-216-805-11	METAL CHIP	47	5%	1/10W
R255	1-216-833-11	METAL CHIP	10K	5%	1/10W
R256	1-216-833-11	METAL CHIP	10K	5%	1/10W
R262	1-216-864-11	SHORT CHIP	0		
R300	1-216-843-11	METAL CHIP	68K	5%	1/10W
R301	1-216-839-11	METAL CHIP	33K	5%	1/10W
R302	1-216-809-11	METAL CHIP	100	5%	1/10W (AEP,UK)
R303	1-216-843-11	METAL CHIP	68K	5%	1/10W
R304	1-216-839-11	METAL CHIP	33K	5%	1/10W
R305	1-216-843-11	METAL CHIP	68K	5%	1/10W
R306	1-216-839-11	METAL CHIP	33K	5%	1/10W (AEP,UK)
R307	1-414-760-21	INDUCTOR, FERRITE BEAD			
R308	1-414-760-21	INDUCTOR, FERRITE BEAD			
R309	1-414-760-21	INDUCTOR, FERRITE BEAD			
R310	1-414-760-21	INDUCTOR, FERRITE BEAD			
R311	1-216-821-11	METAL CHIP	1K	5%	1/10W
R350	1-216-821-11	METAL CHIP	1K	5%	1/10W (AEP,UK)
R351	1-216-833-11	METAL CHIP	10K	5%	1/10W (AEP,UK)
R352	1-216-797-11	METAL CHIP	10	5%	1/10W (AEP,UK)
R353	1-216-797-11	METAL CHIP	10	5%	1/10W (AEP,UK)
R354	1-216-845-11	METAL CHIP	100K	5%	1/10W (AEP,UK)
R355	1-216-801-11	METAL CHIP	22	5%	1/10W (AEP,UK)
R356	1-216-864-11	SHORT CHIP	0 (AEP,UK)		
R357	1-216-864-11	SHORT CHIP	0 (AEP,UK)		
R358	1-216-797-11	METAL CHIP	10	5%	1/10W (AEP,UK)
R359	1-216-864-11	SHORT CHIP	0 (AEP,UK)		
R400	1-216-864-11	SHORT CHIP	0		
R401	1-216-801-11	METAL CHIP	22	5%	1/10W
R402	1-216-801-11	METAL CHIP	22	5%	1/10W
R403	1-216-801-11	METAL CHIP	22	5%	1/10W
R404	1-216-801-11	METAL CHIP	22	5%	1/10W
R405	1-216-801-11	METAL CHIP	22	5%	1/10W
R406	1-216-864-11	SHORT CHIP	0		
R407	1-216-864-11	SHORT CHIP	0		
R450	1-216-864-11	SHORT CHIP	0		
R453	1-216-864-11	SHORT CHIP	0		
R455	1-216-864-11	SHORT CHIP	0		
R456	1-216-829-11	METAL CHIP	4.7K	5%	1/10W
R457	1-216-821-11	METAL CHIP	1K	5%	1/10W
R458	1-216-821-11	METAL CHIP	1K	5%	1/10W
R459	1-216-835-11	METAL CHIP	15K	5%	1/10W
R461	1-216-821-11	METAL CHIP	1K	5%	1/10W
R500	1-216-841-11	METAL CHIP	47K	5%	1/10W
R501	1-216-841-11	METAL CHIP	47K	5%	1/10W
R502	1-216-829-11	METAL CHIP	4.7K	5%	1/10W
R510	1-216-845-11	METAL CHIP	100K	5%	1/10W
R511	1-216-837-11	METAL CHIP	22K	5%	1/10W
R520	1-216-841-11	METAL CHIP	47K	5%	1/10W
R521	1-216-833-11	METAL CHIP	10K	5%	1/10W
R522	1-216-833-11	METAL CHIP	10K	5%	1/10W
R530	1-216-809-11	METAL CHIP	100	5%	1/10W
R531	1-216-809-11	METAL CHIP	100	5%	1/10W
R532	1-216-864-11	SHORT CHIP	0		
R605	1-216-029-00	RES-CHIP	150	5%	1/10W
R606	1-216-029-00	RES-CHIP	150	5%	1/10W
R607	1-216-029-00	RES-CHIP	150	5%	1/10W
R610	1-216-809-11	METAL CHIP	100	5%	1/10W
R611	1-216-809-11	METAL CHIP	100	5%	1/10W
R612	1-216-809-11	METAL CHIP	100	5%	1/10W
R613	1-216-809-11	METAL CHIP	100	5%	1/10W
R614	1-216-809-11	METAL CHIP	100	5%	1/10W
R615	1-216-809-11	METAL CHIP	100	5%	1/10W
R616	1-216-809-11	METAL CHIP	100	5%	1/10W
R617	1-216-809-11	METAL CHIP	100	5%	1/10W
R618	1-216-809-11	METAL CHIP	100	5%	1/10W
R619	1-216-841-11	METAL CHIP	47K	5%	1/10W
R620	1-216-841-11	METAL CHIP	47K	5%	1/10W
R621	1-216-841-11	METAL CHIP	47K	5%	1/10W
R622	1-218-863-11	METAL CHIP	4.7K	0.5%	1/10W
R623	1-218-895-11	METAL CHIP	100K	0.5%	1/10W
R624	1-218-847-11	METAL CHIP	1K	0.5%	1/10W
R625	1-216-805-11	METAL CHIP	47	5%	1/10W
R626	1-216-841-11	METAL CHIP	47K	5%	1/10W
R627	1-216-846-11	METAL CHIP	120K	5%	1/10W
R628	1-216-841-11	METAL CHIP	47K	5%	1/10W
R629	1-216-833-11	METAL CHIP	10K	5%	1/10W
R630	1-216-837-11	METAL CHIP	22K	5%	1/10W
R631	1-216-821-11	METAL CHIP	1K	5%	1/10W
R632	1-216-823-11	METAL CHIP	1.5K	5%	1/10W

Ref. No.	Part No.	Description			Remark
R633	1-216-821-11	METAL CHIP	1K	5%	1/10W
R634	1-216-848-11	METAL CHIP	180K	5%	1/10W
R635	1-216-864-11	SHORT CHIP	0		
R636	1-216-839-11	METAL CHIP	33K	5%	1/10W
R637	1-216-809-11	METAL CHIP	100	5%	1/10W
R638	1-216-864-11	SHORT CHIP	0		
R639	1-216-134-00	RES-CHIP	2.2	5%	1/8W
R642	1-216-174-00	RES-CHIP	100	5%	1/8W
R643	1-216-864-11	SHORT CHIP	0		
R644	1-216-801-11	METAL CHIP	22	5%	1/10W
R645	1-216-134-00	RES-CHIP	2.2	5%	1/8W
R648	1-216-813-11	METAL CHIP	220	5%	1/10W
R650	1-216-295-11	SHORT CHIP	0		
R651	1-216-134-00	RES-CHIP	2.2	5%	1/8W
R652	1-216-821-11	METAL CHIP	1K	5%	1/10W
R653	1-216-864-11	SHORT CHIP	0		
R654	1-216-174-00	RES-CHIP	100	5%	1/8W
R655	1-216-174-00	RES-CHIP	100	5%	1/8W
R711	1-216-849-11	METAL CHIP	220K	5%	1/10W
R712	1-216-849-11	METAL CHIP	220K	5%	1/10W
R713	1-216-845-11	METAL CHIP	100K	5%	1/10W
R715	1-216-845-11	METAL CHIP	100K	5%	1/10W (GT550)
R716	1-216-845-11	METAL CHIP	100K	5%	1/10W (GT550)
R717	1-216-845-11	METAL CHIP	100K	5%	1/10W
R718	1-216-809-11	METAL CHIP	100	5%	1/10W
R719	1-216-845-11	METAL CHIP	100K	5%	1/10W (GT500EE)
R720	1-216-845-11	METAL CHIP	100K	5%	1/10W (US,CND,EE)
R721	1-216-845-11	METAL CHIP	100K	5%	1/10W (AEP,UK,EE)
R722	1-216-845-11	METAL CHIP	100K	5%	1/10W (EXCEPT AEP,UK,EE)
R723	1-216-845-11	METAL CHIP	100K	5%	1/10W (AEP,UK,E,CH,MX)
R724	1-216-845-11	METAL CHIP	100K	5%	1/10W (GT50W/GT500)
R725	1-216-845-11	METAL CHIP	100K	5%	1/10W
R726	1-216-845-11	METAL CHIP	100K	5%	1/10W
R727	1-216-845-11	METAL CHIP	100K	5%	1/10W
R728	1-216-833-11	METAL CHIP	10K	5%	1/10W
R729	1-216-845-11	METAL CHIP	100K	5%	1/10W
R730	1-216-845-11	METAL CHIP	100K	5%	1/10W
R731	1-216-845-11	METAL CHIP	100K	5%	1/10W
R732	1-216-809-11	METAL CHIP	100	5%	1/10W
R733	1-216-845-11	METAL CHIP	100K	5%	1/10W
R734	1-216-809-11	METAL CHIP	100	5%	1/10W
R735	1-216-845-11	METAL CHIP	100K	5%	1/10W
R736	1-216-809-11	METAL CHIP	100	5%	1/10W
R737	1-216-845-11	METAL CHIP	100K	5%	1/10W
R738	1-216-845-11	METAL CHIP	100K	5%	1/10W
R742	1-216-845-11	METAL CHIP	100K	5%	1/10W
R743	1-216-809-11	METAL CHIP	100	5%	1/10W
R745	1-216-845-11	METAL CHIP	100K	5%	1/10W
R746	1-216-841-11	METAL CHIP	47K	5%	1/10W
R747	1-216-841-11	METAL CHIP	47K	5%	1/10W
R748	1-216-845-11	METAL CHIP	100K	5%	1/10W
R749	1-216-809-11	METAL CHIP	100	5%	1/10W
R750	1-216-809-11	METAL CHIP	100	5%	1/10W
R751	1-216-845-11	METAL CHIP	100K	5%	1/10W
R752	1-216-845-11	METAL CHIP	100K	5%	1/10W
R753	1-216-841-11	METAL CHIP	47K	5%	1/10W
R754	1-216-841-11	METAL CHIP	47K	5%	1/10W
R755	1-216-809-11	METAL CHIP	100	5%	1/10W
R757	1-216-809-11	METAL CHIP	100	5%	1/10W
R758	1-216-845-11	METAL CHIP	100K	5%	1/10W
R759	1-216-809-11	METAL CHIP	100	5%	1/10W
R760	1-216-841-11	METAL CHIP	47K	5%	1/10W
R761	1-216-845-11	METAL CHIP	100K	5%	1/10W
R762	1-216-845-11	METAL CHIP	100K	5%	1/10W
R763	1-216-813-11	METAL CHIP	220	5%	1/10W
R764	1-216-813-11	METAL CHIP	220	5%	1/10W
R765	1-216-809-11	METAL CHIP	100	5%	1/10W
R766	1-216-809-11	METAL CHIP	100	5%	1/10W
R767	1-216-809-11	METAL CHIP	100	5%	1/10W
R768	1-216-845-11	METAL CHIP	100K	5%	1/10W
R769	1-216-825-11	METAL CHIP	2.2K	5%	1/10W
R770	1-216-825-11	METAL CHIP	2.2K	5%	1/10W
R771	1-218-871-11	METAL CHIP	10K	0.5%	1/10W
R772	1-218-871-11	METAL CHIP	10K	0.5%	1/10W
R774	1-216-809-11	METAL CHIP	100	5%	1/10W
R775	1-218-871-11	METAL CHIP	10K	0.5%	1/10W
R780	1-216-809-11	METAL CHIP	100	5%	1/10W
R781	1-216-801-11	METAL CHIP	22	5%	1/10W
R782	1-216-801-11	METAL CHIP	22	5%	1/10W
R784	1-216-845-11	METAL CHIP	100K	5%	1/10W (GT50W/GT500/GT550)
R785	1-216-845-11	METAL CHIP	100K	5%	1/10W (GT500EE)

< SWITCH >

S600	1-786-458-11	SWITCH, PUSH (1 KEY) (NOSE DET)
S700	1-692-431-21	SWITCH, TACTILE (RESET)
S710	1-571-478-11	SWITCH, SLIDE (FREQUENCY SELECT) (GT550)

< TRANSFORMER >

T620	1-443-879-11	TRANSFORMER, DC-DC CONVERTER

< THERMISTOR (POSITIVE) >

TH450	1-801-792-21	THERMISTOR, POSITIVE

< TUNER UNIT >

TU300	A-3220-961-B	TUNER UNIT (TUX-032)

< VIBRATOR >

X350	1-813-173-11	VIBRATOR, CRYSTAL (8.664MHz) (AEP,UK)
X710	1-813-524-21	VIBRATOR, CERAMIC (18.432MHz)
X711	1-813-202-11	VIBRATOR, CRYSTAL (32.768kHz)

****

SENSOR SERVO

Ref. No.	Part No.	Description			Remark
		SENSOR BOARD			
		**********			
		< SWITCH >			
SW2	1-529-566-61	SWITCH, PUSH (1 KEY) (SELF)			
SW3	1-529-566-61	SWITCH, PUSH (1 KEY) (DISC IN)			
**********					
	A-1132-412-A	SERVO BOARD, COMPLETE			
		**********			
		< CAPACITOR >			
C7	1-125-777-11	CERAMIC CHIP	0.1uF	10%	10V
C10	1-126-208-21	ELECT CHIP	47uF	20%	4V
C11	1-125-777-11	CERAMIC CHIP	0.1uF	10%	10V
C12	1-125-777-11	CERAMIC CHIP	0.1uF	10%	10V
C13	1-100-567-81	CERAMIC CHIP	0.01uF	10%	25V
C14	1-104-609-11	ELECT CHIP	100uF	20%	4V
C15	1-125-777-11	CERAMIC CHIP	0.1uF	10%	10V
C16	1-162-964-11	CERAMIC CHIP	0.001uF	10%	50V
C17	1-125-777-11	CERAMIC CHIP	0.1uF	10%	10V
C18	1-125-777-11	CERAMIC CHIP	0.1uF	10%	10V
C19	1-125-777-11	CERAMIC CHIP	0.1uF	10%	10V
C20	1-164-677-11	CERAMIC CHIP	0.033uF	10%	16V
C22	1-164-677-11	CERAMIC CHIP	0.033uF	10%	16V
C23	1-125-777-11	CERAMIC CHIP	0.1uF	10%	10V
C24	1-125-777-11	CERAMIC CHIP	0.1uF	10%	10V
C25	1-125-777-11	CERAMIC CHIP	0.1uF	10%	10V
C26	1-162-966-11	CERAMIC CHIP	0.0022uF	10%	50V
C29	1-162-968-11	CERAMIC CHIP	0.0047uF	10%	50V
C30	1-162-968-11	CERAMIC CHIP	0.0047uF	10%	50V
C31	1-125-777-11	CERAMIC CHIP	0.1uF	10%	10V
C32	1-125-777-11	CERAMIC CHIP	0.1uF	10%	10V
C33	1-125-777-11	CERAMIC CHIP	0.1uF	10%	10V
C36	1-125-777-11	CERAMIC CHIP	0.1uF	10%	10V
C39	1-126-208-21	ELECT CHIP	47uF	20%	4V
C40	1-126-395-11	ELECT CHIP	22uF	20%	16V
C41	1-125-777-11	CERAMIC CHIP	0.1uF	10%	10V
C42	1-125-777-11	CERAMIC CHIP	0.1uF	10%	10V
C43	1-100-567-81	CERAMIC CHIP	0.01uF	10%	25V
C44	1-125-777-11	CERAMIC CHIP	0.1uF	10%	10V
C45	1-125-777-11	CERAMIC CHIP	0.1uF	10%	10V
C46	1-162-923-11	CERAMIC CHIP	47PF	5%	50V
C47	1-164-245-11	CERAMIC CHIP	0.015uF	10%	25V
C48	1-100-567-81	CERAMIC CHIP	0.01uF	10%	25V
C49	1-125-777-11	CERAMIC CHIP	0.1uF	10%	10V
C50	1-100-567-81	CERAMIC CHIP	0.01uF	10%	25V
C51	1-125-777-11	CERAMIC CHIP	0.1uF	10%	10V
C52	1-125-777-11	CERAMIC CHIP	0.1uF	10%	10V
C53	1-125-777-11	CERAMIC CHIP	0.1uF	10%	10V
C54	1-100-567-81	CERAMIC CHIP	0.01uF	10%	25V
C55	1-125-777-11	CERAMIC CHIP	0.1uF	10%	10V
C56	1-164-245-11	CERAMIC CHIP	0.015uF	10%	25V
C58	1-125-777-11	CERAMIC CHIP	0.1uF	10%	10V
C60	1-162-964-11	CERAMIC CHIP	0.001uF	10%	50V
C62	1-125-777-11	CERAMIC CHIP	0.1uF	10%	10V
C66	1-100-567-81	CERAMIC CHIP	0.01uF	10%	25V
C67	1-100-567-81	CERAMIC CHIP	0.01uF	10%	25V
C68	1-100-567-81	CERAMIC CHIP	0.01uF	10%	25V
C69	1-100-567-81	CERAMIC CHIP	0.01uF	10%	25V
C70	1-125-777-11	CERAMIC CHIP	0.1uF	10%	10V
C71	1-125-777-11	CERAMIC CHIP	0.1uF	10%	10V
C72	1-125-777-11	CERAMIC CHIP	0.1uF	10%	10V
C80	1-125-837-11	CERAMIC CHIP	1uF	10%	6.3V
C132	1-125-837-11	CERAMIC CHIP	1uF	10%	6.3V
C133	1-125-837-11	CERAMIC CHIP	1uF	10%	6.3V
		< CONNECTOR >			
CN1	1-691-380-61	CONNECTOR, FFC/FPC (ZIF) 16P			
CN2	1-817-275-21	CONNECTOR, BOARD TO BOARD 28P			
		< JUMPER RESISTOR >			
FB2	1-216-864-11	SHORT CHIP	0		
FB3	1-216-864-11	SHORT CHIP	0		
FB4	1-216-864-11	SHORT CHIP	0		
		< IC >			
IC1	6-707-327-01	IC BA5968FP-E2			
IC2	6-708-729-01	IC TC94A70FG-002			
IC3	6-806-019-02	IC MB90486BPFV-G-177E1			
IC6	6-708-728-01	IC BH15LB1WG			
		< TRANSISTOR >			
Q2	6-551-120-01	TRANSISTOR 2SA2119K			
Q3	8-729-928-90	TRANSISTOR DTC114EE			
Q21	8-729-904-87	TRANSISTOR 2SB1197K-R			
		< RESISTOR >			
R1	1-218-965-11	RES-CHIP	10K	5%	1/16W
R2	1-218-977-11	RES-CHIP	100K	5%	1/16W
R5	1-218-969-11	RES-CHIP	22K	5%	1/16W
R6	1-218-969-11	RES-CHIP	22K	5%	1/16W
R7	1-218-990-81	SHORT CHIP	0		
R8	1-218-965-11	RES-CHIP	10K	5%	1/16W
R9	1-218-965-11	RES-CHIP	10K	5%	1/16W
R10	1-218-990-81	SHORT CHIP	0		
R11	1-218-941-81	RES-CHIP	100	5%	1/16W
R12	1-218-969-11	RES-CHIP	22K	5%	1/16W
R13	1-218-969-11	RES-CHIP	22K	5%	1/16W
R14	1-218-929-11	RES-CHIP	10	5%	1/16W
R15	1-218-929-11	RES-CHIP	10	5%	1/16W
R16	1-218-953-11	RES-CHIP	1K	5%	1/16W
R17	1-218-990-81	SHORT CHIP	0		
R18	1-218-941-81	RES-CHIP	100	5%	1/16W
R19	1-218-935-11	RES-CHIP	33	5%	1/16W
R20	1-162-961-11	CERAMIC CHIP	330PF	10%	50V
R21	1-218-941-81	RES-CHIP	100	5%	1/16W
R22	1-218-977-11	RES-CHIP	100K	5%	1/16W
R23	1-218-977-11	RES-CHIP	100K	5%	1/16W
R24	1-218-977-11	RES-CHIP	100K	5%	1/16W
R25	1-218-977-11	RES-CHIP	100K	5%	1/16W
R26	1-218-977-11	RES-CHIP	100K	5%	1/16W
R27	1-218-977-11	RES-CHIP	100K	5%	1/16W
R28	1-218-945-11	RES-CHIP	220	5%	1/16W
R29	1-218-989-11	RES-CHIP	1M	5%	1/16W
R30	1-218-989-11	RES-CHIP	1M	5%	1/16W

SERVO SUB

Ref. No.	Part No.	Description			Remark
R31	1-218-989-11	RES-CHIP	1M	5%	1/16W
R32	1-218-947-11	RES-CHIP	330	5%	1/16W
R33	1-218-990-81	SHORT CHIP	0		
R34	1-216-864-11	SHORT CHIP	0		
R35	1-162-961-11	CERAMIC CHIP	330PF	10%	50V
R36	1-218-947-11	RES-CHIP	330	5%	1/16W
R37	1-218-947-11	RES-CHIP	330	5%	1/16W
R38	1-218-941-81	RES-CHIP	100	5%	1/16W
R39	1-218-941-81	RES-CHIP	100	5%	1/16W
R40	1-218-941-81	RES-CHIP	100	5%	1/16W
R41	1-218-941-81	RES-CHIP	100	5%	1/16W
R42	1-218-977-11	RES-CHIP	100K	5%	1/16W
R43	1-218-961-11	RES-CHIP	4.7K	5%	1/16W
R44	1-218-977-11	RES-CHIP	100K	5%	1/16W
R52	1-218-962-11	RES-CHIP	5.6K	5%	1/16W
R53	1-218-979-11	RES-CHIP	150K	5%	1/16W
R54	1-218-990-81	SHORT CHIP	0		
R55	1-218-973-11	RES-CHIP	47K	5%	1/16W
R57	1-218-967-11	RES-CHIP	15K	5%	1/16W
R58	1-218-969-11	RES-CHIP	22K	5%	1/16W
R60	1-218-941-81	RES-CHIP	100	5%	1/16W
R61	1-218-941-81	RES-CHIP	100	5%	1/16W
R62	1-218-941-81	RES-CHIP	100	5%	1/16W
R63	1-218-977-11	RES-CHIP	100K	5%	1/16W
R64	1-218-977-11	RES-CHIP	100K	5%	1/16W
R65	1-218-977-11	RES-CHIP	100K	5%	1/16W
R67	1-218-941-81	RES-CHIP	100	5%	1/16W
R68	1-218-941-81	RES-CHIP	100	5%	1/16W
R69	1-218-941-81	RES-CHIP	100	5%	1/16W
R70	1-218-965-11	RES-CHIP	10K	5%	1/16W
R71	1-218-973-11	RES-CHIP	47K	5%	1/16W
R72	1-218-973-11	RES-CHIP	47K	5%	1/16W
R73	1-218-973-11	RES-CHIP	47K	5%	1/16W
R74	1-218-941-81	RES-CHIP	100	5%	1/16W
R75	1-218-941-81	RES-CHIP	100	5%	1/16W
R77	1-218-973-11	RES-CHIP	47K	5%	1/16W
R78	1-218-941-81	RES-CHIP	100	5%	1/16W
R79	1-218-941-81	RES-CHIP	100	5%	1/16W
R80	1-218-941-81	RES-CHIP	100	5%	1/16W
R81	1-218-941-81	RES-CHIP	100	5%	1/16W
R82	1-218-941-81	RES-CHIP	100	5%	1/16W
R83	1-218-977-11	RES-CHIP	100K	5%	1/16W
R84	1-218-941-81	RES-CHIP	100	5%	1/16W
R85	1-218-977-11	RES-CHIP	100K	5%	1/16W
R86	1-218-941-81	RES-CHIP	100	5%	1/16W
R87	1-218-977-11	RES-CHIP	100K	5%	1/16W
R96	1-218-941-81	RES-CHIP	100	5%	1/16W
R97	1-220-200-81	RES-CHIP	30K	5%	1/16W
R98	1-218-971-11	RES-CHIP	33K	5%	1/16W
R132	1-218-969-11	RES-CHIP	22K	5%	1/16W
R133	1-218-953-11	RES-CHIP	1K	5%	1/16W
R141	1-216-864-11	SHORT CHIP	0		
R144	1-216-864-11	SHORT CHIP	0		
R147	1-216-864-11	SHORT CHIP	0		
		< SWITCH >			
SW1	1-529-565-61	SWITCH, PUSH (1 KEY) (DOWN)			

Ref. No.	Part No.	Description			Remark
		< VIBRATOR >			
X1	1-813-678-11	OSCILLATOR, CERAMIC (CHIP TYPE) (12MHz)			
X2	1-795-561-21	VIBRATOR, CERAMIC (16.9344MHz)			
**********					
	A-1156-589-A	SUB BOARD, COMPLETE (GT500/GT550)			
	A-1158-907-A	SUB BOARD, COMPLETE (GT50W/GT500EE)			
		**********			
	1-831-502-11	CABLE, FLEXIBLE FLAT (22 CORE) (FFC801)			
		< CONNECTOR >			
CN801	1-818-142-11	SOCKET, CONNECTOR 20P			
		< DIODE >			
LED802	6-500-450-01	LED CL-195SR-CD-T (⏏) (GT500/GT550)			
LED802	6-500-510-01	LED CL-195PG-CD-T (⏏) (GT50W/GT500EE)			
LED803	6-500-450-01	LED CL-195SR-CD-T (CD SLOT) (GT500/GT550)			
LED803	6-500-510-01	LED CL-195PG-CD-T (CD SLOT) (GT50W/GT500EE)			
		< RESISTOR >			
R802	1-216-813-11	METAL CHIP	220	5%	1/10W
R803	1-216-817-11	METAL CHIP	470	5%	1/10W
		< SWITCH >			
S801	1-786-653-21	SWITCH, TACTILE (⏏)			
**********					
		MISCELLANEOUS			
		**********			
13	1-776-207-72	CORD (WITH CONNECTOR) (POWER) (EXCEPT AEP,UK,EE)			
13	1-776-527-71	CORD (WITH CONNECTOR) (ISO) (POWER) (AEP,UK,EE)			
14	1-790-355-54	CORD (WITH CONNECTOR) (RCA) (SUB OUT (MONO))			
⚠153	8-820-207-12	OPTICAL PICK-UP (KSS1000E/K1RP)			
154	A-1075-645-A	CHASSIS (OP) SUB ASSY (including M901)			
F901	1-532-877-11	FUSE (BLADE TYPE) (AUTO FUSE) 10A			
M902	A-3372-447-A	MOTOR ASSY, SL (SLED)			
M903	A-1166-300-A	MOTOR ASSY (B), LE (LOADING)			
SW4	1-571-099-11	SWITCH (1 KEY) (LIMIT)			
**********					

Ref. No.	Part No.	Description	Remark
		ACCESSORIES **********	
	1-479-077-13	REMOTE COMMANDER (RM-X151)	
	2-548-729-01	LID, BATTERY CASE (for RM-X151)	
	2-663-186-11	MANUAL, INSTRUCTION (ENGLISH,FRENCH)	(GT500:US,CND)
	2-663-186-21	MANUAL, INSTRUCTION (ENGLISH,SPANISH)	(GT50W)
	2-663-186-31	MANUAL, INSTRUCTION (ENGLISH,GERMAN, FRENCH,ITALIAN,DUTCH)	(AEP,UK)
	2-663-186-41	MANUAL, INSTRUCTION (ENGLISH,RUSSIAN)	(GT500EE)
	2-663-186-51	MANUAL, INSTRUCTION (ENGLISH,SPANISH, SIMPLIFIED CHINESE)	(GT550)
	2-663-188-11	MANUAL, INSTRUCTION, INSTALL (ENGLISH, FRENCH)	(GT500:US,CND)
	2-663-188-21	MANUAL, INSTRUCTION, INSTALL (ENGLISH, SPANISH)	(GT50W)
	2-663-188-31	MANUAL, INSTRUCTION, INSTALL (ENGLISH, GERMAN,FRENCH,ITALIAN,DUTCH)	(AEP,UK)
	2-663-188-41	MANUAL, INSTRUCTION, INSTALL (ENGLISH, RUSSIAN)	(GT500EE)
	2-663-188-51	MANUAL, INSTRUCTION, INSTALL (ENGLISH, SPANISH,SIMPLIFIED CHINESE)	(GT550)
	X-2055-358-1	CASE ASSY (for FRONT PANEL) (EXCEPT US)	

****

Ref. No.	Part No.	Description	Remark
		PARTS FOR INSTALLATION AND CONNECTIONS **********	
301	X-3382-647-1	FRAME ASSY, FITTING	
302	2-638-099-01	COLLAR	
303	3-246-471-01	KEY (FRAME)	
304	X-3381-154-1	SCREW ASSY (BS4), FITTING	(GT500EE/GT550)
305	X-3382-926-1	SCREW ASSY (BS), FITTING (AEP,UK)	
306	3-349-410-11	BUSHING (EXCEPT US,CND)	
307	3-934-325-01	SCREW, +K (5X8) TAPPING (EXCEPT AEP,UK)	
308	1-465-459-31	ADAPTOR, ANTENNA (AEP,UK,EE)	
309	1-776-207-72	CORD (WITH CONNECTOR) (POWER)	(EXCEPT AEP,UK,EE)
310	1-776-527-71	CORD (WITH CONNECTOR) (ISO) (POWER)	(AEP,UK,EE)

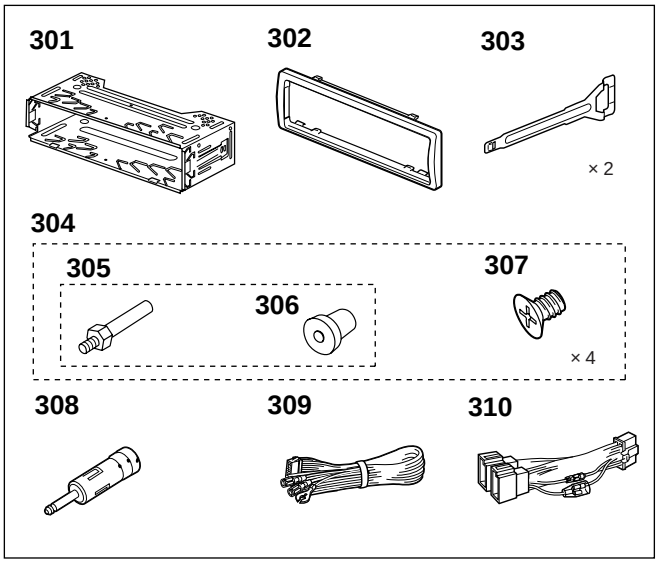

MEMO

REVISION HISTORY

Clicking the version allows you to jump to the revised page.
Also, clicking the version at the upper on the revised page allows you to jump to the next revised page.

Ver.	Date	Description of Revision
1.0	2005. 12	New