D-EJ100/EJ101/EJ101CK/EJ106CK

SERVICE MANUAL

Ver. 1.4 2005.04

Photo : D-EJ100

US Model
Canadian Model
D-EJ100/EJ106CK
AEP Model
UK Model
D-EJ100/EJ101
E Model
D-EJ100/EJ101/EJ101CK
Australian Model
D-EJ100/EJ106CK

Model Name Using Similar Mechanism	New
CD Mechanism Type	CDM-3325ER
Optical Pick-up Type	DAX-25E

SPECIFICATIONS

System
Compact disc digital audio system

Laser diode properties
Material: GaAlAs
Wavelength: £f = 780 nm
Emission duration: Continuous
Laser output: Less than 44.6 µW (This output is the value measured at a distance of 200 mm from the objective lens surface on the optical pick-up block with 7 mm aperture.)

Power requirements
- Two size AA (LR6) batteries: 1.5 V DC x 2
- AC power adaptor (DC IN 4.5 V jack):
  100 - 240 V, 50/60 Hz (AEP, UK, EE, E18, Saudi Arabia, Thai)
  120 V, 60 Hz (US, Canadian, C&SA, Mexican)
  240 V, 50 Hz (Australian)

Dimensions (w/h/d) (without projecting parts and controls)
Approx. 135.8 x 22.8 x 135.8 mm (5 3/8 x 29/32 x 5 3/8 in.)
Approx. 135.8 x 23.5 x 135.8 mm (5 3/8 x 15/16 x 5 3/8 in.)*
*Psyc model

Mass (excluding accessories)
Approx. 180 g (6.4 oz)
Approx. 188 g (6.7 oz)*
*Psyc model

Operating temperature
5°C - 35°C (41°F - 95°F)

Design and specifications are subject to change without notice.

Supplied Accessories

	D-EJ100	D-EJ101	D-EJ101CK/EJ106CK*3
AC power adaptor (1)	○*1	○	○*1
Headphones/earphones (1)	○*1	–	○
Headphones/earphones with remote control (1)	○*2	○	–
Car connecting pack (1)	–	–	○
Car battery cord (1)	–	–	○
Rotary commander (1)	–	–	○
Velcro tapes for the CD player (2)	–	–	○
Velcro tape for the rotary commander (1)	–	–	○
Active speaker system (1)	–	–	–

*1 Not supplied with US and Canadian model
*2 Supplied with US and Canadian model
*3 "Operating Instructions for the car kit" is enclosed.

For the models supplied with the remote control
Use only the supplied remote control. You cannot operate this CD player with the remote control supplied with other CD players.

PORTABLE CD PLAYER

9-961-981-05
2005D02-1
© 2005.04

Sony Corporation
Personal Audio Group
Published by Sony Engineering Corporation

SONY®

DANGER
Invisible laser radiation when open and interlock failed or defeated. Avoid direct exposure to beam.

CAUTION
Use of controls or adjustments or performance of procedures other than those specified herein may result in hazardous radiation exposure.

Flexible Circuit Board Repairing
- Keep the temperature of the soldering iron around 270°C during repairing.
- Do not touch the soldering iron on the same conductor of the circuit board (within 3 times).
- Be careful not to apply force on the conductor when soldering or unsoldering.

Notes on chip component replacement
- Never reuse a disconnected chip component.
- Notice that the minus side of a tantalum capacitor may be damaged by heat.

UNLEADED SOLDER
Boards requiring use of unleaded solder are printed with the lead-free mark (LF) indicating the solder contains no lead.
(Caution: Some printed circuit boards may not come printed with the lead free mark due to their particular size.)

: LEAD FREE MARK
Unleaded solder has the following characteristics.
- Unleaded solder melts at a temperature about 40°C higher than ordinary solder.
  Ordinary soldering irons can be used but the iron tip has to be applied to the solder joint for a slightly longer time.
  Soldering irons using a temperature regulator should be set to about 350°C.
  Caution: The printed pattern (copper foil) may peel away if the heated tip is applied for too long, so be careful!
- Strong viscosity
  Unleaded solder is more viscous (sticky, less prone to flow) than ordinary solder so use caution not to let solder bridges occur such as on IC pins, etc.
- Usable with ordinary solder
  It is best to use only unleaded solder but unleaded solder may also be added to ordinary solder.

TABLE OF CONTENTS

Specifications 1

1. SERVICING NOTES 3

2. GENERAL
Locating the Controls 3

3. DISASSEMBLY
3-1. Upper Lid ASSY, Cabinet (Upper) Sub ASSY, Cabinet (Lower) ASSY 4
3-2. MD ASSY (CDM-3325ER), Main Board 5
3-3. Motor ASSY (Sled) (M902), Optical Pick-up (DAX-25E), Turn Table Motor ASSY(Spindle) (M901) 6

4. ELECTRICAL ADJUSTMENS 7

5. DIAGRAMS
5-1. Block Diagram 8
5-2. Printed Wiring Boards –MAIN Section (Side A)– 9
Printed Wiring Boards –MAIN Section (Side B)– 10
5-3. Schematic Diagram –MAIN SECTION (1/3)– 11
5-4. Schematic Diagram –MAIN SECTION (2/3)– 12
5-5. Schematic Diagram –MAIN SECTION (3/3)– 13
5-6. IC Pin Function Description 16

6. EXPLODED VIEWS
6-1. Upper Lid Section 18
6-2. Cabinet Section 19
6-3. Optical pick-up Section (CDM-3325ER) 20

7. ELECTRICAL PARTS LIST 21

SAFETY-RELATED COMPONENT WARNING!!

COMPONENTS IDENTIFIED BY MARK ⚠ OR DOTTED LINE WITH MARK ⚠ ON THE SCHEMATIC DIAGRAMS AND IN THE PARTS LIST ARE CRITICAL TO SAFE OPERATION. REPLACE THESE COMPONENTS WITH SONY PARTS WHOSE PART NUMBERS APPEAR AS SHOWN IN THIS MANUAL OR IN SUPPLEMENTS PUBLISHED BY SONY.

ATTENTION AU COMPOSANT AYANT RAPPORT À LA SÉCURITÉ!
LES COMPOSANTS IDENTIFÉS PAR UNE MARQUE ⚠ SUR LES DIAGRAMMES SCHÉMATIQUES ET LA LISTE DES PIÈCES SONT CRITIQUES POUR LA SÉCURITÉ DE FONCTIONNEMENT. NE REMPLACER CES COMPOSANTS QUE PAR DES PIÈSES SONY DONT LES NUMÉROS SONT DONNÉS DANS CE MANUEL OU DANS LES SUPPÉMENTS PUBLIÉS PAR SONY.

SECTION 1
SERVICING NOTES

NOTES ON HANDLING THE OPTICAL PICK-UP BLOCK OR BASE UNIT

The laser diode in the optical pick-up block may suffer electrostatic breakdown because of the potential difference generated by the charged electrostatic load, etc. on clothing and the human body. During repair, pay attention to electrostatic breakdown and also use the procedure in the printed matter which is included in the repair parts.
The flexible board is easily damaged and should be handled with care.

NOTES ON LASER DIODE EMISSION CHECK

The laser beam on this model is concentrated so as to be focused on the disc reflective surface by the objective lens in the optical pick-up block. Therefore, when checking the laser diode emission, observe from more than 30cm away from the objective lens.

Before Replacing the Optical pick-up Block

Please be sure to check thoroughly the parameters as per the "Optical pick-up Block Checking Procedure" (Part No. : 9-960-027-11) issued separately before replacing the optical Pick-up block.
Note and specifications required to check are given below.

- FOK output : IC601 ⑥⑤ pin
  When checking FOK, remove the lead wire to disc motor.
- RF signal P-to-P value : 0.4 to 0.8Vp-p

Laser Diode Checking Methods

During normal operation of the equipment, emission of the laser diode is prohibited unless the upper panel is closed while turning ON the S809(push switch type).
The following two checking methods for the laser diode are operable.

Method :
Emission of the laser diode is visually checked.

1. Open the upper lid.
2. Push the S809 as shown in Fig. 1 .
3. Check the object lens for confirming normal emission of the laser diode. If not emitting, there is a trouble in the automatic power control circuit or the optical pick-up. During normal operation, the laser diode is turned ON about 2.5 seconds for focus searching.

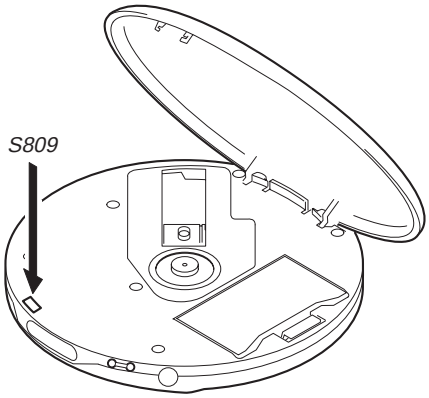

Fig.1 Method to push S809

SECTION 2
GENERAL

This section is extracted from instruction manual.

LOCATING THE CONTROLS

CD player (front)

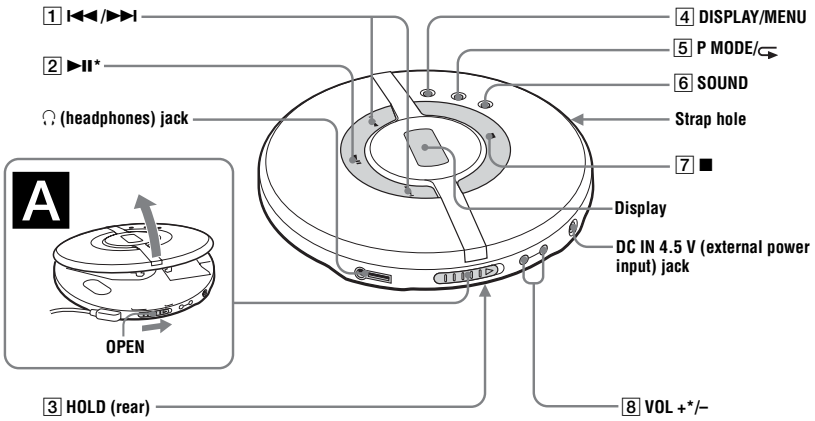

*The button has a tactile dot.

CD player (inside)

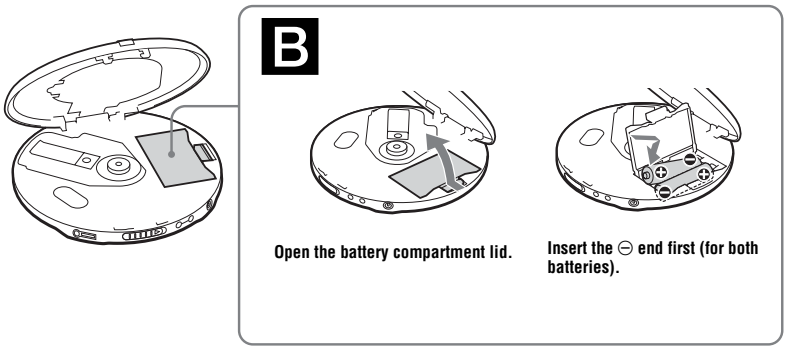

SECTION 3
DISASSEMBLY

● The equipment can be removed using the following procedure.

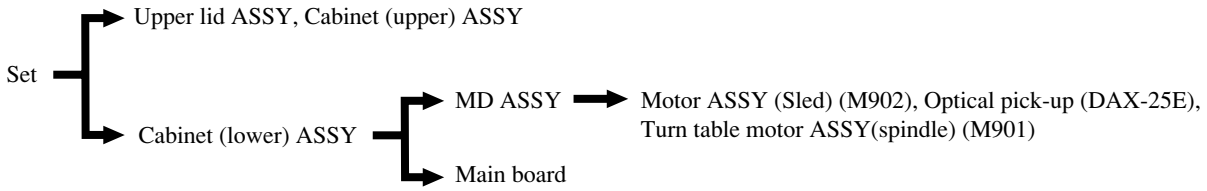

Note : Follow the disassembly procedure in the numerical order given.

3-1. UPPER LID ASSY, CABINET (UPPER) ASSY, CABINET (LOWER) ASSY

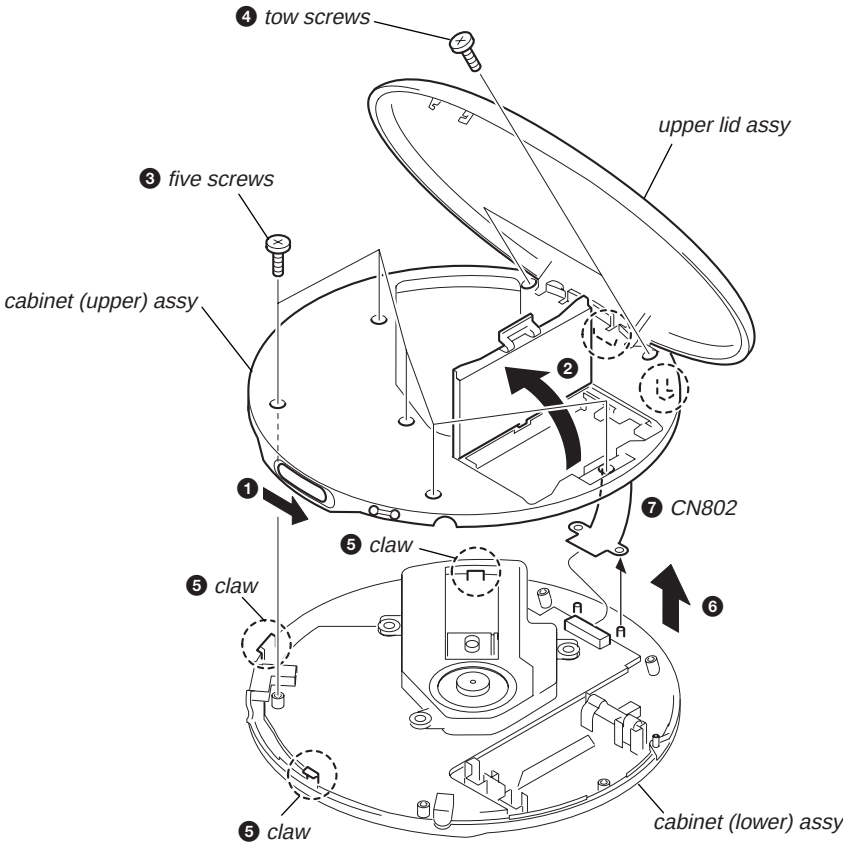

3-2. MD ASSY (CDM-3325ER), MAIN BOARD

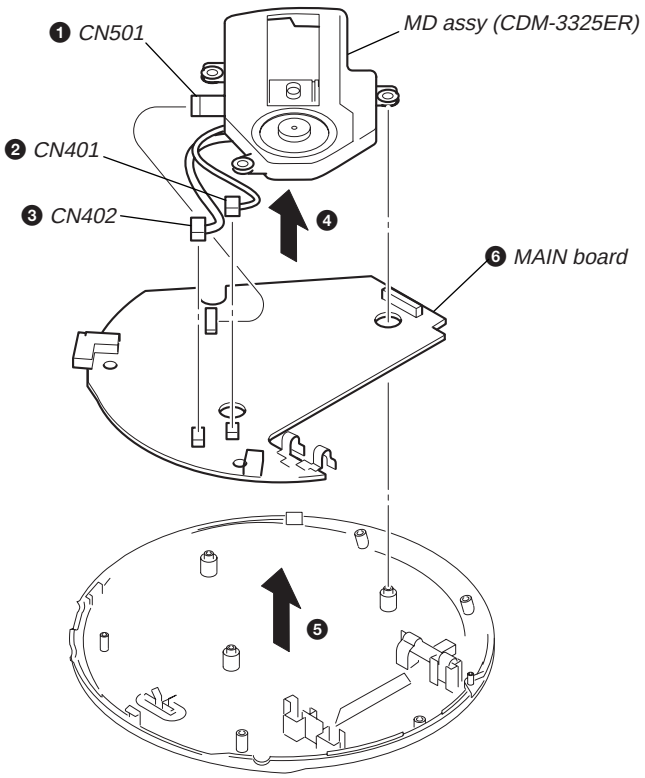

HOW TO SET THE HARNESS IN ASSEMBLING

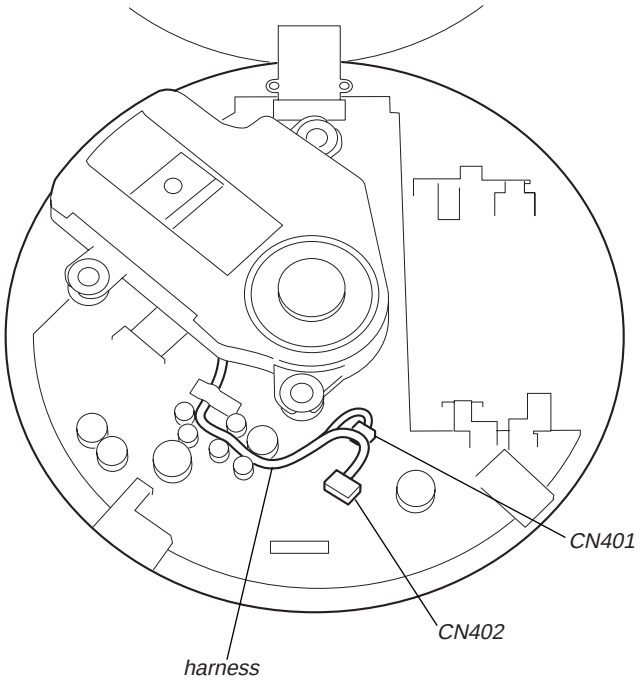

3-3. MOTOR ASSY (SLED) (M902), OPTICAL PICK-UP (DAX-25E), TURN TABLE MOTOR ASSY (SPINDLE) (M901)

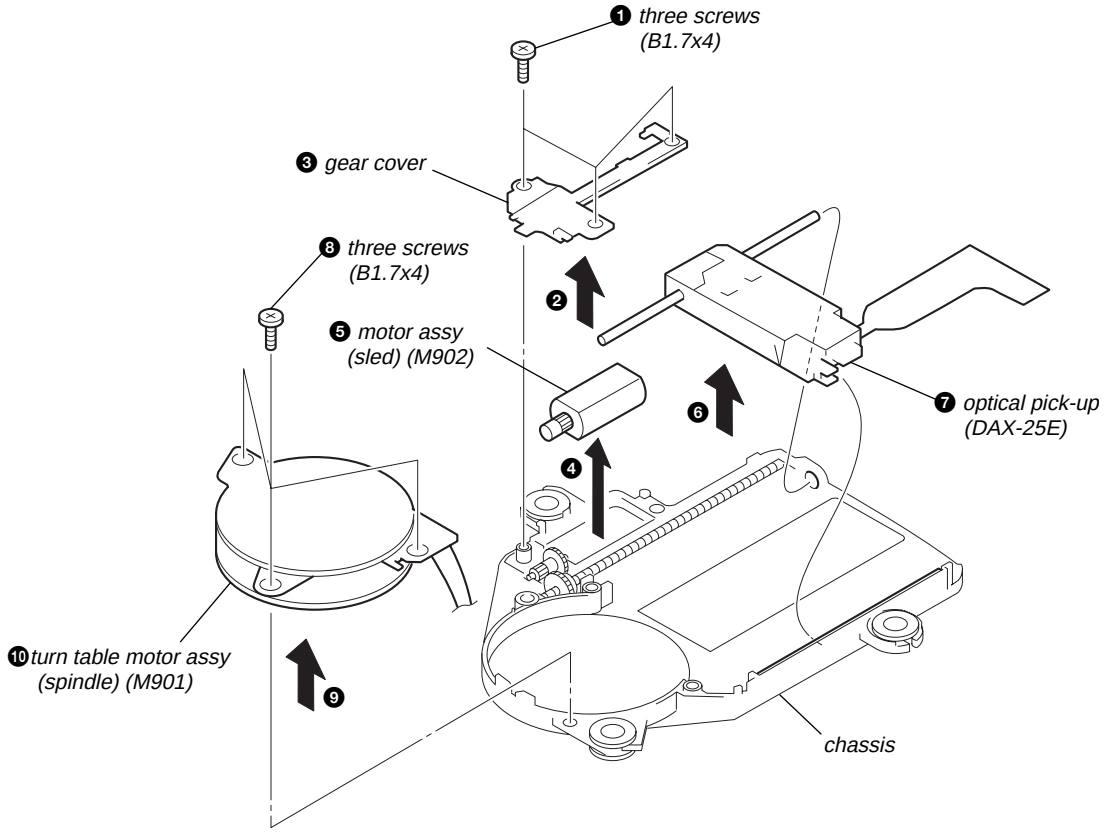

SECTION 4
ELECTRICAL ADJUSTMENTS

The CD section adjustments are done automatically in this set.

Precautions for Check

1. Perform check in the order given.
2. Use YEDS-18 disc (Part No.: 3-702-101-01) unless otherwise indicated.
3. Power supply voltage requirement :DC4.5 V in DC IN jack. (J401)

   VOLUME button : Minimum
   HOLD switch : OFF

Focus bias Check

Condition:

• Hold the set in horizontal state.

Connection:

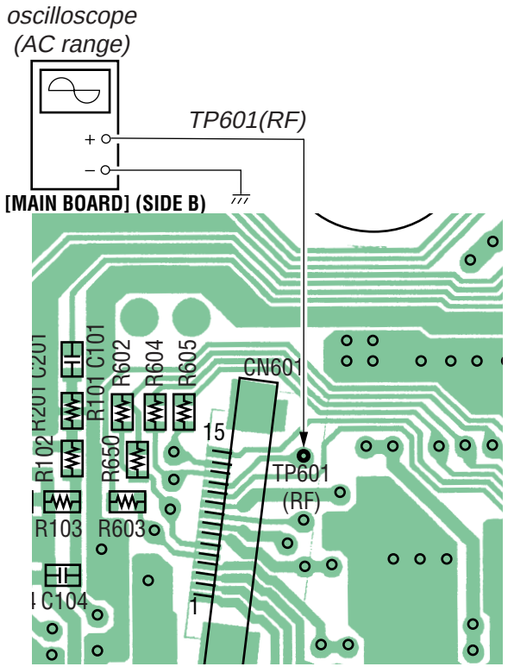

Procedure:

1. Connect the oscilloscope to the test point TP601(RF) on the MAIN board.
2. Set a disc. (YEDS-18)
3. Press the [▶II] button.
4. Check the oscilloscope waveform is as shown below.
   A good eye pattern means that the diamond shape (◇) in the center of the waveform can be clearly distinguished.

RF Signal reference Waveform (Eye Pattern)

VOLT/DIV : 100 mV (With the 10 : 1 probe in use)
TIME/DIV : 500ns

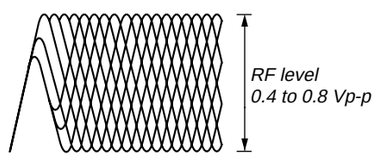

To watch the eye pattern, set the oscilloscope to AC range and increase the vertical sensitivity of the oscilloscope for easy watch-ing.

5. Stop revolving of the disc motor by pressing the [■] button.

7

SECTION 5
DIAGRAMS

5-1. BLOCK DIAGRAM

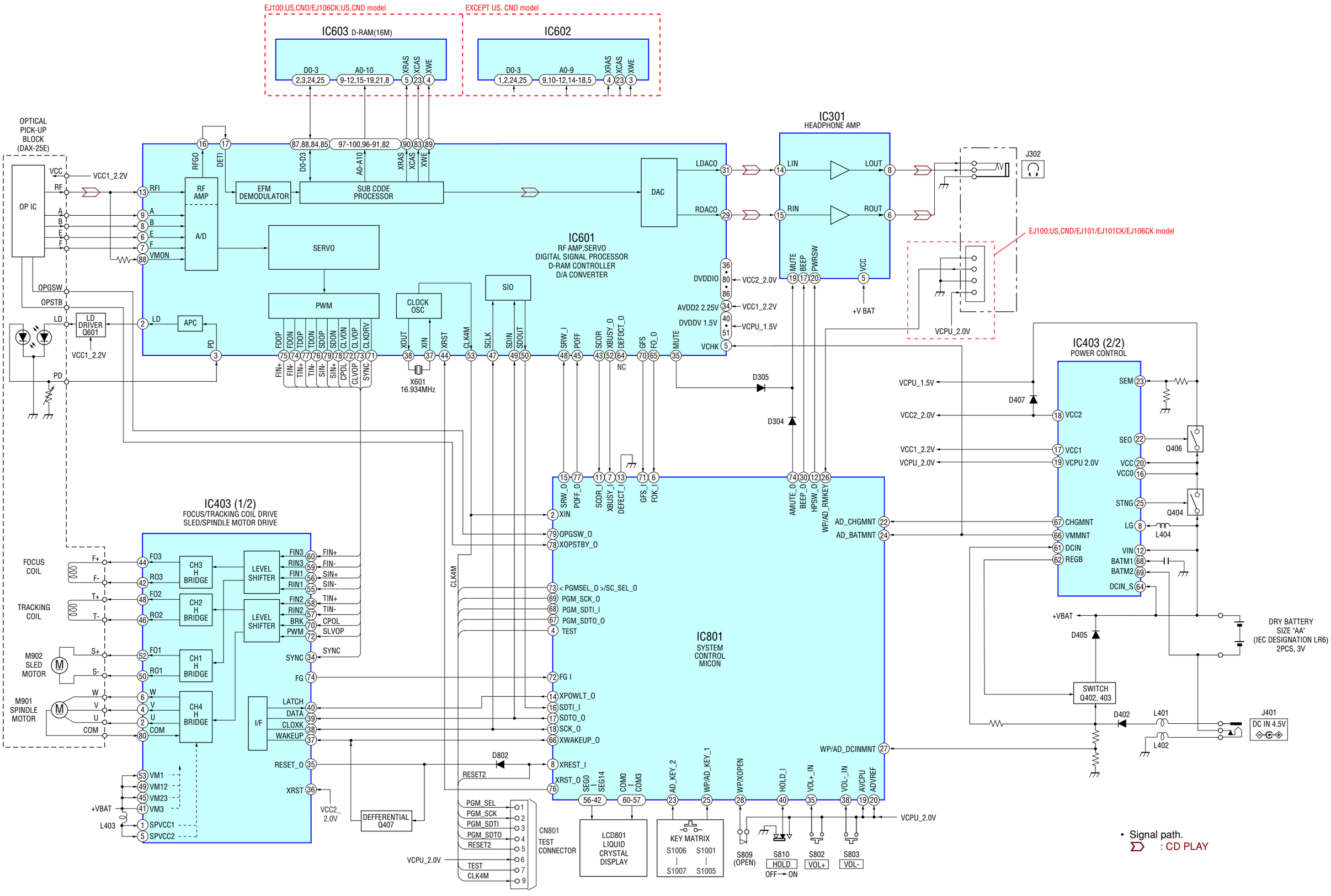

5-2. PRINTED WIRING BOARDS – MAIN SECTION (SIDE A) – : Uses unleaded solder.

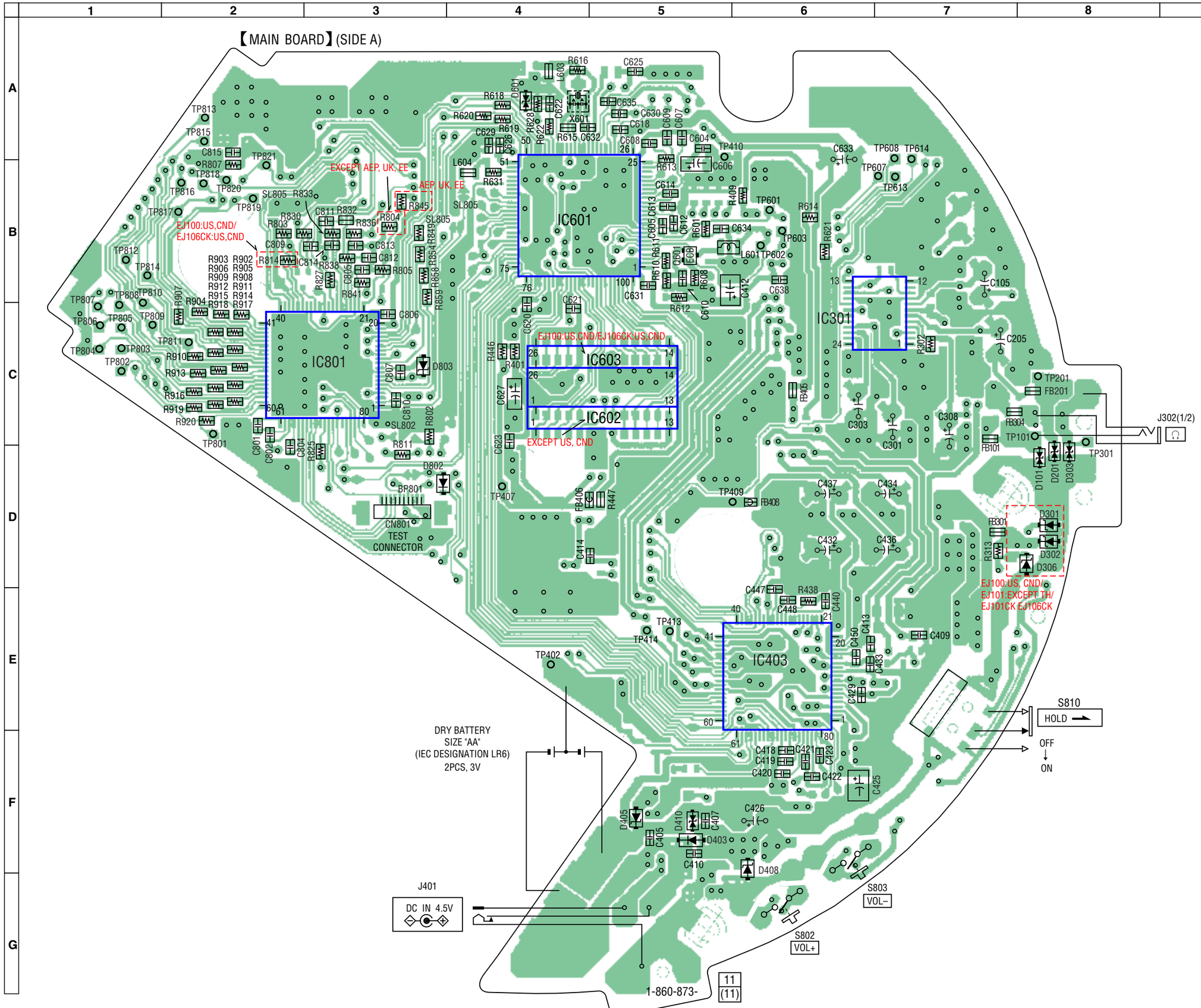

- **Semiconductor Location**

Ref. No.	Location
D101	D-8
D201	D-8
D301	D-8
D302	D-8
D303	D-8
D306	D-8
D403	F-5
D405	F-5
D408	F-6
D410	F-5
D601	A-4
D802	D-3
D803	C-3
IC301	C-6
IC403	E-6
IC602	C-5
IC601	B-4
IC603	C-5
IC801	C-3
Q601	B-5

PRINTED WIRING BOARDS – MAIN SECTION (SIDE B) –

: Uses unleaded solder.

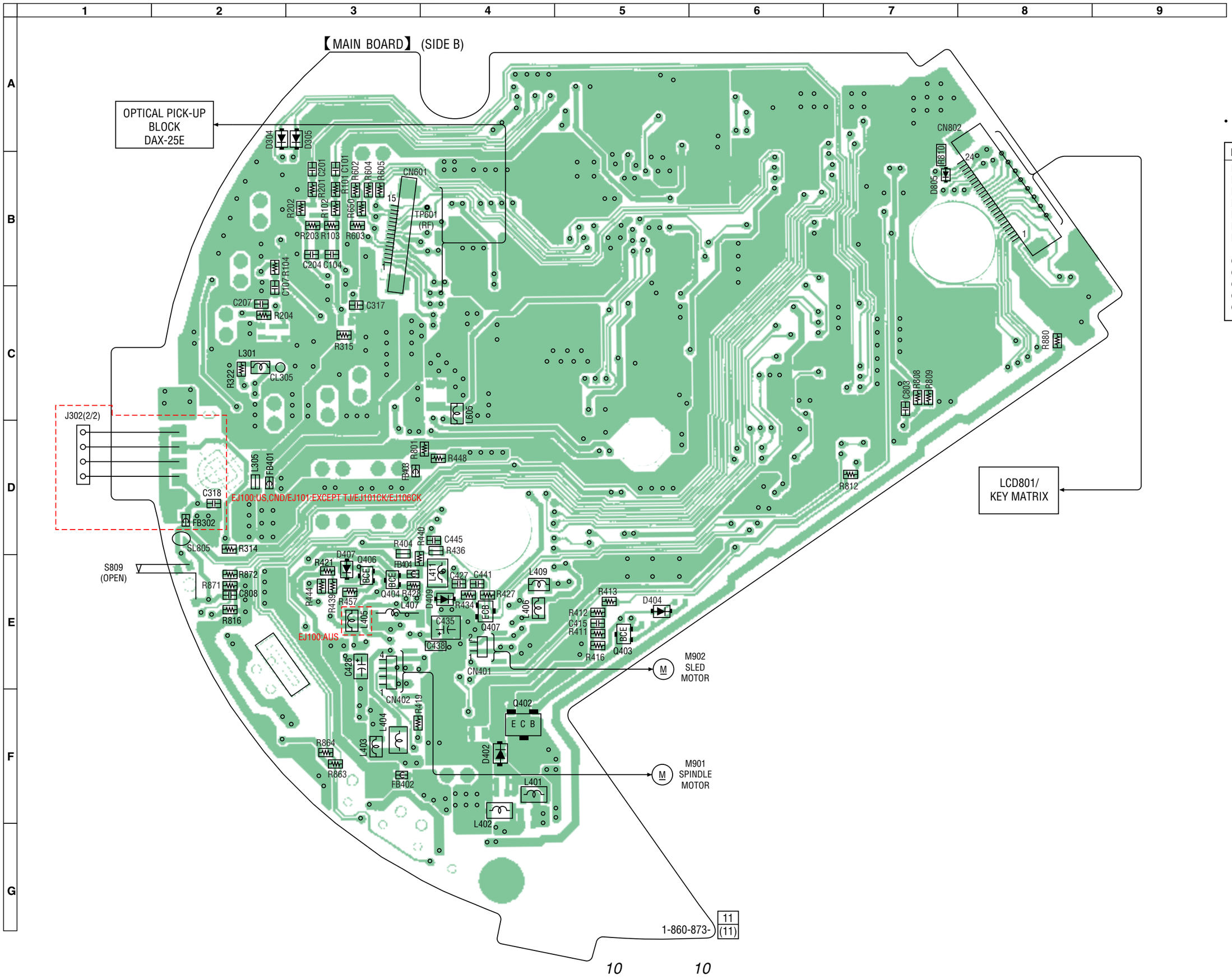

- **Semiconductor Location**

Ref. No.	Location
D304	A-2
D305	A-3
D402	F-4
D404	E-5
D407	E-3
D409	E-4
D805	B-7
Q402	F-4
Q403	E-5
Q404	E-3
Q406	E-3
Q407	E-4

5-3. SCHEMATIC DIAGRAM – MAIN SECTION (1/3) –

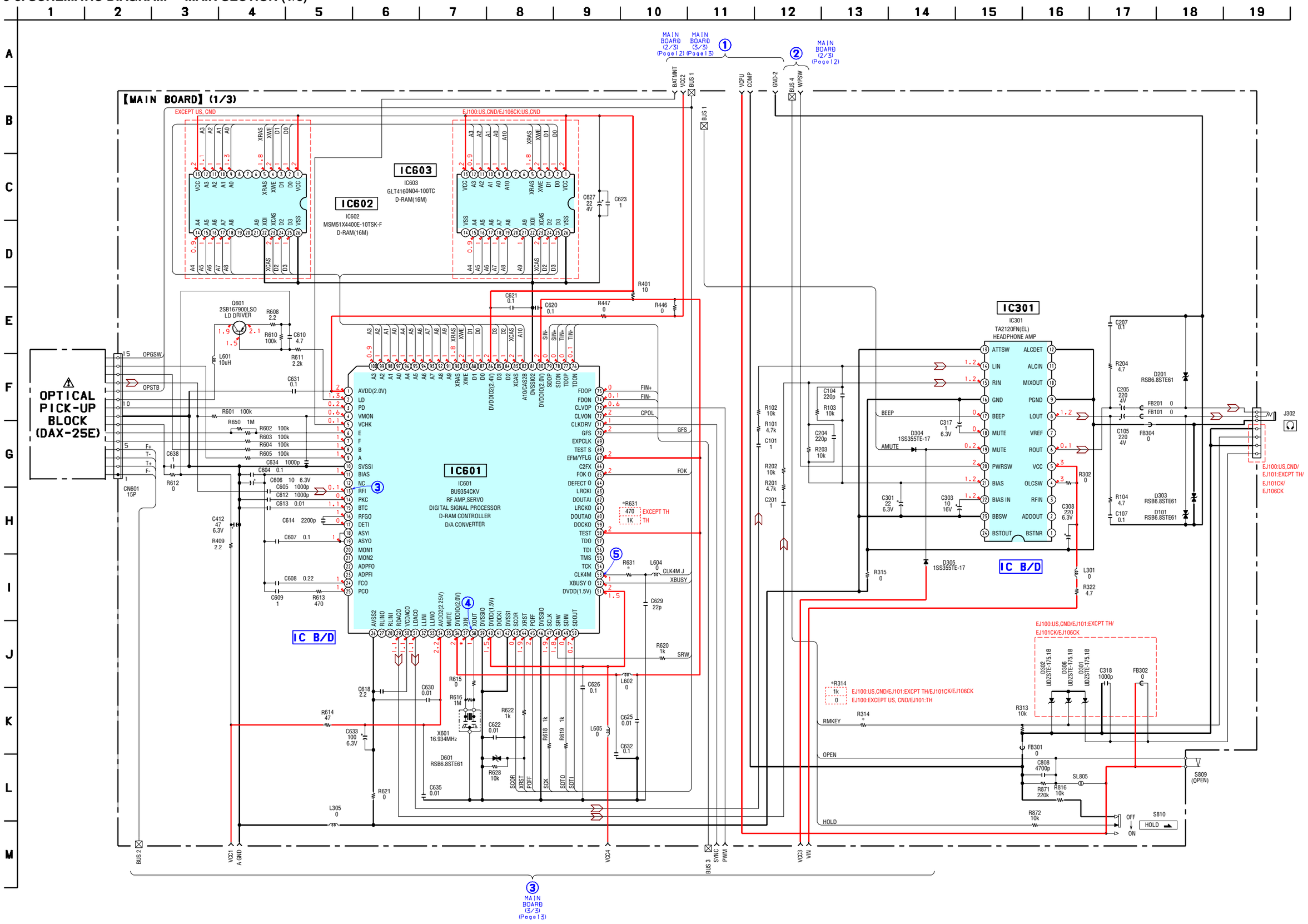

5-4. SCHEMATIC DIAGRAM – MAIN SECTION (2/3) –

• See page 16 for IC Pin Function Description.

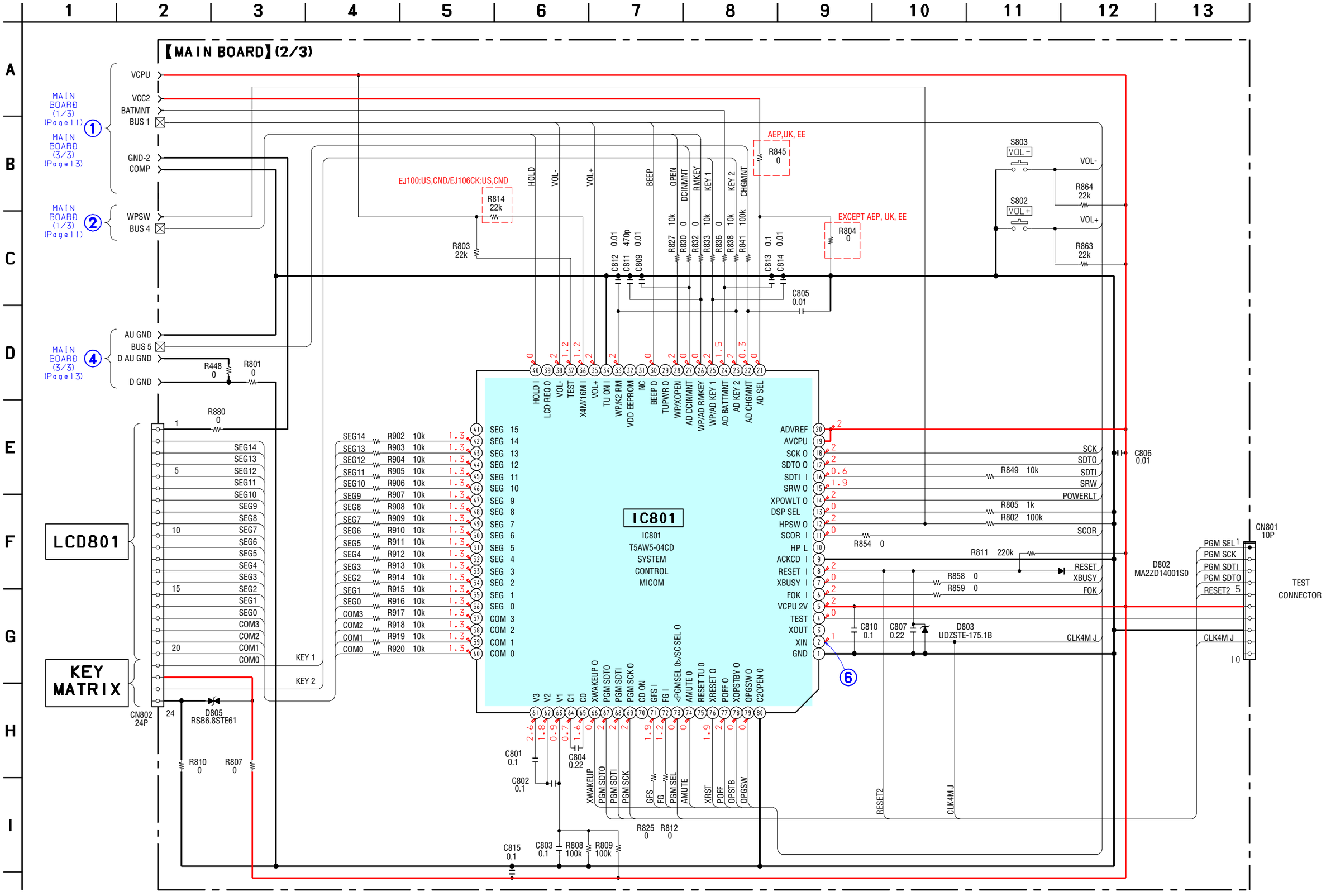

5-5. SCHEMATIC DIAGRAM – MAIN SECTION (3/3) –

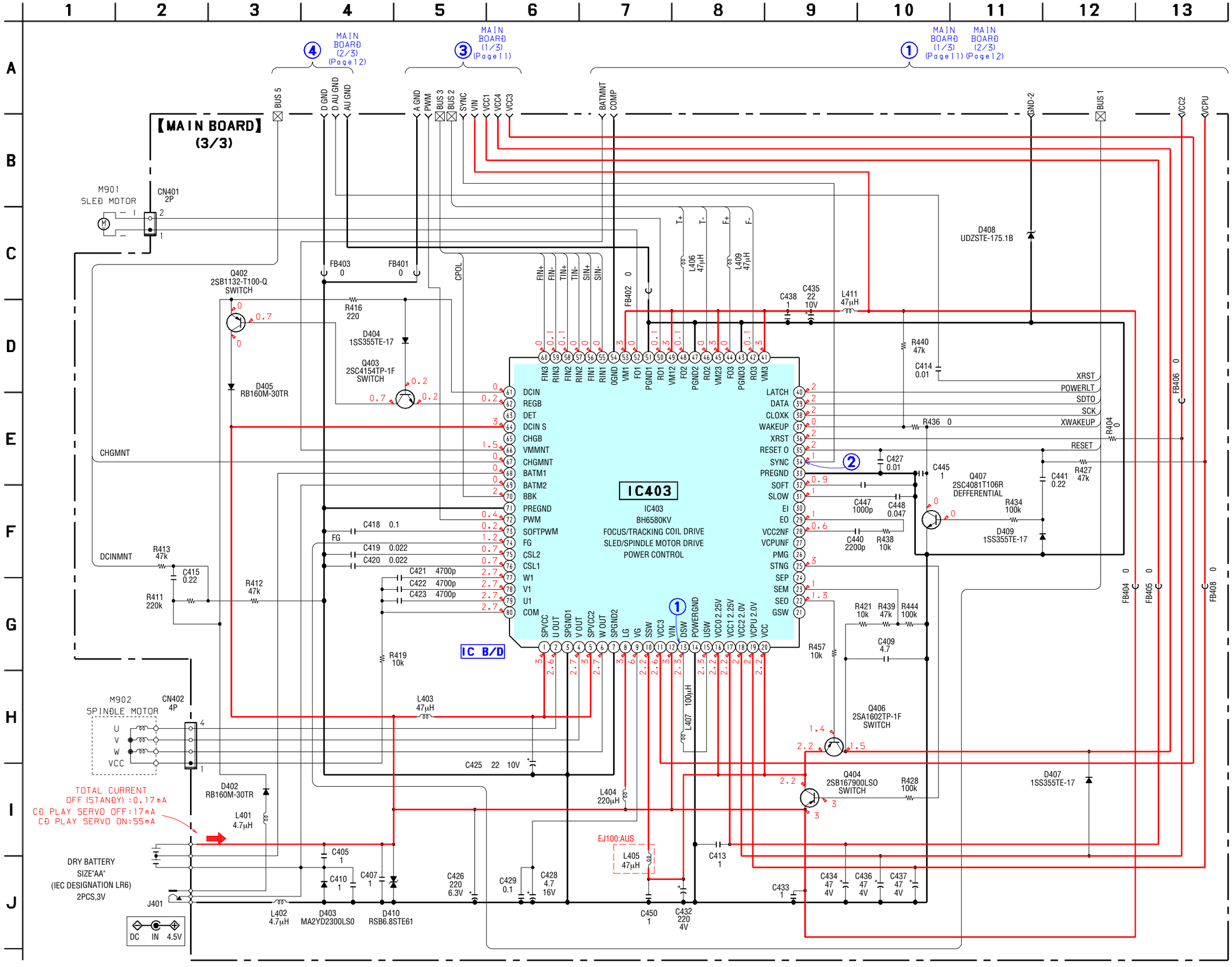

For Schematic Diagrams.

Note:

- All capacitors are in μF unless otherwise noted. pF: μμF 50 WV or less are not indicated except for electrolytics and tantalums.
- All resistors are in Ω and $^1/_4$ W or less unless otherwise specifed.
- △ : internal component.

Note:	Note:
The components identified by mark ⚠ or dotted line with mark ⚠ are critical for safety. Replace only with part number specified.	Les composants identifiés par une marque ⚠ sont critiques pour la sécurité. Ne les remplacer que par une piéce portant le numéro spécifié.

- ▬ : B+ Line.
- Power voltage is dc 4.5 V and fed with regulated dc power supply from battery terminal.
- Voltages are dc with respect to ground under no-signal conditions. no mark : PLAY
- Voltages are taken with a VOM (Input impedance 10 MΩ). Voltage variations may be noted due to normal production tolerances.
- Waveforms are taken with a oscilloscope. Voltage variations may be noted due to normal production toler ances.
- Circled numbers refer to waveforms.
- Signal path.
  Σ : CD PLAY
- Abbreviation
  CND: Canadian model
  EE : East Europian model
  AUS: Australian model
  E18 : AC 100 - 240 V area in E model

For Printed Wiring Boards:

Note:

- ○——— : parts extracted from the component side.
- ○ : Through hole.
- △ : internal component.
- ▬ : Pattern from the side which enables seeing. (The other layers' patterns are not indicated.)

Caution:
Pattern face side (Side B) : Parts on the pattern face side seen from the pattern face are indicated.
Parts face side (Side A) : Parts on the parts face side seen from the parts face are indicated.

- Abbreviation
  CND: Canadian model
  EE : East Europian model
  AUS: Australian model
  E18 : AC 100 - 240 V area in E model

• WAVEFORMS

① IC403 ⑬ DSW

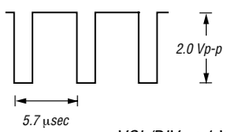

VOL/DIV : 1 V AC
TIME/DIV : 2 μsec

④ IC601 ㊳ XOUT

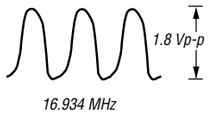

VOL/DIV : 1 V AC
TIME/DIV : 50 nsec

② IC403 ㉞ SYNC

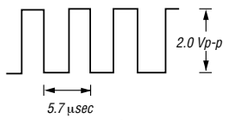

VOL/DIV : 1 V AC
TIME/DIV : 2 μsec

⑤ IC601 ㊸ CLK4M

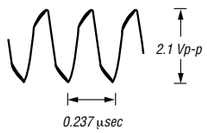

VOL/DIV : 1 V AC
TIME/DIV : 0.2 μsec

③ IC601 ⑬ RFI

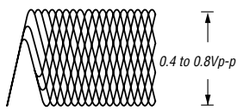

VOL/DIV : 0.5 V AC
TIME/DIV : 0.5 μsec

⑥ IC801 ② XIN

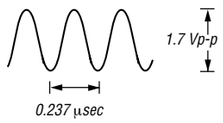

VOL/DIV : 1 V AC
TIME/DIV : 0.2 μsec

• IC BLOCK DIAGRAM

IC301 TA2120FN (EL)

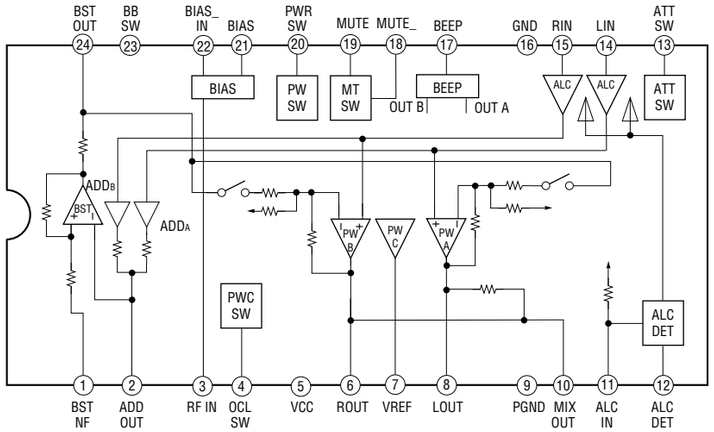

IC601 BU9354CKV

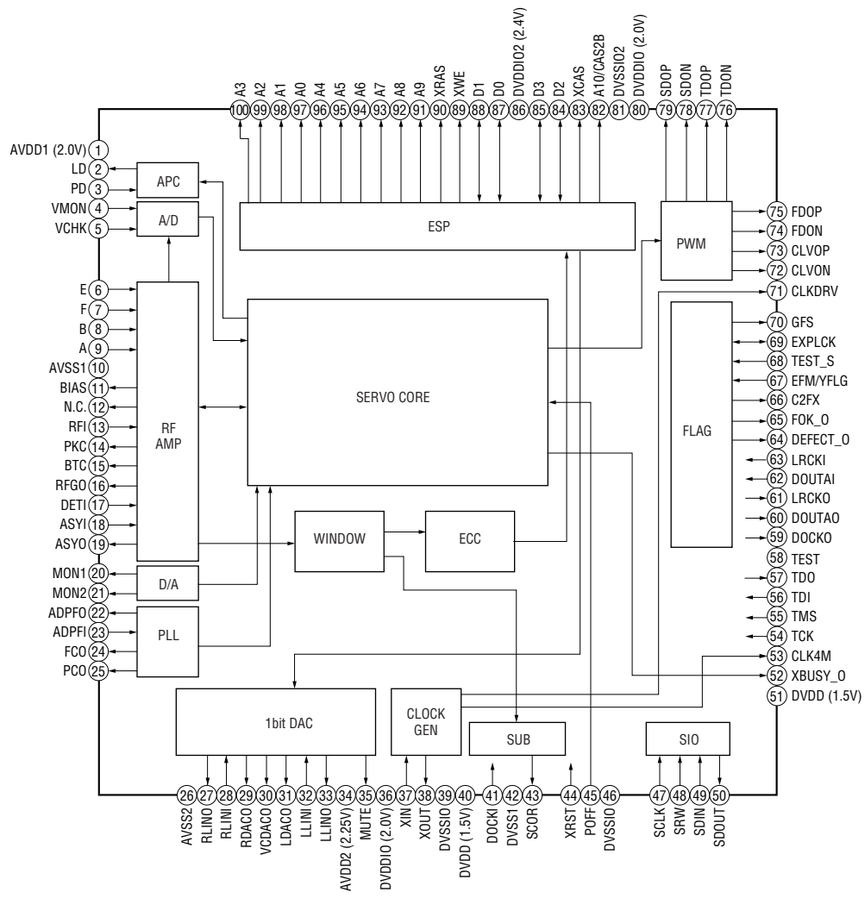

14

IC403 BH6580KV

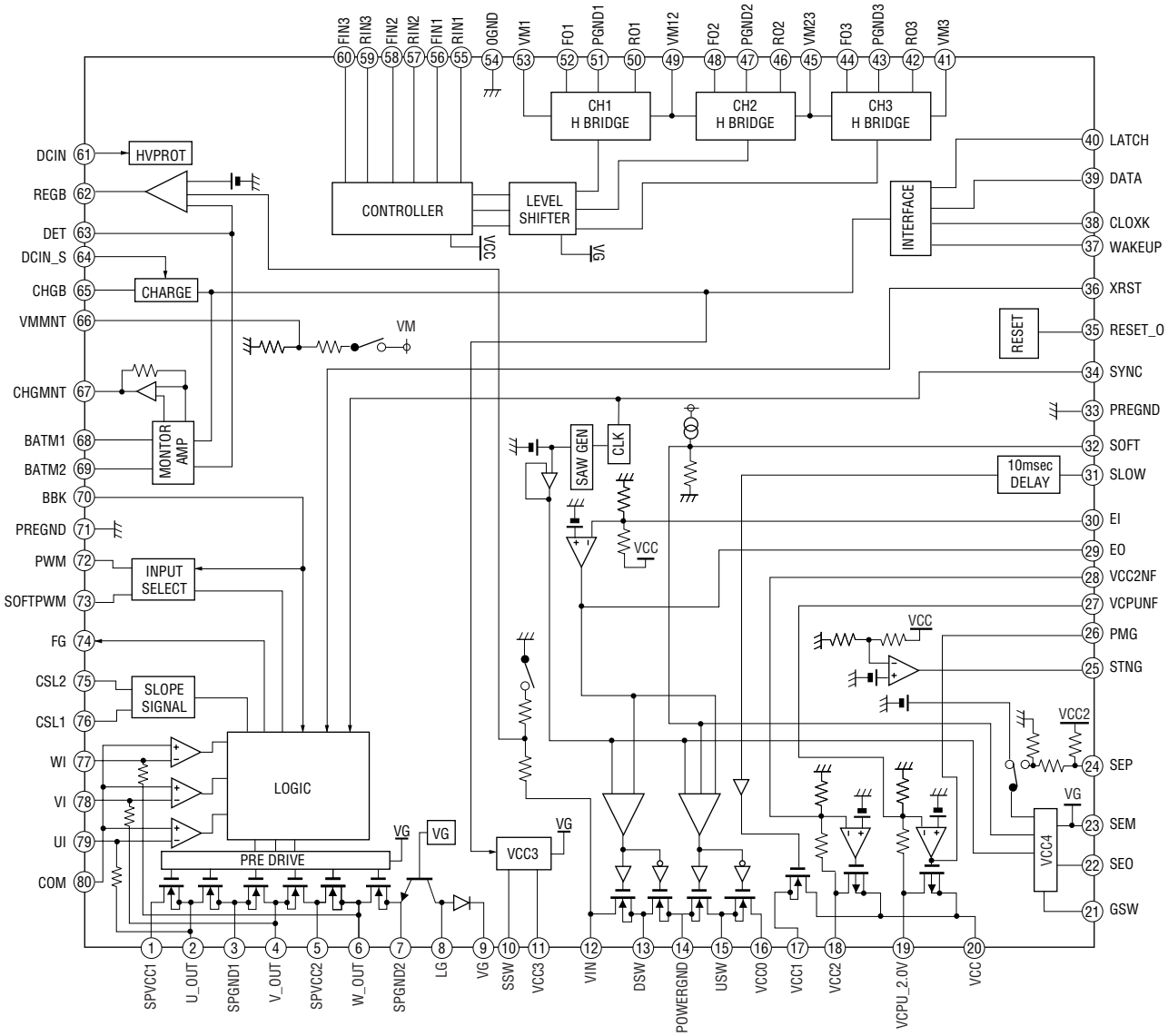

5-6. IC PIN FUNCTION DESCRINTION

IC801 (SYSTEM CONTROL) T5AW5-04CD

Pin No.	Pin name	I/O	Description
1	GND	–	Ground terminal
2	XIN	I	System clock input
3	XOUT	O	Not used (OPEN)
4	TEST	I	Test mode terminal
5	VCPU_2.0V	–	Power supply
6	FOK_I	I	Focus OK signal input
7	XBUSY_I	I	Auto sequencer status signal input from BU9314CKV
8	RESET_I	I	Micon reset input
9	ACKCD_I	I	Not used (Fixed to L)
10	NC	O	Not used (OPEN)
11	SCOR_I	I	SCOR pulse input
12	HPSW_O	O	Power ON signal output to TA2120FN
13	DSP_SEL	I	DSP select signal input (Fixed to L)
14	XPOWLT_O	O	Data latch signal output to BH6580KV
15	SRW_O	O	Serial interface Read/Write signal output to BU9354CKV
16	SDTI_I	I	Serial data input from BU9354CKV
17	SDTO_O	O	Serial data output to BU9354CKV
18	SCK_O	O	Serial clock output to BU9354CKV
19	AVCPU	–	Power supply for CPU and I/O
20	ADVREF	I	Analog reference voltage for A/D converter
21	AD_SEL	I	Destination setting terminal
22	AD_CHGMNT	I	Charging monitor input
23	AD_KEY_2	I	Set’s button detection input
24	AD_BATTMNT	I	Battery voltage monitor input
25	WP/AD_KEY1	I	Set’s button detection input
26	WP/AD_RMKEY	I	Remocon’s button detection input
27	AD_DCINMNT	I	DC-IN voltage monitoring input
28	WP/XOPEN	I	OPEN switch status detection input
29	TUPWR_O	O	Not used (OPEN)
30	BEEP_O	O	BEEP sound output
31	NC	O	Not used (OPEN)
32	<VDD_EEPROM>	–	Power supply for EEPROM (Not used)
33	WP/K2_RM	O	Set’s button/ remocon’s button select output
34	TU_ON_I	I	Not used (fixed at L)
35	VOL+_IN	I	“VOL+” button detection input
36	X4M/16M_I	I	DRAM size selection signal input
37	TEST	I	TEST terminal
38	VOL–_IN	I	“VOL–” button detection input
39	LCD_REQ_O	O	Not used (OPEN)
40	HOLD_I	I	HOLD switch status detection input
41 to 56	SEG0 to 15	O	LCD segment output
57 to 60	COM0 to 3	O	LCD common output
61 to 63	V1 to 3	–	Inner charge pump terminal
64	C1	–	Inner charge pump terminal
65	C0	–	Inner charge pump terminal
66	XWAKEUP_O	O	PGM wake-up signal output
67	PGM_SDTO	O	PGM serial data output

Pin No.	Pin name	I/O	Description
68	PGM_SDTI	I	PGM serial data input
69	PGM_SCK_O	O	PGM clock output
70	CD_ON	O	Not used (OPEN)
71	GFS_I	I	Guard Frame Synchronous signal input
72	FG_I	I	FG signal input
73	<PGMSEL_0/SC_SEL_0>	O	PGM select signal output
74	AMUTE_O	O	Mute ON/OFF signal output
75	RESET_TU_O	O	Not used (OPEN)
76	XREST_O	O	System reset output
77	POFF_O	O	Power off signal output to BU9354CKV
78	XOPSTBY_O	O	Pick-up’s power supply ON/OFF control signal output
79	OPGSW_O	O	RF IC’s gain control signal output
80	C2POEN_O	O	Not used (Fixd to L)

SECTION 6
EXPLODED VIEWS

NOTE :

- -XX, -X mean standardized parts, so they may have some difference from the original one.
- Color indication of Appearance Parts
  Example :
  KNOB, BALANCE (WHITE) ••• (RED)
  ↑ ↑
  Parts color Cabinet's color
- Items marked " * "are not stocked since they are seldom required for routine service. Some delay should be anticipated when ordering these items.
- The mechanical parts with no reference number in the exploded views are not supplied.
- Hardware (# mark) list and accessories and packing materials are given in the last of this parts list.
- Abbreviation
  CND : Canadian model
  EE : East Europian model
  AUS : Australian model
  E18 : AC 100 - 240 V area in E model
  C&SA : Central & South America model
  EA : Saudi Arabia model
  TH : Thai model

The components identified by mark ⚠ or dotted line with mark ⚠ are critical for safety.
Replace only with part number specified.

Les composants identifiés par une marque ⚠ sont critiques pour la sécurité.
Ne les remplacer que par une piéce portant le numéro spécifié.

6-1. UPPER LID SECTION

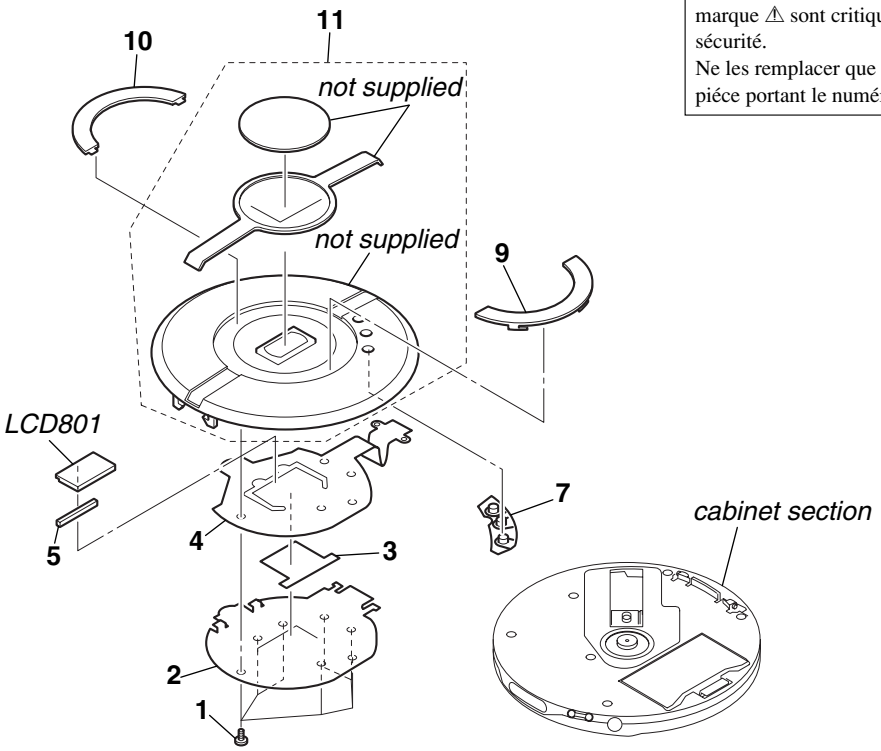

Ref. No.	Part No.	Description	Remark
1	3-254-014-11	SCREW	
* 2	3-261-257-01	COVER (UPPER LID)	
3	3-261-259-01	SHEET (COVER), ADHESIVE	
4	1-478-412-11	SWITCH UNIT	
5	3-261-234-01	CONNECTOR, RUBBER	
7	3-261-231-01	BUTTON (SOUND) (SILVER)	(EJ100, EJ101:TH/EJ101CK/EJ106CK)
7	3-261-231-11	BUTTON (SOUND) (BLUE)	(EJ100:US,TH/EJ101:TH)
7	3-261-284-01	BUTTON (SOUND)(SILVER)(EJ100:CND,	AEP,UK,AUS,EE,E18,EA/EJ101,E18,C&SA)
7	3-261-284-11	BUTTON (SOUND) (BLUE)	(EJ100:CND,AEP,UK,AUS,E18,EE)
7	3-261-284-21	BUTTON (SOUND) (BLACK)(EJ101,E18,C&SA)	
7	3-261-292-01	BUTTON (SOUND) PSYC (WHITE)	(EJ100:CND/EJ101:AEP,UK,EE)
9	3-261-229-01	BUTTON (STOP) (SILVER)	(EJ100, EJ101:TH/EJ101CK/EJ106CK)
9	3-261-229-11	BUTTON (STOP) (BLUE)	(EJ100:US,TH/EJ101:TH)
9	3-261-283-01	BUTTON (STOP) (SILVER)(EJ100:CND,AEP,UK,	AUS,EE,E18,EA/EJ101:E18,C&SA)
9	3-261-283-11	BUTTON (STOP) (BLUE)	(EJ100:CND,AEP,UK,AUS,E18,EE)
9	3-261-283-21	BUTTON (STOP) (BLACK) (EJ101:E18,C&SA)	
9	3-261-283-31	BUTTON (STOP) (WHITE) (EJ100:CND)	
9	3-261-283-41	BUTTON (STOP) (BLACK) (EJ100:CND)	
9	3-261-283-51	BUTTON (STOP) (EJ101:AEP,UK,EE)	
10	3-261-230-01	BUTTON (PLAY) (SILVER)	(EJ100,EJ101:TH/EJ101CK/EJ106CK)
10	3-261-230-11	BUTTON (PLAY) (BLUE) (EJ100:US,TH/EJ101:TH)	
10	3-261-282-01	BUTTON (PLAY)(SILVER)	(EJ100:CND,AEP,UK,AUS,EE,E18,EA/ EJ101:E18,C&SA)
10	3-261-282-11	BUTTON (PLAY) (BLUE)	(EJ100:CND,AEP,UK,AUS,E18,EE)
10	3-261-282-21	BUTTON (PLAY) (BLACK) (EJ101:E18,C&SA)	
10	3-261-282-31	BUTTON (PLAY) (WHITE) (EJ100:CND)	
10	3-261-282-41	BUTTON (PLAY) (BLACK) (EJ100:CND)	
10	3-261-282-51	BUTTON (PLAY) (EJ101:AEP,UK,EE)	
11	X-2021-367-1	WINDOW (G) SUB ASSY, LCD(EJ101:AEP,UK,EE)	
11	X-2022-582-1	WINDOW (S) SUB ASSY, LCD (SILVER)	(EJ100:TH)
11	X-2022-586-1	WINDOW (S) SUB ASSY, LCD (SILVER)(EJ101:TH)	
11	X-2022-587-1	WINDOW (L) SUB ASSY, LCD (BLUE) (EJ101:TH)	
11	X-3384-513-2	LID SUB ASSY (W), UPPER (WHITE) (EJ100:CND)	
11	X-3384-514-2	LID SUB ASSY (B), UPPER (BLACK) (EJ100:CND)	
11	X-3384-762-2	WINDOW (S) SUB ASSY, LCD (SILVER)	(EJ100:CND,AEP,UK,AUS,EE,E18,EA)
11	X-3384-763-2	WINDOW (L) SUB ASSY, LCD (BLUE)	(EJ100:CND,AEP,UK,AUS,E18,EE)
11	X-3384-766-2	WINDOW (S) SUB ASSY, LCD (SILVER)	(EJ101:E18,C&SA)
11	X-3384-767-2	WINDOW (B) SUB ASSY, LCD (BLACK)	(EJ101:E18,C&SA)
11	X-3384-768-2	WINDOW (L) SUB ASSY, LCD (BLUE)	(EJ100:US, TH)
11	X-3384-769-1	WINDOW (S) SUB ASSY, LCD (SILVER)	(EJ106CK)
11	X-3384-770-1	WINDOW (S) SUB ASSY, LCD (SILVER)(EJ101CK)	
LCD801	1-805-461-11	DISPLAY PANEL, LIQUID CRYSTAL	

6-2. CABINET SECTION

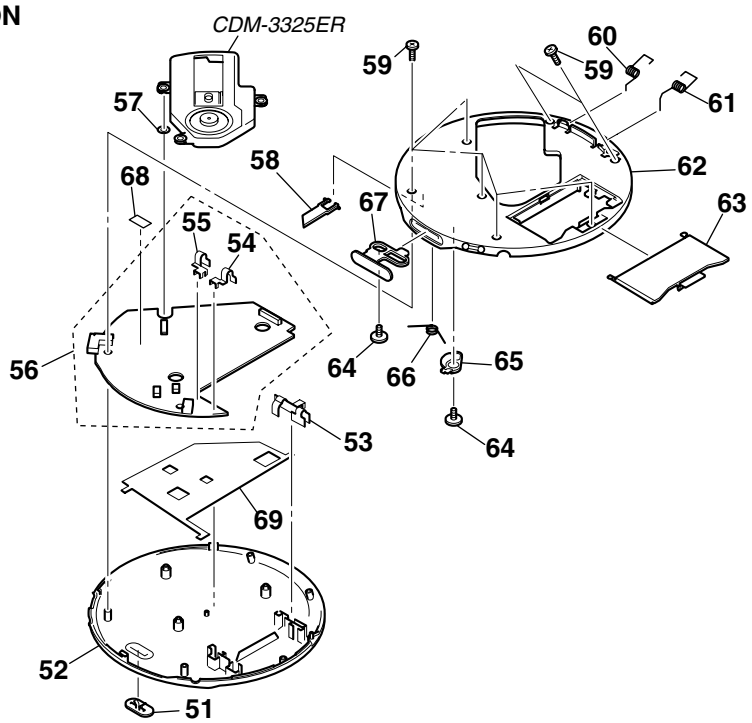

Ref. No.	Part No.	Description	Remark
51	3-261-238-01	KNOB (HOLD)(SILVER) (EJ101CK/EJ106CK)	
51	3-261-238-11	KNOB (HOLD) (BLUE) (EJ100:US)	
51	3-261-272-01	KNOB (HOLD)(SILVER)(EJ100:CND,AEP,UK, AUS,EE,E18,EA,TH/EJ101:E18,C&SA,TH)	
51	3-261-272-11	KNOB (HOLD)(BLUE) (EJ100:CND,AEP,UK, AUS,E18,EE,TH/EJ101:TH)	
51	3-261-272-21	KNOB (HOLD) (BLACK) (EJ101:E18,C&SA)	
51	3-261-272-31	KNOB (HOLD) (WHITE) (EJ100:CND)	
51	3-261-272-41	KNOB (HOLD) (BLACK) (EJ100:CND)	
51	3-261-272-51	KNOB (HOLD) (EJ101:AEP,UK,EE)	
52	3-261-236-01	CABINET (LOWER) (SILVER) (EJ101CK/EJ106CK)	
52	3-261-236-11	CABINET (LOWER) (BLUE) (EJ100:US)	
52	3-261-273-01	CABINET (LOWER) (SILVER)(EJ100:CND,AEP,UK, AUS,EE,E18,EA,TH/EJ101:E18,C&SA,TH)	
52	3-261-273-11	CABINET(LOWER)(BLUE) (EJ100:CND,AEP,UK,AUS,E18,EE,TH/EJ101:TH)	
52	3-261-273-21	CABINET (LOWER) (BLACK) (EJ101:E18,C&SA)	
52	3-261-294-01	CABINET (LOWER) (WHITE) (EJ100:CND)	
52	3-261-294-11	CABINET (LOWER) (BLACK) (EJ100:CND)	
52	3-261-294-21	CABINET (LOWER) (EJ101:AEP,UK,EE)	
53	3-261-254-01	TERMINAL,BATTERY LINK	
54	3-261-253-01	TERMINAL,BATTERY(-)	
55	3-261-252-01	TERMINAL,BATTERY(+)	
56	A-1056-219-A	MAIN PC BOARD ASSY (EJ101:AEP,UK,EE)	
56	A-1058-232-A	MAIN PC BOARD ASSY (EJ100,EJ101:TH)	
* 56	A-4541-833-A	MAIN PC BOARD ASSY (EJ101:E18,C&SA)	
* 56	A-4542-786-A	MAIN PC BOARD ASSY (EJ100:AEP,UK,EE)	
* 56	A-4542-790-A	MAIN PC BOARD ASSY (EJ100:AUS,E18,EA)	
* 56	A-4542-794-A	MAIN PC BOARD ASSY (EJ100:CND)	
* 56	A-4542-812-A	MAIN PC BOARD ASSY (EJ100:US/EJ106CK:US,CND)	
* 56	A-4542-823-A	MAIN PC BOARD ASSY (EJ101CK/EJ106CK:AUS)	
57	3-245-331-02	INSULATOR	
58	3-261-240-01	LEVER (DETECTION) (EJ100:US,TH/EJ101CK/EJ106CK)	
58	3-261-277-01	LEVER (DETECTION) (EJ100:CND,AEP,UK,AUS,EE,E18,EA/EJ101)	
59	3-254-070-01	SCREW...(BLUE,WHITE)	
59	3-254-070-11	SCREW...(SILVER,BLACK)	
60	3-261-255-01	SPRING (L)	
61	3-261-256-01	SPRING (R)	
62	X-2021-366-1	CABINET (UPPER) SUB ASSY (G) (EJ101:AEP,UK,EE)	
62	X-3384-381-1	CABINET (UPPER) SUB ASSY (S) (SILVER) (EJ100:CND,AEP,UK,AUS,EE,E18,EA/EJ101:E18,C&SA)	
62	X-3384-385-1	CABINET (UPPER) SUB ASSY (L) (BLUE) (EJ100:CND,AEP,UK,AUS,E18,EE)	
62	X-3384-434-1	CABINET(UPPER) SUB ASSY(B) (BLACK) (EJ101:E18,C&SA)	
62	X-3384-435-1	CABINET (UPPER) SUB ASSY(L) (BLUE) (EJ100:US,TH/EJ101:TH)	
62	X-3384-437-1	CABINET (UPPER) SUB ASSY (S) (SILVER) (EJ100,EJ101:TH/EJ101CK/EJ106CK)	
62	X-3384-511-1	CABINET (UPPER) SUB ASSY (W) (WHITE) (EJ100:CND)	
62	X-3384-512-1	CABINET (UPPER) SUB ASSY (B) (BLACK) (EJ100:CND)	
63	3-261-258-01	LID, BATTERY CASE (SILVER) (EJ101CK/EJ106CK)	
63	3-261-258-11	LID, BATTERY CASE (BLUE) (EJ100:US)	
63	3-261-271-01	LID, BATTERY CASE (SILVER)(EJ100:CND,AEP, UK,AUS,EE,E18,EA,TH/EJ101:E18,C&SA,TH)	
63	3-261-271-11	LID, BATTERY CASE (BLUE) (EJ100:CND,AEP,UK,AUS,E18,EE,TH/EJ101:TH)	
63	3-261-271-21	LID, BATTERY CASE (BLACK)(EJ101:E18,C&SA)	
63	3-261-271-31	LID, BATTERY CASE (WHITE) (EJ100:CND)	
63	3-261-271-41	LID, BATTERY CASE (BLACK) (EJ100:CND)	
63	3-261-271-51	LID, BATTERY CASE (EJ101:AEP,UK,EE)	
64	3-034-792-11	SCREW, TAPPING (B2.0)	
65	3-261-250-01	LOCK, OPEN (SILVER)	
65	3-261-276-01	LOCK, OPEN (BLUE)	
66	3-261-251-01	SPRING (OPEN)	
67	3-261-239-01	KNOB (OPEN)(SILVER) (EJ100,EJ101:TH/EJ101CK/EJ106CK)	
67	3-261-239-11	KNOB (OPEN) (BLUE) (EJ100:US,TH/EJ101:TH)	
67	3-261-275-01	KNOB (OPEN) (SILVER)(EJ100:CND,AEP,UK,AUS, EE,E18,EA/EJ101:E18,C&SA)	
67	3-261-275-11	KNOB (OPEN) (BLUE) (EJ100:CND,AEP,UK,AUS,E18,EE)	
67	3-261-275-21	KNOB (OPEN) (BLACK) (EJ101:E18,C&SA)	
67	3-261-275-31	KNOB (OPEN) (WHITE) (EJ100:CND)	
67	3-261-275-41	KNOB (OPEN) (BLACK) (EJ100:CND)	
67	3-261-275-51	KNOB (OPEN) (EJ101:AEP,UK,EE)	
68	3-831-441-99	SPACER, KNOB	
69	3-261-260-01	SHEET, SHIELD	

6-3. OPTICAL PICK-UP SECTION (CDM-3325ER)

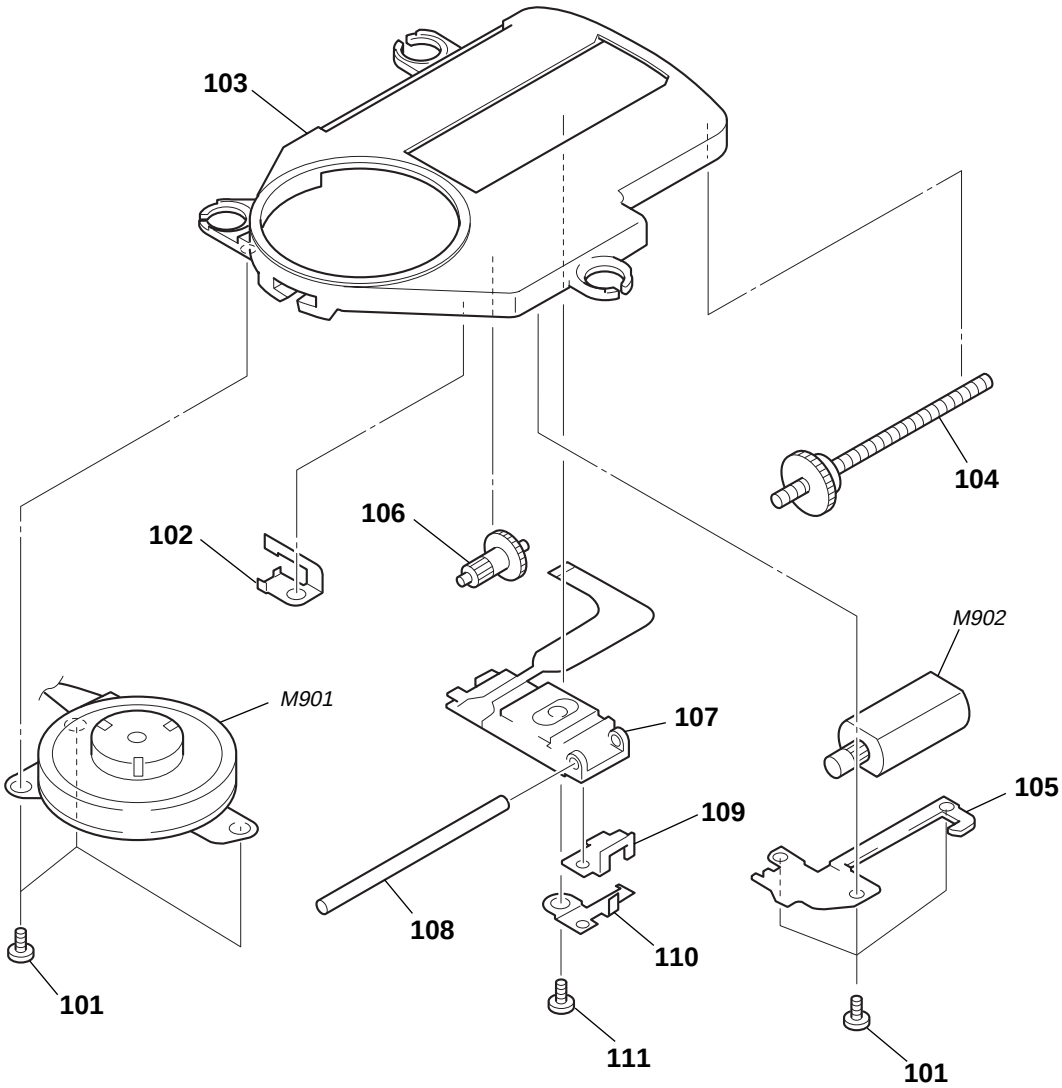

The components identified by mark ⚠ or dotted line with mark ⚠ are critical for safety. Replace only with part number specified.	Les composants identifiés par une marque ⚠ sont critiques pour la sécurité. Ne les remplacer que par une piéce portant le numéro spécifié.

Ref. No.	Part No.	Description	Remark
101	3-318-203-61	SCREW (B1.7X4), TAPPING	
102	3-221-474-01	SPRING, SLED	
103	3-221-472-02	CHASSIS	
104	A-3180-967-A	FEED ASSY, SCREW	
105	3-221-473-01	COVER, GEAR	
106	3-221-268-01	GEAR (B)	
⚠107	X-3380-950-1	OPTICAL PICK-UP (DAX-25E RP ASSY)	
108	3-221-475-01	SHAFT, STANDARD	
109	3-222-298-01	RACK	
110	3-222-299-01	SPRING, RACK RETAINER	
111	3-348-998-31	SCREW (M1.4X2.5), TAPPING, PAN	
M901	A-3180-965-A	MOTOR ASSY, TURN TABLE (SPINDLE)	
M902	A-3180-966-A	MOTOR ASSY, SLED (including GEAR)	

SECTION 7
ELECTRICAL PARTS LIST

MAIN

NOTE:

- Due to standardization, replacements in the parts list may be different from the parts specified in the diagrams or the components used on the set.
- -XX, -X mean standardized parts, so they may have some difference from the original one.
- Items marked "*" are not stocked since they are seldom required for routine service. Some delay should be anticipated when ordering these items.
- CAPACITORS:
  uF: µF
- RESISTORS
  All resistors are in ohms.
  METAL: metal-film resistor
  METAL OXIDE: Metal Oxide-film resistor
  F: nonflammable
- COILS
  uH: µH
- SEMICONDUCTORS
  In each case, u: µ, for example:
  uA...: µA... , uPA... , µPA... , uPB... , µPB... , uPC... , µPC... , uPD..., µPD...
- Abbreviation
  CND : Canadian model
  EE : East Europian model
  AUS : Australian model
  E18 : AC 100-240V area in E model
  C&SA : Central & South America model
  EA : Saudi Arabia model
  TH : Thai model

The components identified by mark ⚠ or dotted line with mark ⚠ are critical for safety.
Replace only with part number specified.

Les composants identifiés par une marque ⚠ sont critiques pour la sécurité.
Ne les remplacer que par une piéce portant le numéro spécifié.

When indicating parts by reference number, please include the board.

Ref. No.	Part No.	Description			Remarks
	A-1056-219-A	MAIN BOARD, COMPLETE (EJ101:AEP,UK,EE)			
	A-1058-232-A	MAIN BOARD, COMPLETE (EJ100,EJ101:TH)			
*	A-4541-833-A	MAIN BOARD, COMPLETE (EJ101:E18,C&SA)			
*	A-4542-786-A	MAIN BOARD, COMPLETE (EJ100:AEP,UK,EE)			
*	A-4542-790-A	MAIN BOARD, COMPLETE (EJ100:AUS,E18,EA)			
*	A-4542-794-A	MAIN BOARD, COMPLETE (EJ100:CND)			
*	A-4542-812-A	MAIN BOARD, COMPLETE (EJ100:US/EJ106CK:US,CND)			
*	A-4542-823-A	MAIN BOARD, COMPLETE (EJ101CK/EJ106CK:AUS)			
		**********			
	3-261-252-01	TERMINAL,BATTERY(+)			
	3-261-253-01	TERMINAL,BATTERY(-)			
		< CAPACITOR >			
C101	1-125-837-91	CERAMIC CHIP	1uF	10%	6.3V
C104	1-162-960-11	CERAMIC CHIP	220PF	10%	50V
C105	1-124-434-00	ELECT	220uF	20%	4V
C107	1-164-156-11	CERAMIC CHIP	0.1uF		25V
C201	1-125-837-91	CERAMIC CHIP	1uF	10%	6.3V
C204	1-162-960-11	CERAMIC CHIP	220PF	10%	50V
C205	1-124-434-00	ELECT	220uF	20%	4V
C207	1-164-156-11	CERAMIC CHIP	0.1uF		25V
C301	1-119-750-11	TANTAL.CHIP	22uF	20%	6.3V
C303	1-124-233-11	ELECT	10uF	20%	16V
C308	1-126-369-11	ELECT	220uF	20%	6.3V
C317	1-125-838-91	CERAMIC CHIP	2.2uF	10%	6.3V
C318	1-162-964-11	CERAMIC CHIP	0.001uF	10%	50V (EJ100:US,CND/EJ101:EXCEPT TH/ EJ101CK/EJ106CK)
C405	1-115-156-11	CERAMIC CHIP	1uF		10V
C407	1-115-156-11	CERAMIC CHIP	1uF		10V
C409	1-117-720-11	CERAMIC CHIP	4.7uF		10V
C410	1-115-156-11	CERAMIC CHIP	1uF		10V
C412	1-110-569-11	TANTAL. CHIP	47uF	20%	6.3V
C413	1-115-156-11	CERAMIC CHIP	1uF		10V
C414	1-162-970-11	CERAMIC CHIP	0.01uF	10%	25V
C415	1-115-467-11	CERAMIC CHIP	0.22uF	10%	10V
C418	1-107-826-11	CERAMIC CHIP	0.1uF	10%	16V
C419	1-164-227-11	CERAMIC CHIP	0.022uF	10%	25V
C420	1-164-227-11	CERAMIC CHIP	0.022uF	10%	25V
C421	1-162-968-11	CERAMIC CHIP	0.0047uF	10%	50V
C422	1-162-968-11	CERAMIC CHIP	0.0047uF	10%	50V
C423	1-162-968-11	CERAMIC CHIP	0.0047uF	10%	50V
C425	1-104-852-11	TANTAL. CHIP	22uF	20%	10V
C426	1-126-369-11	ELECT	220uF	20%	6.3V
C427	1-162-970-11	CERAMIC CHIP	0.01uF	10%	25V
C428	1-107-686-11	TANTAL. CHIP	4.7uF	20%	16V
C429	1-164-156-11	CERAMIC CHIP	0.1uF		25V
C432	1-124-434-00	ELECT	220uF	20%	4V
C433	1-115-156-11	CERAMIC CHIP	1uF		10V
C434	1-124-589-11	ELECT	47uF	20%	16V
C435	1-104-852-11	TANTAL. CHIP	22uF	20%	10V
C436	1-124-589-11	ELECT	47uF	20%	16V
C437	1-124-589-11	ELECT	47uF	20%	16V
C438	1-125-837-91	CERAMIC CHIP	1uF	10%	6.3V
C440	1-162-966-11	CERAMIC CHIP	0.0022uF	10%	50V
C441	1-115-467-11	CERAMIC CHIP	0.22uF	10%	10V
C445	1-125-837-91	CERAMIC CHIP	1uF	10%	6.3V
C447	1-162-964-11	CERAMIC CHIP	0.001uF	10%	50V
C448	1-165-176-11	CERAMIC CHIP	0.047uF	10%	16V
C450	1-115-156-11	CERAMIC CHIP	1uF		10V
C604	1-164-156-11	CERAMIC CHIP	0.1uF		25V
C605	1-162-964-11	CERAMIC CHIP	0.001uF	10%	50V
C606	1-135-259-11	TANTAL. CHIP	10uF	20%	6.3V
C607	1-107-826-11	CERAMIC CHIP	0.1uF	10%	16V
C608	1-115-467-11	CERAMIC CHIP	0.22uF	10%	10V
C609	1-125-837-91	CERAMIC CHIP	1uF	10%	6.3V
C610	1-117-720-11	CERAMIC CHIP	4.7uF		10V
C612	1-162-964-11	CERAMIC CHIP	0.001uF	10%	50V
C613	1-162-970-11	CERAMIC CHIP	0.01uF	10%	25V
C614	1-162-966-11	CERAMIC CHIP	0.0022uF	10%	50V
C618	1-164-505-11	CERAMIC CHIP	2.2uF		16V
C620	1-164-156-11	CERAMIC CHIP	0.1uF		25V
C621	1-164-156-11	CERAMIC CHIP	0.1uF		25V
C622	1-162-970-11	CERAMIC CHIP	0.01uF	10%	25V
C623	1-125-837-91	CERAMIC CHIP	1uF	10%	6.3V
C625	1-162-970-11	CERAMIC CHIP	0.01uF	10%	25V
C626	1-164-156-11	CERAMIC CHIP	0.1uF		25V
C627	1-104-847-11	TANTAL. CHIP	22uF	20%	4V
C629	1-162-919-11	CERAMIC CHIP	22PF	5%	50V
C630	1-162-970-11	CERAMIC CHIP	0.01uF	10%	25V
C631	1-164-156-11	CERAMIC CHIP	0.1uF		25V
C632	1-164-156-11	CERAMIC CHIP	0.1uF		25V
C633	1-124-584-00	ELECT	100uF	20%	10V
C634	1-162-964-11	CERAMIC CHIP	0.001uF	10%	50V
C635	1-162-970-11	CERAMIC CHIP	0.01uF	10%	25V
C638	1-164-346-11	CERAMIC CHIP	1uF		16V
C801	1-164-156-11	CERAMIC CHIP	0.1uF		25V
C802	1-164-156-11	CERAMIC CHIP	0.1uF		25V
C803	1-164-156-11	CERAMIC CHIP	0.1uF		25V
C804	1-115-467-11	CERAMIC CHIP	0.22uF	10%	10V

MAIN

Ref. No.	Part No.	Description			Remarks
C805	1-162-970-11	CERAMIC CHIP	0.01uF	10%	25V
C806	1-162-974-11	CERAMIC CHIP	0.01uF		50V
C807	1-115-467-11	CERAMIC CHIP	0.22uF	10%	10V
C808	1-162-968-11	CERAMIC CHIP	0.0047uF	10%	50V
C809	1-162-970-11	CERAMIC CHIP	0.01uF	10%	25V
C810	1-164-156-11	CERAMIC CHIP	0.1uF		25V
C811	1-162-962-11	CERAMIC CHIP	470PF	10%	50V
C812	1-162-970-11	CERAMIC CHIP	0.01uF	10%	25V
C813	1-107-826-11	CERAMIC CHIP	0.1uF	10%	16V
C814	1-162-970-11	CERAMIC CHIP	0.01uF	10%	25V
C815	1-107-826-11	CERAMIC CHIP	0.1uF	10%	16V
		< CONNECTOR >			
CN401	1-784-342-21	HOUSING, CONNECTOR 2P			
* CN402	1-785-877-21	HOUSING, CONNECTOR 4P			
CN601	1-818-127-11	CONNECTOR, FFC/FPC 15P (ZIF L)			
CN802	1-573-364-11	CONNECTOR, FFC/FPC 24P			
		< DIODE >			
D101	8-719-083-04	DIODE RSB6.8STE61			
D201	8-719-083-04	DIODE RSB6.8STE61			
D301	8-719-069-54	DIODE UDZSTE-175.1B (EJ100:US,CND/ EJ101:EXCEPT TH/EJ101CK/EJ106CK)			
D302	8-719-069-54	DIODE UDZSTE-175.1B (EJ100:US,CND/ EJ101:EXCEPT TH/EJ101CK/EJ106CK)			
D303	8-719-083-04	DIODE RSB6.8STE61			
D304	8-719-988-61	DIODE 1SS355TE-17			
D305	8-719-988-61	DIODE 1SS355TE-17			
D306	8-719-069-54	DIODE UDZSTE-175.1B (EJ100:US,CND/ EJ101:EXCEPT TH/EJ101CK/EJ106CK)			
D402	8-719-081-34	DIODE RB160M-30TR			
D402	8-719-085-43	DIODE MA2YD2300LS0			
D403	8-719-085-43	DIODE MA2YD2300LS0			
D404	8-719-988-61	DIODE 1SS355TE-17			
D405	8-719-081-34	DIODE RB160M-30TR			
D405	8-719-085-43	DIODE MA2YD2300LS0			
D407	8-719-988-61	DIODE 1SS355TE-17			
D408	8-719-069-54	DIODE UDZSTE-175.1B			
D409	8-719-988-61	DIODE 1SS355TE-17			
D410	8-719-083-04	DIODE RSB6.8STE61			
D601	8-719-083-04	DIODE RSB6.8STE61			
D802	8-719-072-70	DIODE MA2ZD14001S0			
D803	8-719-069-54	DIODE UDZSTE-175.1B			
D805	8-719-083-04	DIODE RSB6.8STE61			
		< FERRITE BEAD >			
FB101	1-216-864-11	METAL CHIP	0	5%	1/10W
FB201	1-216-864-11	METAL CHIP	0	5%	1/10W
FB301	1-414-813-11	FERRITE	0uH	(EJ100:US,CND/ EJ101:EXCEPT TH/EJ101CK/EJ106CK)	
FB301	1-216-295-91	SHORT CHIP	0	(EJ100:EXCEPT US,CND/EJ101:TH)	
FB302	1-414-813-11	FERRITE	0uH	(EJ100:US,CND/ EJ101:EXCEPT TH/EJ101CK/EJ106CK)	
FB304	1-216-295-91	SHORT CHIP	0		
FB401	1-216-864-11	METAL CHIP	0	5%	1/10W
FB402	1-216-864-11	METAL CHIP	0	5%	1/10W
FB403	1-216-295-91	SHORT CHIP	0		
FB404	1-216-864-11	METAL CHIP	0	5%	1/10W
FB405	1-216-864-11	METAL CHIP	0	5%	1/10W
FB406	1-216-864-11	METAL CHIP	0	5%	1/10W
FB408	1-216-864-11	METAL CHIP	0	5%	1/10W
		< IC >			
IC301	8-759-681-65	IC TA2120FN(EL)			
IC403	6-703-034-01	IC BH6580KV			
IC601	6-803-922-01	IC BU9354CKV			
IC602	6-704-730-01	IC MSM51X4400E-10TSK-F (EXCEPT US,CND)			
IC603	6-704-412-01	IC GLT4160N04-100TC (EJ100:US,CND/EJ106CK:US,CND)			
IC801	6-803-923-01	IC T5AW5-04CD			
		< JACK >			
J302	1-816-153-61	JACK (🎧) (EJ100:US,CND/ EJ101:EXCEPT TH/EJ101CK/EJ106CK)			
J302	1-818-051-11	JACK (🎧) (EJ100:AEP,UK,AUS,EE,EA/EJ101:TH)			
J401	1-778-153-21	JACK,DC(POLARITY UNIFIED TYPE) (DC IN 4.5V) (EJ100:TH/EJ101CK/EJ106CK:AUS)			
J401	1-778-153-51	JACK,DC(POLARITY UNIFIED TYPE) (DC IN 4.5V) (EJ100:EXCEPT TH/EJ101/EJ106CK:US,CND)			
		< COIL >			
L301	1-216-295-91	SHORT CHIP	0		
L305	1-216-295-91	SHORT CHIP	0		
L401	1-400-373-21	INDUCTOR	4.7uH		
L402	1-400-373-21	INDUCTOR	4.7uH		
L403	1-400-145-21	INDUCTOR	47uH		
L404	1-400-388-21	INDUCTOR	220uH		
L405	1-400-145-21	INDUCTOR	47uH (EJ100:AUS)		
L406	1-400-145-21	INDUCTOR	47uH		
L407	1-419-387-21	INDUCTOR	100uH		
L409	1-400-145-21	INDUCTOR	47uH		
L411	1-400-387-21	INDUCTOR	47uH		
L601	1-400-389-21	INDUCTOR	10uH		
L602	1-216-295-91	SHORT CHIP	0		
L604	1-216-295-91	SHORT CHIP	0		
L605	1-216-295-91	SHORT CHIP	0		
		< TRANSISTOR >			
Q402	8-729-106-60	TRANSISTOR 2SB1132-T100-Q			
Q403	8-729-602-21	TRANSISTOR 2SC4154TP-1F			
Q404	8-729-054-79	TRANSISTOR 2SB167900LSO			
Q406	8-729-602-36	TRANSISTOR 2SA1602TP-1F			
Q407	8-729-905-35	TRANSISTOR 2SC4081T106R			
Q601	8-729-054-79	TRANSISTOR 2SB167900LSO			
		< RESISTOR >			
R101	1-216-829-11	METAL CHIP	4.7K	5%	1/10W
R102	1-216-833-11	METAL CHIP	10K	5%	1/10W
R103	1-216-833-11	METAL CHIP	10K	5%	1/10W
R104	1-216-793-11	METAL CHIP	4.7	5%	1/10W
R201	1-216-829-11	METAL CHIP	4.7K	5%	1/10W
R202	1-216-833-11	METAL CHIP	10K	5%	1/10W
R203	1-216-833-11	METAL CHIP	10K	5%	1/10W
R204	1-216-793-11	METAL CHIP	4.7	5%	1/10W
R302	1-216-864-11	METAL CHIP	0	5%	1/10W
R313	1-218-871-11	METAL CHIP	10K	0.5%	1/10W (EJ100:US,CND/EJ101/EJ101CK/EJ106CK)

Ref. No.	Part No.	Description			Remarks
R313	1-216-833-11	METAL CHIP	10K	5%	1/10W
					(EJ100:EXCEPT US,CND)
R314	1-216-821-11	METAL CHIP	1K	5%	1/10W
					(EJ100:US,CND/EJ101:EXCEPT TH/
					EJ101CK/EJ106CK)
R314	1-216-864-11	METAL CHIP	0	5%	1/10W
					(EJ100:EXCEPT US,CND/EJ101:TH)
R315	1-216-295-91	SHORT CHIP	0		
R322	1-216-793-11	METAL CHIP	4.7	5%	1/10W
R401	1-216-797-11	METAL CHIP	10	5%	1/10W
R404	1-216-864-11	METAL CHIP	0	5%	1/10W
R409	1-216-789-11	METAL CHIP	2.2	5%	1/10W
R411	1-218-903-11	METAL CHIP	220K	0.5%	1/10W
R412	1-218-887-11	METAL CHIP	47K	0.5%	1/10W
R413	1-216-841-11	METAL CHIP	47K	5%	1/10W
R416	1-216-813-11	METAL CHIP	220	5%	1/10W
R419	1-216-833-11	METAL CHIP	10K	5%	1/10W
R421	1-216-833-11	METAL CHIP	10K	5%	1/10W
R427	1-216-841-11	METAL CHIP	47K	5%	1/10W
R428	1-216-845-11	METAL CHIP	100K	5%	1/10W
R434	1-216-845-11	METAL CHIP	100K	5%	1/10W
R436	1-216-864-11	METAL CHIP	0	5%	1/10W
R438	1-216-833-11	METAL CHIP	10K	5%	1/10W
R439	1-216-841-11	METAL CHIP	47K	5%	1/10W
R440	1-216-841-11	METAL CHIP	47K	5%	1/10W
R444	1-216-845-11	METAL CHIP	100K	5%	1/10W
R446	1-216-864-11	METAL CHIP	0	5%	1/10W
R447	1-216-864-11	METAL CHIP	0	5%	1/10W
R448	1-414-760-21	FERRITE	0uH		
R457	1-216-833-11	METAL CHIP	10K	5%	1/10W
R601	1-216-845-11	METAL CHIP	100K	5%	1/10W
R602	1-216-845-11	METAL CHIP	100K	5%	1/10W
R603	1-216-845-11	METAL CHIP	100K	5%	1/10W
R604	1-216-845-11	METAL CHIP	100K	5%	1/10W
R605	1-216-845-11	METAL CHIP	100K	5%	1/10W
R608	1-216-789-11	METAL CHIP	2.2	5%	1/10W
R610	1-216-845-11	METAL CHIP	100K	5%	1/10W
R611	1-216-825-11	METAL CHIP	2.2K	5%	1/10W
R612	1-216-864-11	METAL CHIP	0	5%	1/10W
R613	1-216-817-11	METAL CHIP	470	5%	1/10W
R614	1-216-805-11	METAL CHIP	47	5%	1/10W
R615	1-216-864-11	METAL CHIP	0	5%	1/10W
R616	1-216-857-11	METAL CHIP	1M	5%	1/10W
R618	1-216-821-11	METAL CHIP	1K	5%	1/10W
R619	1-216-821-11	METAL CHIP	1K	5%	1/10W
R620	1-216-821-11	METAL CHIP	1K	5%	1/10W
R621	1-216-295-91	SHORT CHIP	0		
R622	1-216-821-11	METAL CHIP	1K	5%	1/10W
R628	1-216-833-11	METAL CHIP	10K	5%	1/10W
R631	1-216-817-11	METAL CHIP	470	5%	1/10W
					(EXCEPT TH)
R631	1-216-821-11	METAL CHIP	1K	5%	1/10W
					(TH)
R650	1-216-857-11	METAL CHIP	1M	5%	1/10W
R801	1-216-295-91	SHORT CHIP	0		
R802	1-216-845-11	METAL CHIP	100K	5%	1/10W
R803	1-216-837-11	METAL CHIP	22K	5%	1/10W
R804	1-216-864-11	METAL CHIP	0	5%	1/10W
					(EXCEPT AEP,UK,EE)

Ref. No.	Part No.	Description			Remarks
R805	1-216-821-11	METAL CHIP	1K	5%	1/10W
R807	1-414-760-21	FERRITE	0uH		
R808	1-216-845-11	METAL CHIP	100K	5%	1/10W
R809	1-216-845-11	METAL CHIP	100K	5%	1/10W
R810	1-414-760-21	FERRITE	0uH		
R811	1-216-849-11	METAL CHIP	220K	5%	1/10W
R812	1-216-864-11	METAL CHIP	0	5%	1/10W
R814	1-216-837-11	METAL CHIP	22K	5%	1/10W
					(EJ100:US,CND/EJ106CK:US,CND)
R816	1-216-833-11	METAL CHIP	10K	5%	1/10W
R825	1-216-864-11	METAL CHIP	0	5%	1/10W
R827	1-216-833-11	METAL CHIP	10K	5%	1/10W
R830	1-216-864-11	METAL CHIP	0	5%	1/10W
R832	1-216-864-11	METAL CHIP	0	5%	1/10W
R833	1-216-833-11	METAL CHIP	10K	5%	1/10W
R836	1-216-864-11	METAL CHIP	0	5%	1/10W
R838	1-216-833-11	METAL CHIP	10K	5%	1/10W
R841	1-216-845-11	METAL CHIP	100K	5%	1/10W
R845	1-216-864-11	METAL CHIP	0	5%	1/10W
					(AEP,UK,EE)
R849	1-216-833-11	METAL CHIP	10K	5%	1/10W
R854	1-216-864-11	METAL CHIP	0	5%	1/10W
R858	1-216-864-11	METAL CHIP	0	5%	1/10W
R859	1-216-864-11	METAL CHIP	0	5%	1/10W
R863	1-216-837-11	METAL CHIP	22K	5%	1/10W
R864	1-216-837-11	METAL CHIP	22K	5%	1/10W
R871	1-216-849-11	METAL CHIP	220K	5%	1/10W
R872	1-216-833-11	METAL CHIP	10K	5%	1/10W
R880	1-216-295-91	SHORT CHIP	0		
R902	1-216-833-11	METAL CHIP	10K	5%	1/10W
R903	1-216-833-11	METAL CHIP	10K	5%	1/10W
R904	1-216-833-11	METAL CHIP	10K	5%	1/10W
R905	1-216-833-11	METAL CHIP	10K	5%	1/10W
R906	1-216-833-11	METAL CHIP	10K	5%	1/10W
R907	1-216-833-11	METAL CHIP	10K	5%	1/10W
R908	1-216-833-11	METAL CHIP	10K	5%	1/10W
R909	1-216-833-11	METAL CHIP	10K	5%	1/10W
R910	1-216-833-11	METAL CHIP	10K	5%	1/10W
R911	1-216-833-11	METAL CHIP	10K	5%	1/10W
R912	1-216-833-11	METAL CHIP	10K	5%	1/10W
R913	1-216-833-11	METAL CHIP	10K	5%	1/10W
R914	1-216-833-11	METAL CHIP	10K	5%	1/10W
R915	1-216-833-11	METAL CHIP	10K	5%	1/10W
R916	1-216-833-11	METAL CHIP	10K	5%	1/10W
R917	1-216-833-11	METAL CHIP	10K	5%	1/10W
R918	1-216-833-11	METAL CHIP	10K	5%	1/10W
R919	1-216-833-11	METAL CHIP	10K	5%	1/10W
R920	1-216-833-11	METAL CHIP	10K	5%	1/10W
		< SWITCH >			
S802	1-572-499-21	SWITCH, TACTIL (VOL+)			
S803	1-572-499-21	SWITCH, TACTIL (VOL-)			
S809	1-762-805-41	SWITCH, PUSH (1 KEY) (OPEN)			
S810	1-572-922-11	SWITCH, SLIDE (HOLD➡)			
		< VIBRATOR >			
X601	1-795-101-21	VIBRATOR, CERAMIC (16.9344MHz)			

****

Ref. No.	Part No.	Description	Remarks
		MISCELLANEOUS **********	
4	1-478-412-11	SWITCH UNIT	
⚠107	X-3380-950-1	OPTICAL PICK-UP (DAX-25E RP ASSY)	
LCD801	1-805-461-11	DISPLAY PANEL, LIQUID CRYSTAL	
M901	A-3180-965-A	MOTOR ASSY, TURN TABLE (SPINDLE)	
M902	A-3180-966-A	MOTOR ASSY, SLED (including GEAR)	
**********			
		ACCESSORIES **********	
	1-251-824-41	CONNECTING PACK, CAR (CPA-7)	(EJ101CK/EJ106CK)
	1-477-524-13	REMOTE CONTROL UNIT (RM-MC20)	(EJ100:E18)
	1-477-628-11	REMOTE COMMANDER (RM-MC24C)	(EJ101CK/EJ106CK)
	1-478-402-11	REMOTE COMMANDER (RM-MC26)(SILVER)	(EJ100:US,CND/EJ101:E18,C&SA)
	1-478-402-21	REMOTE COMMANDER (RM-MC26)	(BLACK,BLUE)(EJ100:CND)
	1-478-402-31	REMOTE COMMANDER (RM-MC26)	(WHITE)(EJ100:CND)
	1-478-402-41	REMOTE COMMANDER (RM-MC26)	(EJ101:AEP,UK,EE)
⚠	1-478-432-11	ADAPTOR, AC (AC-ES455K)(EJ100:AEP,E18,EE/	EJ101:AEP,UK,EE,E18/EJ101CK:E18)
⚠	1-478-432-31	ADAPTOR, AC (AC-ES455K) (EJ101:TH)	
⚠	1-478-433-11	ADAPTOR, AC (AC-ES455K) (EJ100:UK,EA)	
⚠	1-478-434-11	ADAPTOR, AC (AC-ES455K)	(EJ101:C&SA/EJ101CK:C&SA,MX/ EJ106CK:US,CND)
⚠	1-478-435-11	ADAPTOR, AC (AC-ES455K)	(EJ100:AUS/EJ106CK:AUS)
	1-792-970-41	CORD, CAR BATTERY (DCC-E2455)	(EJ101CK/EJ106CK)
	2-023-355-11	MANUAL, INSTRUCTION	(ENGLISH, SPANISH, PORTUGUESE) (EJ101:AEP,UK)
	2-023-355-21	MANUAL, INSTRUCTION	(FRENCH, GERMAN, DUTCH) (EJ101:AEP)
	2-023-355-31	MANUAL, INSTRUCTION	(ITALIAN, SWEDISH, FINNISH) (EJ101:AEP)
	2-023-355-41	MANUAL, INSTRUCTION	(ENGLISH, HUNGARIAN, RUSSIAN) (EJ101:EE)
	2-023-355-51	MANUAL, INSTRUCTION	(POLISH, CZECH, SLOVAKIAN) (EJ101:EE)
	2-055-400-11	MANUAL, INSTRUCTION (THAI)	(EJ100, EJ101:TH)
	3-249-845-11	MANUAL, INSTRUCTION	(ENGLISH, FRENCH, SPANISH, PORTUGUESE) (EJ101CK/EJ106CK:CND,AUS)
	3-249-845-21	MANUAL, INSTRUCTION (ENGLISH)	(EJ106CK:US)
	3-261-647-11	MANUAL, INSTRUCTION (ENGLISH, SPANISH,	PORTUGUESE) (EJ100:AEP,UK,AUS,CND/ EJ101:E18,C&SA/EJ101CK/EJ106CK:CND,AUS)
	3-261-647-21	MANUAL, INSTRUCTION (FRENCH, GERMAN,	DUTCH) (EJ100:AEP,CND/EJ106CK:CND)
	3-261-647-31	MANUAL, INSTRUCTION	(ITALIAN, SWEDISH, FINNISH) (EJ100:AEP)
	3-261-647-41	MANUAL, INSTRUCTION	(ENGLISH, HUNGARIAN, RUSSIAN) (EJ100:EE)
	3-261-647-51	MANUAL, INSTRUCTION	(POLISH, CZECH, SLOVAKIAN) (EJ100:EE)
	3-261-647-61	MANUAL, INSTRUCTION	(ENGLISH, TRADITIONAL CHINESE, SIMPLIFIED CHINESE) (EJ100:E18)
	3-261-647-71	MANUAL, INSTRUCTION (ENGLISH)	(EJ100:US/EJ106CK:US)
	3-261-647-81	MANUAL, INSTRUCTION (ARABIC) (EJ100:EA)	
	3-261-647-91	MANUAL, INSTRUCTION (ENGLISH) (EJ100:EA)	
	8-954-007-92	RECEIVER, EAR MDR-027LP (EJ106CK:US)	
	8-954-008-90	RECEIVER, EAR MDR-E808SP (EJ100:E18)	
	8-954-008-93	RECEIVER,EAR MDR-E808LP	(EJ100:AEP,UK,AUS,EE,EA,E18,TH/EJ101:AEP, UK,EE,TH/EJ101CK/EJ106CK:CND,AUS)
	8-954-046-92	HEADPHONE MDR-J010LP/W2…(WHITE)	(EJ100:CND)
	8-954-046-93	HEADPHONE MDR-J010LP/B	…(SILVER) (EJ100:US,CND/EJ101:E18,C&SA)
	8-954-046-94	HEADPHONE MDR-J010LP/B1…(BLACK)	(EJ100:CND)

The components identified by mark ⚠ or dotted line with mark ⚠ are critical for safety. Replace only with part number specified.	Les composants identifiés par une marque ⚠ sont critiques pour la sécurité. Ne les remplacer que par une piéce portant le numéro spécifié.

MEMO

REVISION HISTORY

Clicking the version allows you to jump to the revised page.
Also, clicking the version at the upper right on the revised page allows you to jump to the next revised page.

Ver.	Date	Description of Revision
1.0	2004.01	New
1.1	2004.02	Addition of D-EJ100 (CND:BLUE), D-EJ101 (E18) and D-EJ101CK (E18). (ENG-04003)
1.2	2004.04	Addition of D-EJ100 (EA) and D-EJ101 (AEP, UK, EE, TH) models.
1.3	2004.05	Addition of D-EJ100 (TH) model.
1.4	2005.04	Addition of D-EJ100 (UK) model.