Owner's Guide

QUALIA 002

Read this first

Before operating the unit, please read this manual thoroughly, and retain it for future reference.

WARNING

To prevent fire or shock hazard, do not expose the unit to rain or moisture.

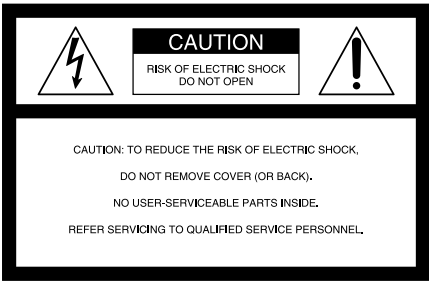

This symbol is intended to alert the user to the presence of uninsulated "dangerous voltage" within the product's enclosure that may be of sufficient magnitude to constitute a risk of electric shock to persons.

This symbol is intended to alert the user to the presence of important operating and maintenance (servicing) instructions in the literature accompanying the appliance.

For customers in the U.S.A. and CANADA

RECYCLING LITHIUM-ION BATTERIES

Lithium-Ion batteries are recyclable.
You can help preserve our environment by returning your used rechargeable batteries to the collection and recycling location nearest you.
For more information regarding recycling of rechargeable batteries, call toll free 1-800-822-8837, or visit http://www.rbrc.org/

Caution: Do not handle damaged or leaking Lithium-Ion batteries.

For customers in the U.S.A.

If you have any questions about this product, you may call:
Sony Customer Information Center 1-800-222-SONY (7669)
The number below is for the FCC related matters only.
Regulatory Information

Declaration of Conformity

Trade Name: SONY
Model No.: Q002-HDR1
Responsible Party: Sony Electronics Inc.
Address: 16450 W. Bernardo Dr, San Diego, CA 92127 U.S.A.
Telephone No.: 858-942-2230
This device complies with Part 15 of the FCC Rules. Operation is subject to the following two conditions: (1) This device may not cause harmful interference, and (2) this device must accept any interference received, including interference that may cause undesired operation.

Owner's Record

The model and serial numbers are located on the bottom. Record the serial number in the space provided below. Refer to these numbers whenever you call upon your Sony dealer regarding this product.
Model No. Q002-HDR1 _____
Serial No. _____
Model No.AC-_____
Serial No._____

CAUTION

You are cautioned that any changes or modifications not expressly approved in this manual could void your authority to operate this equipment.

Note:

- This equipment has been tested and found to comply with the limits for a Class B digital device, pursuant to Part 15 of the FCC Rules.
  These limits are designed to provide reasonable protection against harmful interference in a residential installation. This equipment generates, uses, and can radiate radio frequency energy and, if not installed and used in accordance with the instructions, may cause harmful interference to radio communications. However, there is no guarantee that interference will not occur in a particular installation. If this equipment does cause harmful interference to radio or television reception, which can be determined by turning the equipment off and on, the user is encouraged to try to correct the interference by one or more of the following measures:
  – Reorient or relocate the receiving antenna.
  – Increase the separation between the equipment and receiver.
  – Connect the equipment to an outlet on a circuit different from that into which the receiver is connected.
  – Consult the dealer or an experienced radio/TV technician for help.
  The interface cable supplied must be used with the equipment in order to comply with the limits for a digital device pursuant to Subpart B of Part 15 of FCC Rules.

Table of Contents

Read this first 2

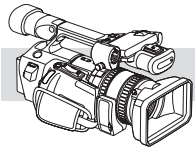

Quick Start Guide

Recording movies 8

Notes on use 12

Getting started

Step 1: Checking supplied items 14

Step 2: Charging the battery pack 15

- Using an outside power source 18
- Charging the battery pack attached to the camcorder 19

Step 3: Turning the power on 20

Step 4: Adjusting the LCD panel and viewfinder 20

- Adjusting the LCD panel 20
- Adjusting the viewfinder 21

Step 5: Setting the date and time 22

Step 6: Inserting a cassette tape 23

Step 7: Setting the screen language 24

Attaching the supplied accessories 25

- Attaching the shoulder brace 25
- Attaching the external microphone 26
- Attaching the shoulder strap 28
- Attaching the shoe adaptor 28
- Removing the lens hood 28

Recording

Recording movies 29

- Recording for a longer time DV 31
- Using zoom 31
- Recording in mirror mode 32
- Displaying the recording setup information – Status check 33

Adjusting the exposure 34
Adjusting the exposure for backlit subjects 34
Recording the subject lit by strong light – SPOT LIGHT 34
Adjusting the white balance 35

Recording using manual adjustments 36
Adjusting the iris 37
Adjusting the gain 37
Adjusting the shutter speed 38
Adjusting the volume of light – ND FILTER 39
Displaying the zebra pattern to adjust the brightness 40

Adjusting the focus 41
Adjusting the focus manually 41
Enhancing the outline to focus – PEAKING 42

Customizing the picture quality or sound 43
Customizing the picture quality – PICTURE PROFILE 43
Adjusting the audio recording level – Microphone volume level 46

Recording a picture using various features 46
Developing scenes smoothly – Shot transition 46
Fading in and out of a scene– FADER 48
Recording an index signal at the beginning of recording 49

Reviewing the most recently recorded scenes – Rec Review 50

Playback

Viewing movies 51
Playing back in various modes 52

Various playback functions 53
Searching for the last scene of the most recent recording – END SEARCH 53
Displaying the screen indicators 53
Displaying the date/time and camera settings data – Data code 53
Displaying the video information – Status check 54

Playing the picture on a TV 55
Viewing the picture on a high definition TV 55
Viewing the picture on a 16:9 TV or a 4:3 TV 57

Locating a scene on a tape for playback 58
Searching quickly for a desired scene – Zero set memory 58
Searching for a scene by date of recording – Date search 59
Searching for a recording start point – Index search 59

➡*continued*

Advanced operations

Using the Menu

Selecting menu items 60
Menu items 61
Using the (CAMERA SET) menu – STDYSHOT TYP/FRAME REC, etc. 62
Using the (AUDIO SET) menu – AUDIO MIX, etc. 66
Using the (LCD/VF SET) menu – LCD COLOR, etc. 68
Using the (IN/OUT REC) menu – REC FORMAT/TV TYPE, etc. 69
Using the (OTHERS) menu – CLOCK SET/WORLD TIME, etc. 74
Customizing Personal Menu 77
Assigning the functions 80

Dubbing/Editing

Dubbing to another tape 82
Recording pictures from a VCR or TV 86
Connecting to a computer 89
Dubbing sound to a recorded tape DV 90
Connecting an analog VCR to the computer via your camcorder DV
– Signal conversion function 93

Troubleshooting

Troubleshooting 95
Warning indicators and messages 101

Additional Information

Using your camcorder abroad 103
HDV format and recording/playback 104
About the “InfoLITHIUM” battery pack 105
About i.LINK 107
Maintenance and precautions 108
Specification 111

Quick Reference

Identifying parts and controls 114
Index 122

Note on the icons used in this manual

HDV1080i : Features available for the HDV format only.
DV : Features available for the DV format only.

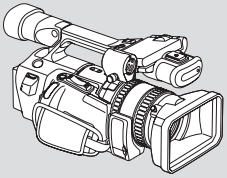

Quick Start Guide

Recording movies

1 Attach the charged battery pack to the camcorder.

To charge the battery, see page 15.

Press the battery pack and slide it down.

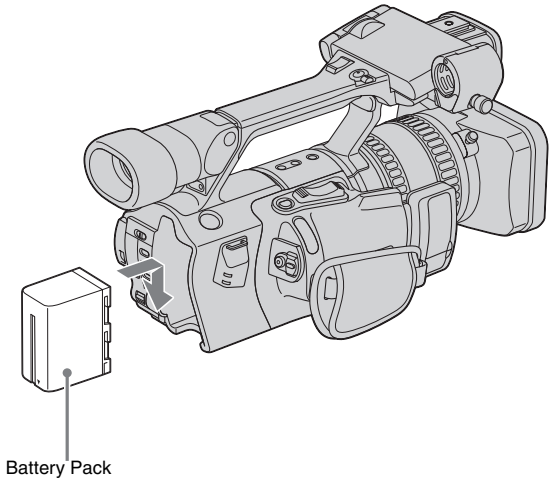

2 Insert a cassette into the camcorder.

❶ Slide the OPEN/EJECT lever in the direction of the arrow to open the lid.
The cassette compartment comes out automatically.

❷ Insert the cassette with its window-side facing out, then push the center of the back of the cassette.

❸ Press PUSH on the cassette compartment.
Close the cassette lid after the cassette compartment slides back in by itself.

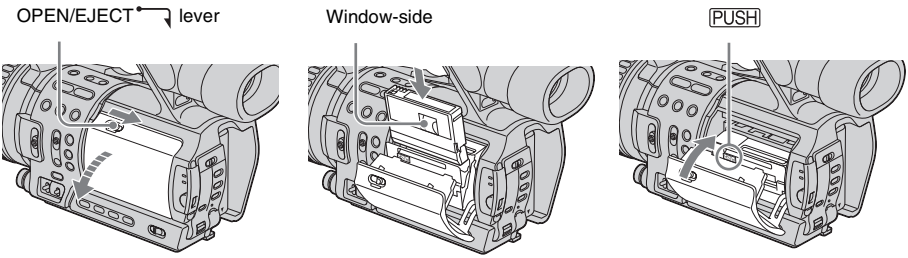

3 Start recording while checking the subject on the LCD screen.

The date and time is not set up in the default setting. To set the date and time, see page 22.
The pictures are recorded in the HDV format in the default setting. To record in the DV format, see page 70.

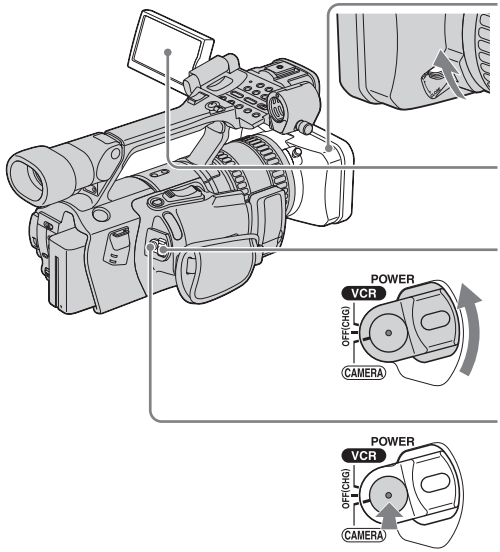

1 Open the hood shutter.

2 Open the LCD panel and adjust the angle.

3 While pressing the green button, set the POWER switch to CAMERA.

4 Press REC START/STOP.
Recording starts. To change to standby mode, press REC START/STOP again.

4 View the recorded picture on the LCD screen.

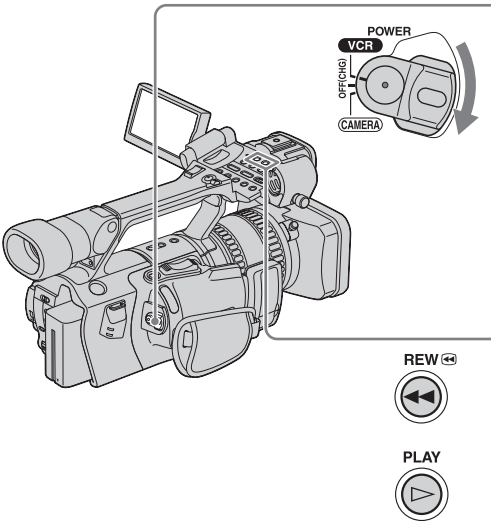

❶ **While pressing the green button, set the POWER switch to VCR.**

❷ **Press ◀◀ (rewind).**

❸ **Press ▶ (play) to start the playback.**
To stop, press ■ (stop).

To turn off the power, set the POWER switch to OFF (CHG).

Notes on use

Your camcorder is capable of recording in both HDV and DV formats. You can use only mini DV cassettes in your camcorder.

The HDV standards

- Digital high-definition (HD) video signals are recorded and played back on a DV format cassette.
- HDV signals are compressed in MPEG2 format, which is adopted in BS (broadcast satellite) digital and terrestrial digital HDTV broadcastings and in Blu-ray disc recorders.

Tip

- Your camcorder adopts the HDV1080i specification, which utilizes 1080 effective scanning lines, within the HDV standards, and records pictures at the image bit rate of about 25 Mbps. The i.LINK Interface is adopted as the digital interface enabling a digital connection with TVs and personal computers compatible with the HDV format.

Recording

- Before starting to record, test the recording function to make sure the picture and sound are recorded without any problems.
- Compensation for the contents of recordings cannot be provided, even if recording or playback is not possible due to a malfunction of the camcorder, storage media, etc.
- TV color systems differ depending on the country/region. To view your recordings on a TV, you need an NTSC system-based TV.
- Television programs, films, video tapes, and other materials may be copyrighted. Unauthorized recording of such materials may be contrary to the copyright laws.

The LCD panel, viewfinder, and lens

- Exposing the LCD screen, the viewfinder, or the lens to direct sunlight for long periods of time may cause malfunctions. Be careful when placing the camera near a window or outdoors.
- Do not aim at the sun. Doing so might cause your camcorder to malfunction. Take pictures of the sun only in low light conditions, such as at dusk.

Playing back HDV tapes on other devices

A tape recorded in the HDV format cannot be played back on a device that is not compatible with the HDV format. The screen appears blue. Check the contents of tapes by playing them back on this camcorder prior to playing them back on other devices.

Connecting other devices

Before connecting your camcorder to other device such as a VCR or a computer with an i.LINK cable, be sure to insert the connector plug in the proper direction. If you insert the connector plug forcibly in the wrong direction, the terminal may be damaged, or this may cause a malfunction of your camcorder.

Using this manual

The images of the LCD screen and the viewfinder used on this manual are captured using a digital still camera, and thus may appear different from what you see.

Using the camcorder

- To ensure a good grip, fasten the grip belt as shown in the following illustration.

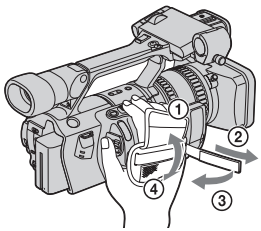

- You can change the language to be used for screen display on your camcorder (p. 24).

- Do not hold the camcorder by the following parts.

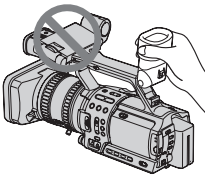

Viewfinder

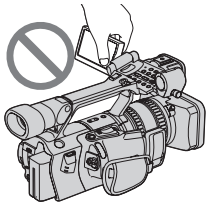

LCD panel

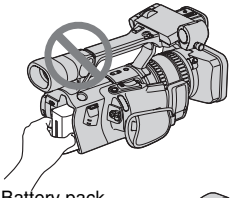

Battery pack

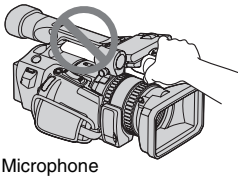

Microphone

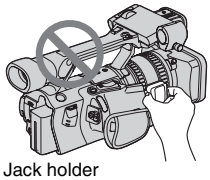

Jack holder

Step 1: Checking supplied items

Make sure you have following items supplied with your camcorder.
The number in parentheses indicates the number of that item supplied.

Lens hood (1)
This is attached to your camcorder.

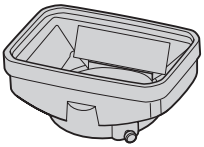

Note
- If you attach an optical filter (optional) or so, remove the lens hood.

Large eyecup (1)
To attach it to your camcorder, see page 21.

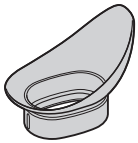

AC Adaptor/charge (1)

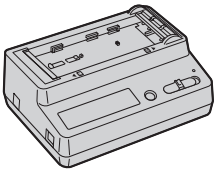

Power cord (1)

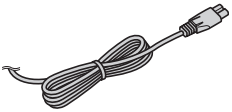

Connecting cord (DK-215) (1)

Rechargeable battery pack NP-F970 (1)

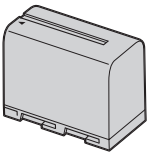

Wireless Remote Commander (1)

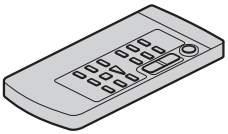

A/V connecting cable (1)

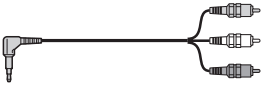

Component video cable (1)

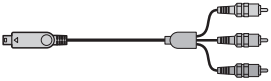

i.LINK cable (1)

Shoe adaptor (1)
To attach it to your camcorder, see page 28.

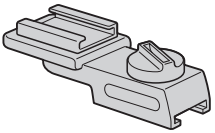

External microphone (monaural) (1)

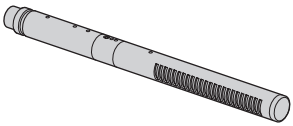

Microphone cable (1)

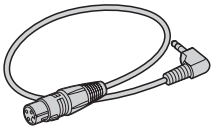

Wind screen (1)

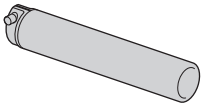

Shoulder brace (1)

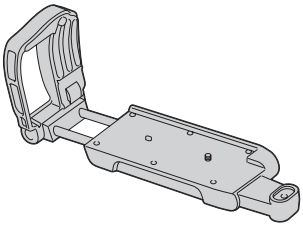

Shoulder strap (1)
To attach it to your camcorder, see page 28.

Size AA (R6) batteries for Remote Commander (2)
To insert the batteries, see page 119.

Size AA (R6P) battery for microphone (1)
To insert the batteries, see page 26.

Cleaning cassette (1)

Cleaning cloth (1)

Owner's Guide (This manual) (1)

Step 2: Charging the battery pack

You can charge the battery by attaching the **"InfoLITHIUM" battery pack (L series)** to your camcorder.

Note

- You cannot use batteries other than the "InfoLITHIUM" battery pack (L series) (p. 105).
- Do not short-circuit the DC plug of the AC Adaptor/charger with any metallic objects. This may cause a malfunction.
- Use a nearby wall outlet when using the AC Adaptor/charger. Disconnect the AC Adaptor/charger from the wall outlet immediately if any malfunction occurs.
- Do not place the AC Adaptor/charger at a narrow place such as between furniture and wall.

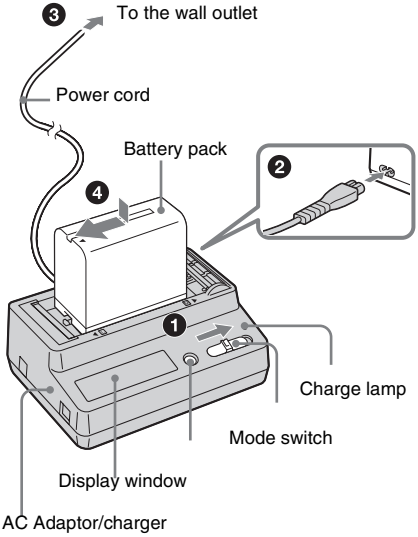

1 Set the mode switch to CHARGE.

2 Connect the power cord to the AC Adaptor/charger.

➡*continued*

3 **Connect the power cord to the wall outlet.**

4 **While pressing the battery back down, slide it in the direction of the arrow.**

The charge lamp lights up and charging starts.

Tip

- If you press DISPLAY CHANGE during charging, the display changes as follows:

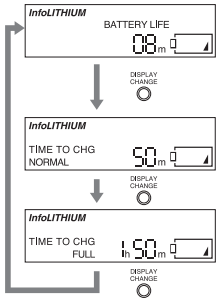

Remaining battery time

Remaining charging time fro practical use

Remaining time until full charge

When the battery was successfully charged

The battery mark on the display window will light up in the shape of a full battery ( ) that indicates that the battery has been sufficiently charged for use.

If you continue charging until the CHARGE lamp turns off and FULL appears on the display window, the battery has now been fully charged and can be used for a little longer period.

Remove the battery pack from the AC Adaptor/ charger.

To attach the battery pack to the camcorder

Press the battery pack and slide it down.

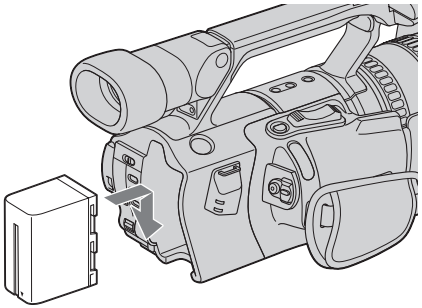

To remove the battery pack

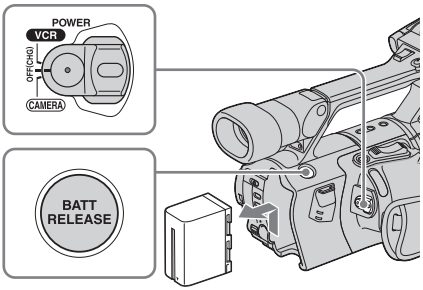

1 **Set the POWER switch to OFF.**

2 **Press BATT RELEASE and slide the battery pack up.**

To check the remaining battery – Battery Info

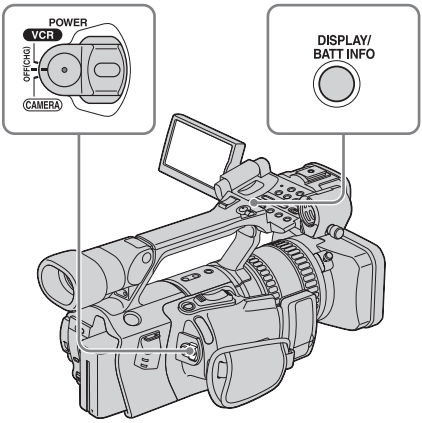

You can check the battery's current charge level and its current remaining recording time both during charging or when the power is turned off. The remaining recording time in the selected recording format appears.

1 **Set the POWER switch to OFF (CHG).**

2 **Open the LCD panel and adjust the angle.**

3 **Press DISPLAY/BATT INFO.**
The battery information appears for about 7 seconds.
Keep the button pressed to view it for about 20 seconds.

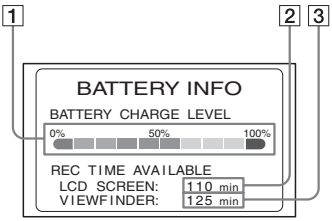

1 **Battery charge level: Displays approximate remaining amount of power left in the battery pack.**

2 **Possible recording time using the LCD panel.**

3 **Possible recording time using the viewfinder.**

Charging time

Approximate number of minutes required when you fully charge a fully discharged battery pack at 25°C (77°F). (10 – 30°C (50 – 86°F) recommended.)

Battery pack	Full charge (normal charge)
NP-F570	145 (85)
NP-F770	230 (170)
NP-F970 (supplied)	310 (250)

Note

- NP-F330/F530/500/510/710 battery packs cannot be used with your camcorder.

Recording time

Approximate number of minutes available when you use a fully charged battery pack at 25°C (77°F).

Recording in the HDV format

Battery pack	Continuous recording time	Typical recording time
NP-F570	110 125 125	60 65 65
NP-F770	235 260 255	130 130 130
NP-F970 (supplied)	360 390 385	200 205 205

Recording in the DV format

Battery pack	Continuous recording time	Typical recording time
NP-F570	120 130 130	65 65 65
NP-F770	255 275 275	140 140 140
NP-F970 (supplied)	380 410 410	210 215 215

➡*continued*

- The top figures show an approximate number of minutes when the LCD BACKLIGHT switch is set to ON.
- The middle figures show an approximate number of minutes when the LCD BACKLIGHT switch is set to OFF.
- The bottom figures show an approximate number of minutes when recording with the viewfinder.
- "Typical recording time" means an approximate number of minutes when recording while you repeatedly record, start/stop, move the POWER switch to change the power mode, and zoom. The actual battery life may be shorter.

Tip

- You can also use NP-F550/F730/F750/F960 battery packs. After charging these battery packs, make a trial recording with them before an actual recording to see the recording time. The recording time varies depending on the environment where the camcorder is used. Press DISPLAY/BATT INFO to display the recording time on the screen.

Playing time

Approximate number of minutes available when you use a fully charged battery pack at 25°C (77°F).

HDV format pictures

Battery pack	LCD panel opened*	LCD panel closed
NP-F570	175	195
NP-F770	360	400
NP-F970 (supplied)	545	605

DV format pictures

Battery pack	LCD panel opened*	LCD panel closed
NP-F570	200	235
NP-F770	415	480
NP-F970 (supplied)	630	725

* With the LCD BACKLIGHT switch set to ON.

Note

- The recording and playback time will be shorter when you use your camcorder in low temperature.
- The battery information will not be correctly displayed when the battery pack is discharged.

Using an outside power source

You can use the AC Adaptor/charger as the power source when you do not want the battery to run out.

PRECAUTION

Even if your camcorder is turned off, AC power (house current) is still supplied to it while connected to the wall outlet via the AC Adaptor/charger.

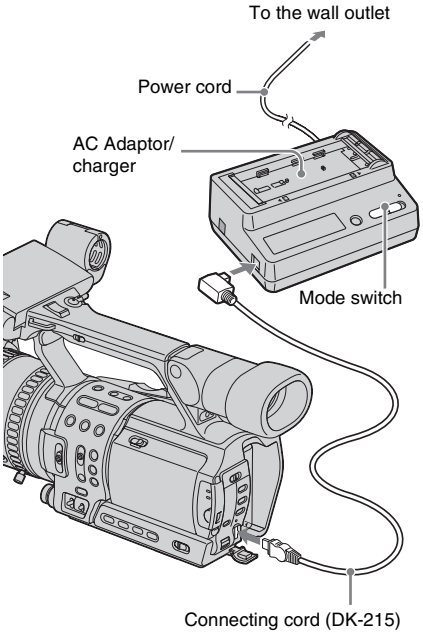

1 Set the mode switch to VCR/CAMERA.

No power will be supplied if the mode switch is set to CHARGE.

2 Connect the connecting cord (DK-215) to the DC IN jack of the camcorder.

3 **Connect the connecting cord (DK-215) to the AC Adaptor/charger.**

4 **Connect the power cord to the AC Adaptor/charger.**

5 **Connect the power cord to the wall outlet.**

Note

- When you use the camcorder on the battery pack, disconnect the connecting cord (DK-215) from the DC IN jack. Otherwise, no power is supplied from the battery pack.

Charging the battery pack attached to the camcorder

1 **Attach the battery (p. 16).**

2 **Connect the AC Adaptor/charger to the camcorder (p. 18).**

3 **Set the mode switch to VCR/CAMERA.**

4 **Set the POWER switch to OFF (CHG).**

The CHG (charge) lamp lights up and charging starts.
When the battery is fully charged, the CHG lamp goes out.
Disconnect the connecting cord (DK-215) from the DC IN jack of the camcorder.

Charging time

Approximate number of minutes required when you fully charge a fully discharged battery pack at 25°C (77°F). (10 – 30°C (50 – 86°F) recommended.)

Battery pack	
NP-F570	260
NP-F770	370
NP-F970 (supplied)	485

Note

- The CHG lamp flashes during charging in following conditions.
  – The battery pack is not attached correctly.
  – The battery pack is damaged.

Step 3: Turning the power on

You need to set the POWER switch to the respective power mode to record or play back pictures.
When using this camcorder for the first time, the [CLOCK SET] screen appears (p. 22).

While pressing the green button, set the POWER switch.

The power turns on.

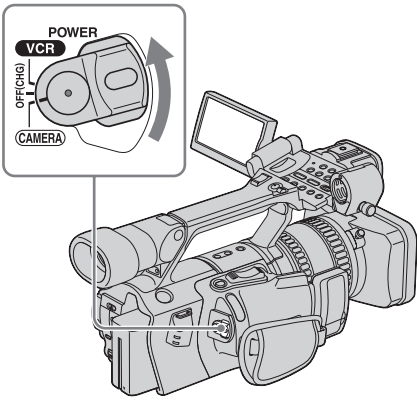

- CAMERA: To record pictures.
- VCR: To play or edit pictures.

To turn off the power

Set the POWER switch to OFF (CHG).

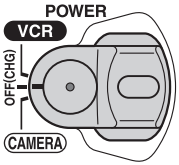

Step 4: Adjusting the LCD panel and viewfinder

Adjusting the LCD panel

You can adjust the angle and brightness of the LCD panel to meet various recording situations.
Even when there are obstructions between you and the subject, you can check the subject on the LCD screen during recording by adjusting the angle of the LCD panel.

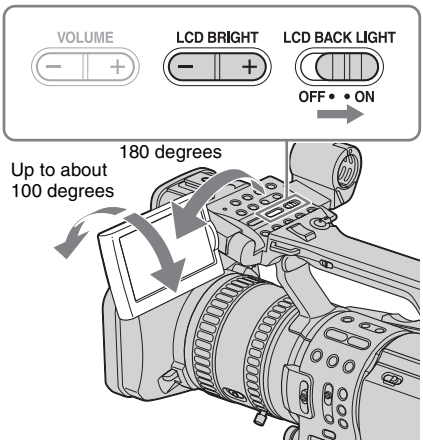

Open the LCD panel 180 degrees, then rotate it to the desired position.

To adjust the brightness of the LCD screen

Adjust the brightness by pressing LCD BRIGHT – or +.

Tip

- If you rotate the LCD panel until it faces down, you can close and restore the LCD panel to the original position with the LCD screen facing out.
- If you are using the battery pack for power source, you can select the brightness by setting [LCD BL LEVEL] on the [LCD/VF SET] menu (p. 68).
- When you use your camcorder in bright conditions using the battery pack, set the LCD BACKLIGHT switch to OFF (appears). This position saves battery power.
- Even if you change the brightness of the LCD panel, the brightness of recorded pictures is not affected.
- You can turn off the operation confirmation beep by setting [BEEP] on the (OTHERS) menu to [OFF] (p. 74).

Adjusting the viewfinder

You can view images using the viewfinder when you close the LCD panel. Use the viewfinder when the battery is running out, or when the screen is hard to see.

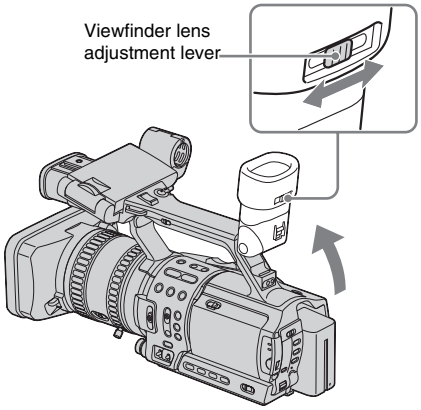

1 Lift up the viewfinder.

2 Adjust the viewfinder lens adjustment lever until the picture is clear.

When the picture in the viewfinder is hard to see

If you cannot see the picture in the viewfinder clearly under bright circumstances, use the supplied large eyecup.
To attach the large eyecup, stretch it a little and align it with the groove of the viewfinder, then slide it up to the end. You can attach the large eyecup facing either the right or left side.

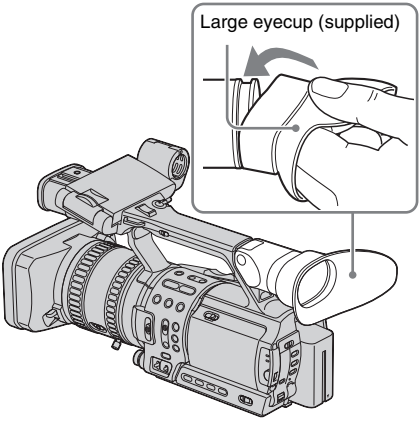

Tip

- To select the brightness of the viewfinder backlight when you are using the battery pack, select (LCD/VF SET) menu, then [VF B.LIGHT] (p. 68).

Step 5: Setting the date and time

Set the date and time when using this camcorder for the first time. If you do not set the date and time, the [CLOCK SET] screen appears every time you turn on your camcorder.

Note

- If you do not use your camcorder for about **3 months**, the built-in rechargeable button-type battery gets discharged and the date and time settings may be cleared from the memory. In that case, charge the rechargeable button-type battery (p. 110) and then set the date and time again.

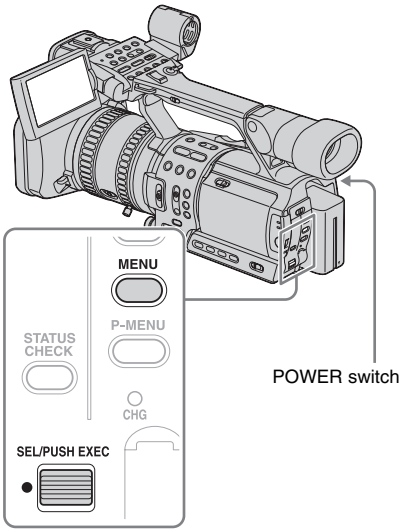

1 **Turn on your camcorder (p. 20).**

2 **Open the LCD panel and adjust the angle.**

Proceed to step 6 when you set the clock for the first time.

3 **Press MENU.**

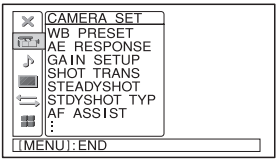

4 **Select the (OTHERS) menu by turning the SEL/PUSH EXEC dial, then press the dial.**

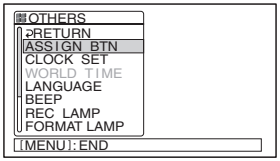

5 **Select [CLOCK SET] by turning the SEL/PUSH EXEC dial, then press the dial.**

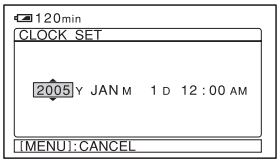

6 **Set [Y] (year) by turning the SEL/PUSH EXEC dial, then press the dial.**

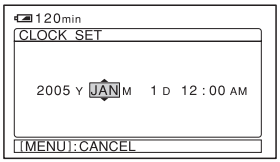

You can set any year up to the year 2079.

7 **Set [M] (month), [D] (day), hour and minute in the same way as was done in step 6, then press the dial.**

For midnight, set it to 12:00AM.
For midday, set it to 12:00PM.

Step 6: Inserting a cassette tape

You can use mini DV Mini DV cassettes only. For details on these cassettes (such as write-protection), see page 104.

Note

- Do not force the cassette into the compartment. This may cause a malfunction of your camcorder.

1 Slide the OPEN/EJECT lever in the direction of the arrow and open the lid.

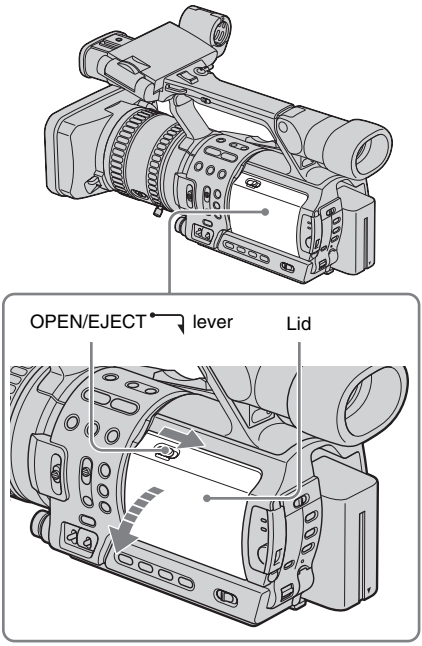

The cassette compartment automatically comes out and opens up.

2 Insert a cassette with its window-side facing out.

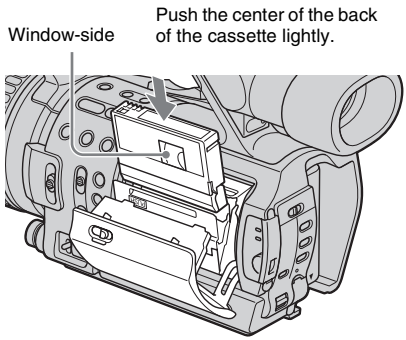

3 Press PUSH on the cassette compartment.

The cassette compartment automatically slides back in.

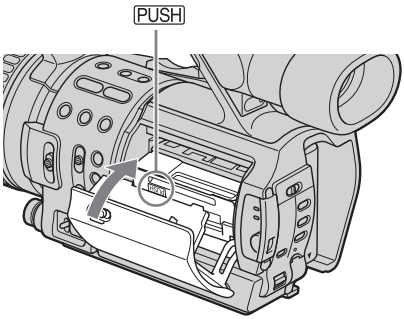

4 Close the lid.

To eject the cassette

1 **Slide the OPEN/EJECT lever in the direction of the arrow and open the lid.**
The cassette compartment automatically comes out.

2 **Take out the cassette, then press PUSH.**
The cassette compartment automatically slides back in.

3 **Close the lid.**

Step 7: Setting the screen language

You can select the language to be used on the LCD screen.

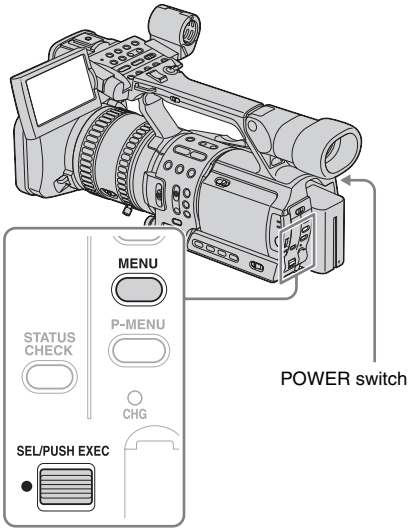

1 **Turn on your camcorder.**

2 **Open the LCD panel and adjust the angle.**

3 **Press MENU.**

4 **Select the (OTHERS) menu by turning the SEL/PUSH EXEC dial, then press the dial.**

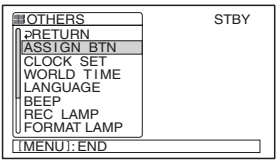

5 **Select [LANGUAGE] by turning the SEL/PUSH EXEC dial, then press the dial.**

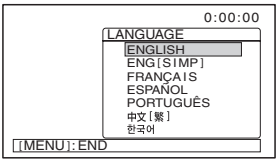

6 **Select the desired language by turning the SEL/PUSH EXEC dial, then press the dial.**

7 **Press MENU to hide the menu screen.**

Tip

- Your camcorder offers [ENG [SIMP]] (simplified English) for when you cannot find your native tongue among the options.

Attaching the supplied accessories

Attach the supplied accessories when there are required for your recording.

Attaching the shoulder brace

You can reduce the camera shake by attaching the shoulder brace.
Use the should brace as shown below.

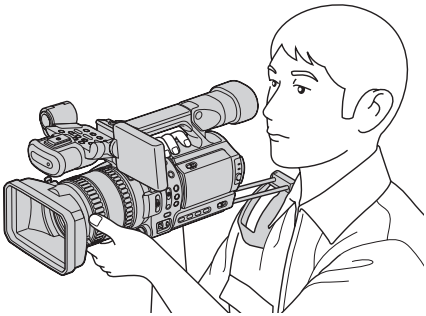

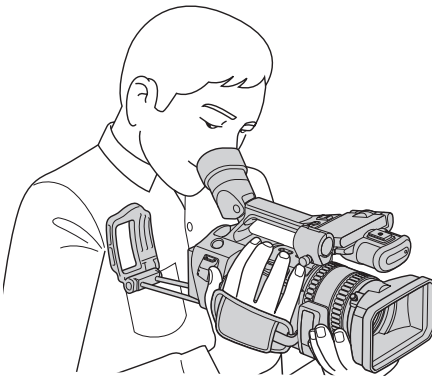

To attach the shoulder brace to the camcorder

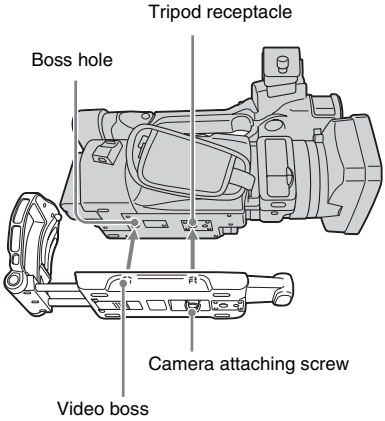

1 **Align the video boss with the boss hole on the camcorder.**
2 **Ailing the camera attaching screw with the tripod receptacle of the camcorder, and fasten the screw.**

To use the shoulder brace

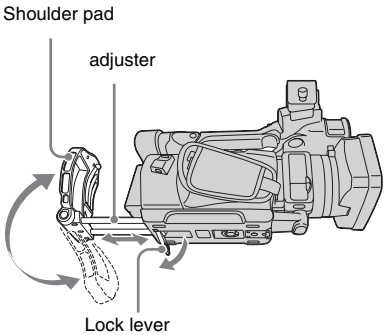

1 **Unlock the lock lever.**
2 **Pull the adjuster out, and set the shoulder pad to the desired position.**
3 **Adjust the adjuster length.**
4 **Lock the lock lever.**

When you finished using the adjuster

Replace the shoulder pad and the adjuster to the original position, and lock the lock lever.

➡*continued*

Note

- Handle the adjuster and the shoulder pad carefully to avoid injury by getting your fingers caught in them.
- Do not carry the camcorder by holding the should pad or the adjuster.
- When you store the should brace or place it on the desk, make sure that the shoulder pad and the adjuster are replaced to the original position.

Attaching the external microphone

Attach the external microphone when recording the sound coming from a distant front place. This microphone has sharp directivity.

Note

- The external microphone takes priority of the internal microphone.
- The external microphone is monaural. Use the internal microphone to record stereo sound.

To attach the external microphone to the camcorder

1 Install the battery in the microphone.
Loosen the grip, and insert a battery by matching the + and - on the battery to the + and - in the battery compartment.

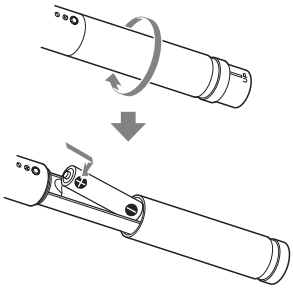

2 Loosen the microphone holder screw, and open the cover.

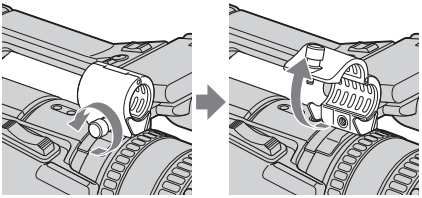

3 Place the microphone in the microphone holder, close the cover, and tighten the screw.

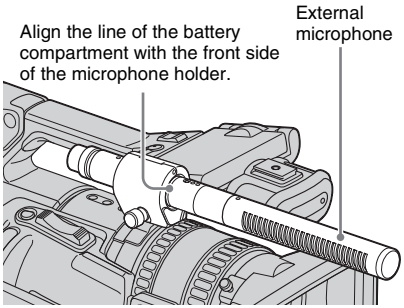

4 Connect the microphone cable to the output jack and the MIC/LINE jack of the camcorder.
Hook the microphone cable on the cable holder.

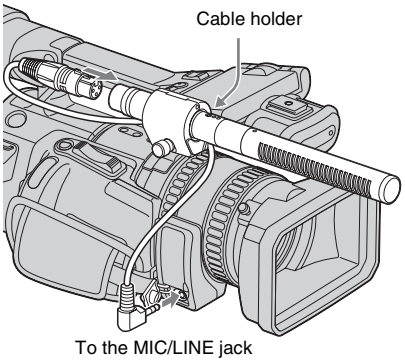

To switch the low-range frequency response according to the recording situation

Switch the low-cut switch inside the grip using a pointed object such as a pen.

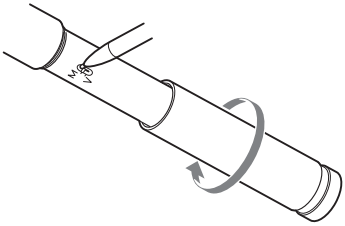

Recording situation	Switch position
To reduce wind or breathing noise To attenuate noise due to mechanical vibrations To enhance sound clarity	V
Indoor recording	M

To eliminate the effect of wind or breathing noise

Cover the microphone with the supplied wind screen.

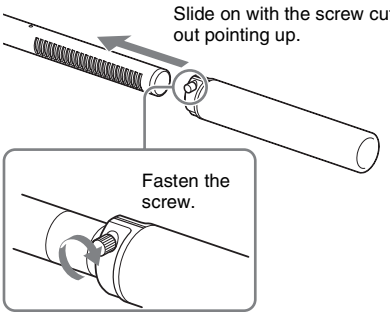

To check the remaining condition

Press BATT.

BATT lamp	Battery condition
Flashes brightly for a moment and goes out	Battery voltage is normal.
Lights up faintly or not at all	Replace the battery.

The supplied battery will last for approximately 3 000 hours.

Note

- When BATT is pressed during recording, a light clock noise will be audible. The battery check should therefore be performed before starting to record.
- If the internal battery is exhausted, the microphone may not operate properly even with an external power supply. Early replacement of the battery is therefore recommended.
- When the supplied microphone cable is used to connect an external microphone, monaural sound is recorded on both left and right channels.

Tip

- Sound may be recorded at lower volume with the supplied external microphone than with the internal microphone, thanks to the wide dynamic range of the external microphone. This is not a malfunction. To increase the volume of audio recording, adjust the microphone volume level (p. 46).

Attaching the shoulder strap

Attach the shoulder strap supplied with your camcorder to the hooks for the shoulder strap.

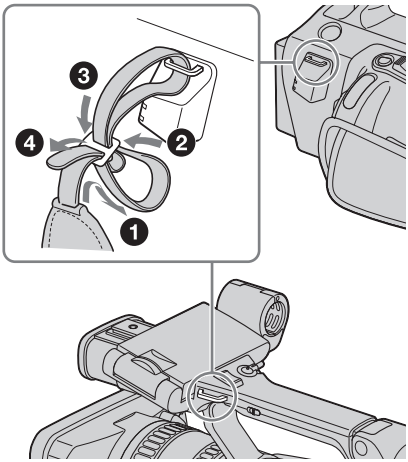

Attaching the shoe adaptor

Attach the shoe adaptor carefully not to damage the LCD panel.

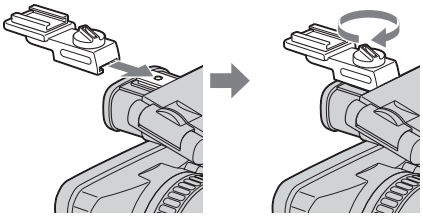

To connect an accessory, press down and push it to the end, and then tighten the screw. To remove an accessory, loosen the screw, and then press down and pull out the accessory.

Note

- If the microphone part of the attached external microphone stretches out too long, it may obstruct the light of a video light, etc. attached to the shoe adaptor.

Removing the lens hood

Loosen the lens hood fixing screw, then turn the lens hood in the direction of the arrow.

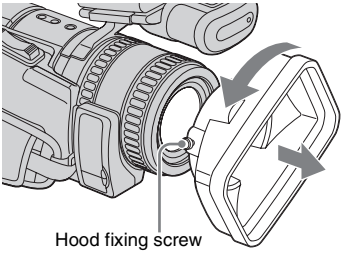

To attach the lens hood

Align the marks on the lens hood to those on the camcorder, and turn the lens hood in the opposite direction of the arrow in the figure above. Tighten the lens hood fixing screw.

Recording movies

You can record movies in either the HDV or the DV format.
Before recording, follow steps 1 to 7 in "Getting started" (p. 14 - p. 24).
Movies will be recorded along with stereo sound.

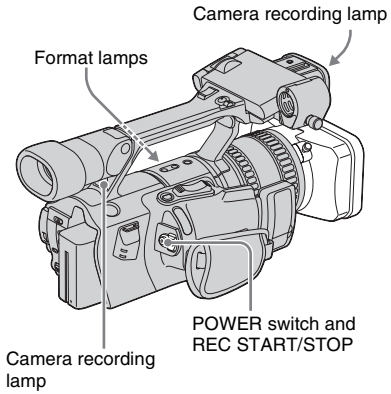

1 Open the shutter of the lens hood.

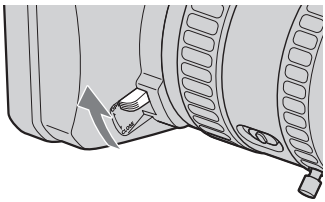

2 Open the LCD panel and adjust the angle.

3 While pressing the green button, set the POWER switch to CAMERA.

The HDV format lamp lights up and your camcorder is set to recording standby (the default setting).
It takes some time for your camcorder to be set to recording standby.

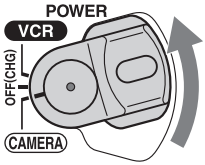

4 Select the recording format.

To record in the HDV format

Select the (IN/OUT REC) menu, [REC FORMAT], then [HDV1080i] (the default setting)(p. 70).
HDV1080i appears on the LCD screen and your camcorder is set to recording standby.

To record in the DV format

Select the (IN/OUT REC) menu, [REC FORMAT], then [DV] (p. 70).
DV appears on the LCD screen, the DV format lamp lights up, and your camcorder is set to recording standby.

5 Press REC START/STOP.

Recording starts. [REC] appears on the LCD screen and the Camera recording lamps light up.
Press REC START/STOP again to stop recording.

To turn the power off

Set the POWER switch to OFF (CHG).

To record from a low-angle

Use the REC START/STOP button on the handle after releasing the HOLD lever.
To view the picture during recording, face the LCD panel or the viewfinder upward, or face the LCD screen down, then close and restore the LCD panel to the original position with the LCD screen facing out.

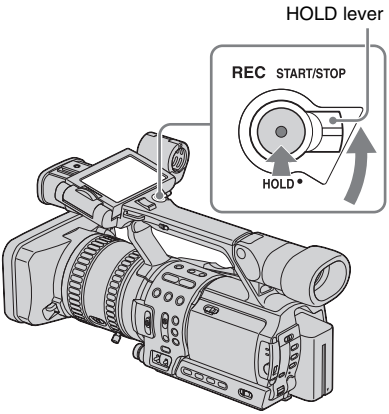

Indicators displayed during recording

The indicators will not be recorded on the tape. Date/time and the camera settings data (p. 53) will not be displayed during recording.

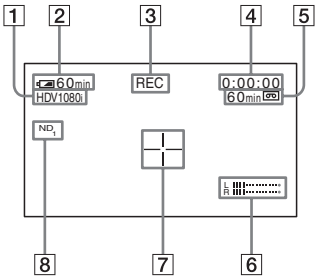

1 **Recording format (HDV1080i or DV)**
Recording mode (SP or LP) is also displayed in the DV format.

2 **Remaining battery**
The indicated time may not be correct, depending on the environment where you are using your camcorder. When you open or close the LCD panel, it takes about 1 minute to display the correct remaining battery time.

3 **Recording status ([STBY] (standby) or [REC] (recording))**

4 **Time code or tape counter (hour: minute: second)**
The time code of this camcorder utilizes the drop-frame system.

5 **Recording capacity of the tape (p. 76)**

6 **Microphone volume level (p. 46)**

7 **Center marker (p. 65)**
The center marker appears at the center of the screen when [CENTER MARKR] on the (CAMERA SET) menu is set to [ON]. It helps composing pictures on the screen.

8 **ND filter**
If [ND1] or [ND2] flashes on the screen, activate the ND filter (p. 39).

Note

- Before changing the battery pack, set the POWER switch to OFF (CHG).
- When the camcorder is left in recording standby for more than about 3 minutes, your camcorder exits the recording standby mode (the drum stops rotating) to prevent tape wear and battery loss. Since the power does not turn off, you can restart recording by pressing REC START/STOP again. It takes some time to restart recording, but this not a malfunction.

Tip

- You can record the color bars on a tape. If you record movies including the color bars, you can adjust the color while observing the color bars when you are viewing the pictures on a TV or monitor. To display the color bars, press BARS. Press BARS again to hide the color bars.
- To ensure smooth transition on a tape from the last recorded scene to the next, note the following.
  – Do not remove the cassette. (The picture will be recorded continuously without a break even when you turn the power off).
  – Do not record pictures in the HDV format and the DV format on the same tape.
  – Do not record pictures in SP mode and LP mode on the same tape. DV
  – Avoid stopping then recording a movie in the LP mode. DV
- The recording time, date, and the camera settings data are recorded automatically on the tape without being displayed on the screen. You can view this information during playback by pressing DATA CODE (p. 53).

- Following functions may not work correctly with the tape recorded in the HDV format and the DV format mixed:
  – Zero set memory
  – Date search
  – Index search
- When the connected external microphone is monaural, sound is recorded only in L (left) channel, and the audio level meter indicates only L (left) channel (p. 66).
- When a monaural external microphone is used for recording, the sound is recorded only in the left channel. The audio level meter shows only the left channel (p. 46).

Recording for a longer time DV

On the (IN/OUT REC) menu, select [REC MODE], then [LP] (p. 70).
In the LP mode, you can record 1.5 times longer than you can when recording in the SP mode.
A tape recorded in the LP mode should be played back only on this camcorder.

Using zoom

Zoom levers are mounted on the camera itself and on the handle.
Occasional use of the zoom is effective, but use it sparingly for the best results.

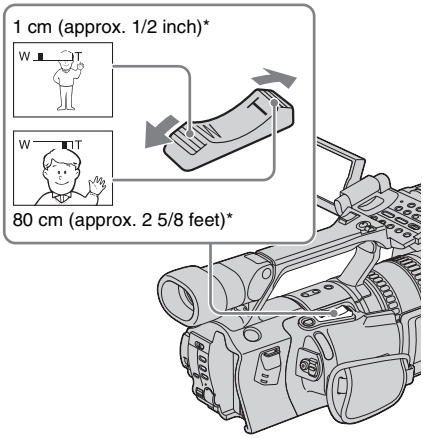

* The minimum distance required between your camcorder and the subject to get a sharp focus with that side of the lever.

1 **Set the ZOOM switch to LEVER/ REMOTE.**

2 **Press the power zoom lever slightly for a slower zoom. Press it further for a faster zoom.**

To record a wider range of view
Press the W side of the power zoom lever. The subject appears farther away (Wide angle).

To record a closer view
Press the T side of the power zoom lever. The subject appears closer (Telephoto).

Using the handle zoom

You can adjust the zoom speed with the handle zoom switch when using the handle zoom lever.

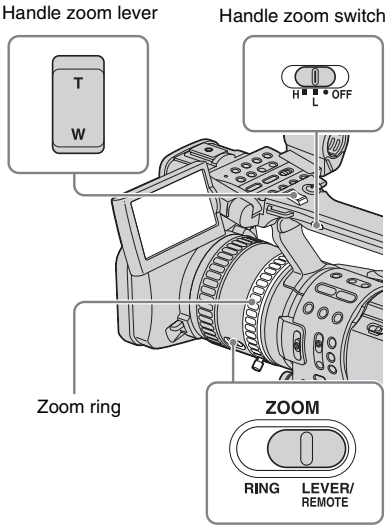

1 Set the ZOOM switch to LEVER/ REMOTE.

2 Set the handle zoom switch to H (high) or L (low).

You can set the zoom speed of H or L of the handle zoom lever in [HANDLE ZOOM] on the (CAMERA SET) menu. In the default setting, [H] is set to 6, and [L] is set to 3 (p. 64).

3 Press the handle zoom lever to zoom in or out.

Note

- You cannot adjust the zoom speed by pressing the handle zoom lever. Change the zoom speed by setting [HANDLE ZOOM] (p. 64).
- You cannot use the handle zoom lever when the handle zoom switch is set to OFF.
- You cannot change the zoom speed of the power zoom lever on the camera itself by switching the handle zoom switch.

Using the zoom ring

You can zoom at the desired speed. Fine adjustment is also possible.

1 Set the ZOOM switch to RING.

2 Rotate the zoom ring to zoom.

Note

- Rotate the zoom ring at an appropriate speed. Zooming may not be able to catch up the rotating speed of the ring if it is rotated too fast.
- When you zoom using the Remote Commander, set the ZOOM switch to LEVER/REMOTE.
- Zoomed position and picture angle change when the ZOOM switch is switched from LEVER/REMOTE to RING.
- If you rotate the zoom ring fast, motor noise will become louder as the zoom motor rotates at high speeds. If the motor noise is so loud that can be recorded, use the zoom lever or the Remote Commander.

Recording in mirror mode

You can turn the LCD panel towards the subject so that you and your subject can share the image being recorded. You can also utilize this function when recording yourself, or to keep the attention of small children attracted to the camcorder while you record them.

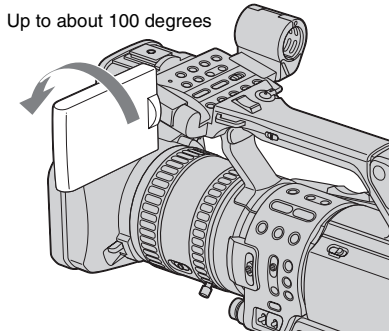

Open the LCD panel 180 degrees, then rotate it towards the subject until it clicks.

A mirror-image of the subject appears on the LCD screen, but the picture will be normal when recorded.

Displaying the recording setup information – Status check

You can check the setup value of the following items in the standby mode or during recording.

- Audio setup such as microphone volume level (p. 46)
- Output setup ([COMPONENT], [i.LINK CONV], and [TV TYPE] settings) (p. 72)
- Functions assigned to the ASSIGN buttons (p. 80)
- Picture profile setup (p. 43)

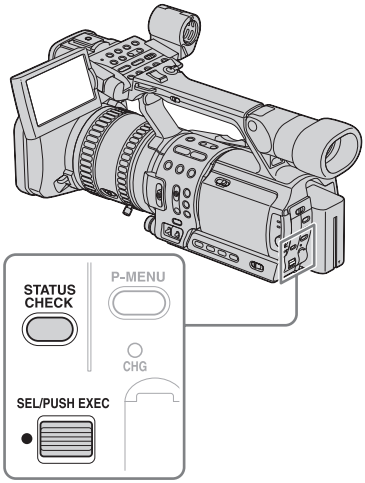

1 **Press STATUS CHECK.**

2 **Turn the SEL/PUSH EXEC dial to display the desired item.**

Each time you turn the dial, the items appear in the following order:
AUDIO → OUTPUT → ASSIGN → PICT. PROFILE

To turn off the display of the recording setup information

Press STATUS CHECK.

Note

- Information of the picture profile setup does not appear when it is set to [OFF].

Adjusting the exposure

The exposure is adjusted automatically in the default setting.
If you want to record brighter or darker pictures than those of the auto exposure adjustment, use the manual adjustment function (p. 36), or customize the picture quality by using the PICTURE PROFILE function (p. 43).

Adjusting the exposure for backlit subjects

When your subject has its back to the sun or other light, you can adjust the exposure to prevent the subject from becoming shadowed.

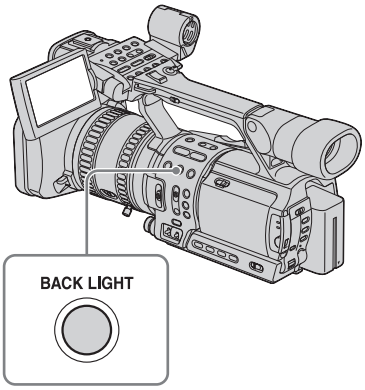

Press BACK LIGHT during recording or in the standby mode.

appears.
To cancel the back light function, press BACK LIGHT again.

Note

- The back light function is canceled when you press SPOT LIGHT.
- You cannot use the back light function if 2 or more items out of iris, gain, and shutter speed are adjusted manually.

Recording the subject lit by strong light – SPOT LIGHT

When the subject is lit by strong light, such as in a theater, use the spot light function to prevent people's faces from appearing excessively white.

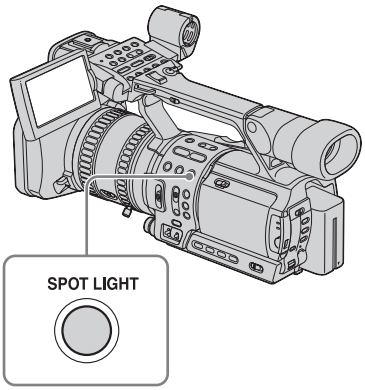

During recording or in the standby mode, press SPOT LIGHT.

appears.
To cancel the spot light function, press SPOT LIGHT again.

Note

- The spot light function is canceled when you press BACK LIGHT.
- You cannot use the spot light function if 2 or more items out of iris, gain, and shutter speed are adjusted manually.

Adjusting the white balance

You can adjust the white balance according to the light of the recording environment. The white balance adjustment data for 2 different recording conditions can be set up and memorized separately in memory A and B. During recording, you can recall the setup data from the memory with the WHT BAL (white balance) switch. The setup data will be retained for about 3 months as long as it is not readjusted even if the power is disconnected.

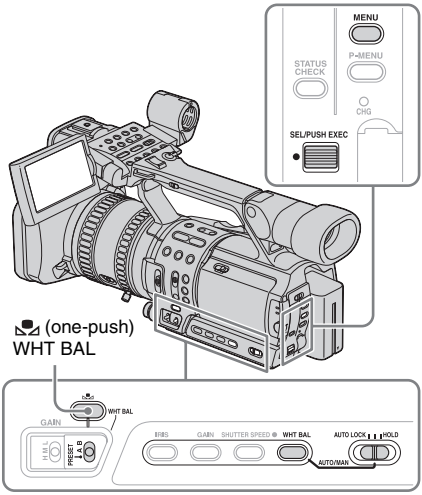

1 **During recording or in the standby mode, set the AUTO LOCK switch to the center position to release the auto lock mode.**

2 **Press WHT BAL.**

3 **Set the WHT BAL switch to A or B.**

4 **Shoot a white subject such as a piece of paper filling the entire screen under the same lighting condition as that of the subject.**

5 **Press (one-push) WHT BAL.**
A or B flashes quickly.
When the white balance is adjusted, A or B lights up and the adjustment data is memorized.

To recall adjustment data from the memory

1 **During recording or in the standby mode, set the AUTO LOCK switch to the center position to release the auto lock mode.**

2 **Set the WHT BAL switch to A or B.**

3 **Press WHT BAL.**
The white balance is set to the recalled adjustment.

Note

- Avoid subjecting your camcorder to mechanical shock while A or B is flashing.
- If A or B does not change from flashing to lit steadily, your camcorder is unable to set up the white balance. In this case, use the preset or automatic white balance.

To use the preset white balance

Your camcorder has 2 sets of preset white balance values to be selected according to the light of the recording scene.

1 **During recording or in the standby mode, set the AUTO LOCK switch to the center position to release the auto lock mode.**

2 **Press MENU.**

3 **Select the (CAMERA SET) menu by turning the SEL/PUSH EXEC dial, then press the dial.**

4 **Select [WB PRESET] by turning the SEL/PUSH EXEC dial, then press the dial.**

5 **Select the desired item by turning the SEL/PUSH EXEC dial, then press the dial.**

➡*continued*

Item	Recording scene
[OUTDOOR] (☀)	• general night views, neon signs, or fireworks • sunset, sunrise • under daylight fluorescent lamps
[INDOOR] ( )	• at party or in studios where lighting conditions change quickly • under video lamps such as those in a studio, under sodium lamps, mercury lamps, or warm white fluorescent lamps

6 Press MENU to hide the menu screen.

7 Set the WHT BAL switch to PRESET.

8 Press WHT BAL.

The white balance is set to the selected setting.

To restore the automatic white balance

Press WHT BAL, or set the AUTO LOCK switch to AUTO LOCK.

Note

- If you set the AUTO LOCK switch to AUTO LOCK, other manually adjusted items (iris, gain, shutter speed) also become temporarily automatic.

Recording using manual adjustments

You can manually adjust the iris, gain, etc. according to the brightness of the recording scene or in order to obtain desired effects. Adjust the iris, gain, shutter speed, and white balance after setting the AUTO LOCK switch to the center position to release the auto lock mode.
Depending on the position of the AUTO LOCK switch, you can hold or release the settings of these functions.

Position	Purpose
AUTO LOCK	To adjust automatically.
Center (to release the auto lock mode)	To adjust manually.
HOLD	Select this position after adjusting the settings manually to retain them.

See page 35 for details on how to adjust the white balance.

Note

- If you want to set the exposure intentionally to other than a proper level, adjust the iris, gain, and shutter speed manually.
- If you adjust only one of either iris, shutter speed, or gain manually, you can record with iris priority, shutter speed priority, or gain priority, respectively.

Tip

- To adjust the brightness of pictures, set all of the iris, gain, and shutter speed to the manual adjustment mode, then rotate the iris dial.

Adjusting the iris

You can manually adjust the light volume entering the lens.
As the iris is opened (smaller aperture values), the light volume increases. The range of focus narrows and only the subject appears in sharp focus.
As the iris is closed (larger aperture values), the light volume decreases and the range of focus widens.

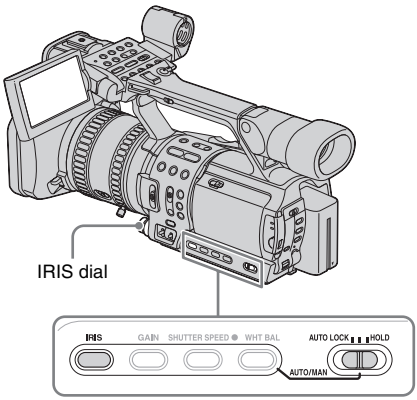

1 **During recording or in the standby mode, set the AUTO LOCK switch to the center position to release the auto lock mode.**

2 **Press IRIS.**
The current aperture value (F) appears.

3 **Rotate the IRIS dial to a desired aperture value.**
The aperture value (F) varies from F1.6 to F11, and Close, and the corresponding value appears.

To restore automatic adjustment

Press IRIS, or set the AUTO LOCK switch to AUTO LOCK.

Note

- If you set the AUTO LOCK switch to AUTO LOCK, other manually adjusted items (gain, shutter speed, white balance) also become temporarily automatic.
- As you shift the zoom from W (wide) to T (telephoto), the aperture value varies from F1.6 to F2.8.

Tip

- You can select the rotation direction of the iris dial with [IRIS DIAL] on the (OTHERS) menu (p. 75).
- The iris has an important effect on the "depth of field," that is, the focused range. An open iris makes the depth of field shallower (shorter focused range), and a closed iris makes the depth of field deeper (longer focused range). Use the iris effectively according to your purpose of recording.

Adjusting the gain

Adjust the gain manually when shooting blackish or dark objects if you do not want the AGC (auto gain control) to be activated.

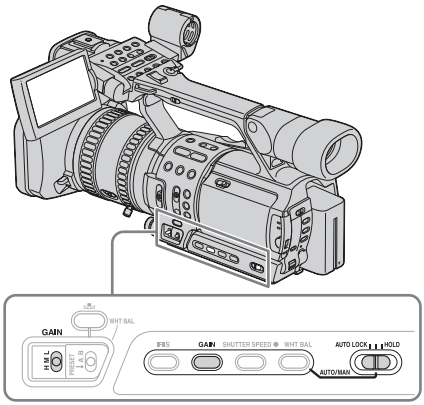

➡continued

1 **During recording or in the standby mode, set the AUTO LOCK switch to the center position to release the auto lock mode.**

2 **Press GAIN.**

The current gain value appears.

3 **Set the GAIN switch to the desired position.**

3 gain levels (H, M, L) are available.
You can set the value for the respective positions with [GAIN SETUP] on the (CAMERA SET) menu (p. 62).
The default settings for each position are 18 dB (H), 9 dB (M) and 0 dB (L).
The larger the number, the greater the gain.

To restore automatic adjustment

Press GAIN, or set the AUTO LOCK switch to AUTO LOCK.

Note

- If you set the AUTO LOCK switch to AUTO LOCK, other manually adjusted items (iris, shutter speed, white balance) also become temporarily automatic.

Adjusting the shutter speed

You can manually adjust and fix the shutter speed for your convenience. Depending on the shutter speed, you can make the subject look still, or on the contrary, emphasize the fluidity of movement.

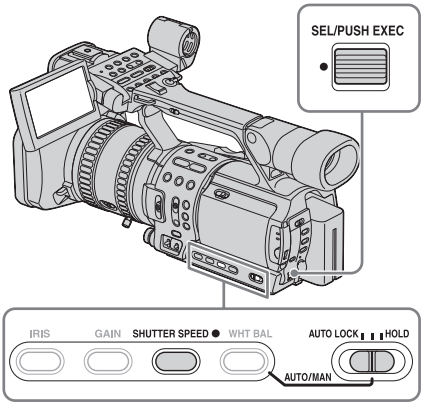

1 **During recording or in the standby mode, set the AUTO LOCK switch to the center position to release the auto lock mode.**

2 **Press SHUTTER SPEED.**

3 **Adjust the shutter speed by turning the SEL/PUSH EXEC dial.**

You can select a shutter speed between 1/4 second and 1/10000 second.
The selected shutter speed appears on the screen. For example, if you select 1/100 second, [100] appears. The larger the number that appears on the screen, the faster the shutter speed. The smaller the number that appears on the screen, the slower the shutter speed.

To restore automatic adjustment

Press SHUTTER SPEED, or set the AUTO LOCK switch to AUTO LOCK.

Note

- If you set the AUTO LOCK switch to AUTO LOCK, other manually adjusted items (iris, gain, white balance) also become temporarily automatic.

Tip

- It is difficult to focus automatically at a lower shutter speed. Manual focusing with your camcorder attached to a tripod is recommended.
- The picture may flicker or change colors under fluorescent lamps, sodium lamps, or mercury lamps.

Adjusting the volume of light – ND FILTER

You can record the subject clearly by using the ND filter when the recording environment is too bright.
There are 2 levels of ND filter setting. ND filter 1 reduces the volume of light to about 1/6, and ND filter 2 to about 1/32.

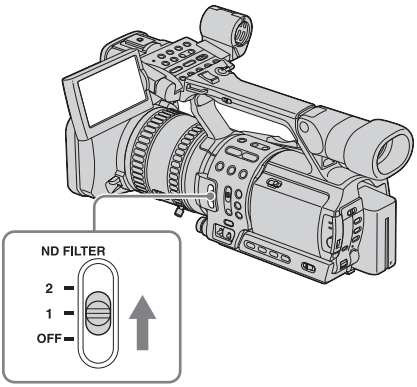

If [ND1] or [ND2] flashes in the standby mode, set the ND FILTER switch to the respective position.

If [ND1] flashes

Set the ND FILTER switch to 1 to turn on [ND1].

If [ND2] flashes

Set the ND FILTER switch to 2 to turn on [ND2].

If [ND OFF] flashes

Set the ND FILTER switch to OFF to turn off the indicator.

Note

- If you move the ND FILTER switch during recording, the picture and sound may be distorted.
- If you adjust the iris manually, no ND filter indicator will appear even if the ND filter should be activated.

Tip

- If you close the iris extensively when recording a bright subject, diffraction may occur, resulting in a fuzzy focus. (This is a common phenomenon with video cameras.) The ND filter suppresses this phenomenon and gives better recording results.

Displaying the zebra pattern to adjust the brightness

If there is a part of the screen where brightness is over a certain level, the part may appear excessively white when played back. By displaying the zebra pattern on such a part, you can be reminded to adjust the brightness before recording.
Select the brightness level to display the zebra pattern in the menu setting.

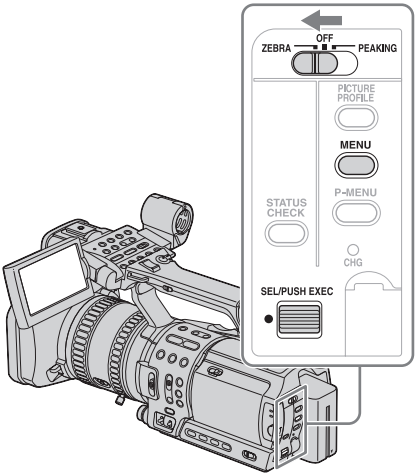

1 **During recording or in the standby mode, press MENU.**

2 **Select the (CAMERA SET) menu by turning the SEL/PUSH EXEC dial, then press the dial.**

3 **Select [ZEBRA LEVEL] by turning the SEL/PUSH EXEC dial, then press the dial.**

4 **Select the desired level by turning the SEL/PUSH EXEC dial, then press the dial.**

Select a value from [70] to [100] or [100+].
If you select [70], the zebra pattern appears at the part of 70±5 % of the brilliance signal.
If you select [100+], the zebra pattern appears at all areas of the brilliance signal over 100 %.
The default setting is [100+].

5 **Press MENU to hide the menu screen.**

6 **Set the ZEBRA/PEAKING switch to ZEBRA.**

The zebra pattern will appear.

To hide the zebra pattern

Set the ZEBRA/PEAKING switch to OFF.

Note

- The zebra pattern is not recorded on the tape.
- You cannot use the zebra pattern when the peaking function is activated (p. 42).

Adjusting the focus

The focus is adjusted automatically in the default setting.

Adjusting the focus manually

You can adjust the focus manually according to the recording conditions.
Use this function in the following cases.
– To record a subject behind a window covered with raindrops.
– To record horizontal stripes.
– To record a subject with little contrast between the subject and its background.
– When you want to focus on a subject in the background.

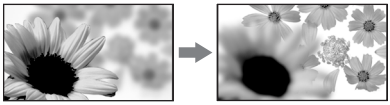

– To record a stationary subject using a tripod.

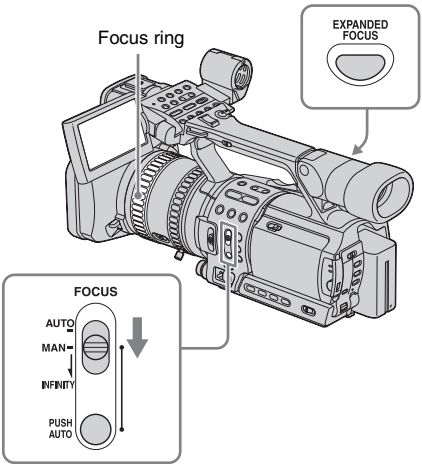

1 During recording or in the standby mode, set the FOCUS switch to MAN (manual).

appears.

2 Rotate the focus ring and adjust the focus.

changes to when the focus cannot be adjusted any farther. changes to when the focus cannot be adjusted any closer.

Tips for focusing manually

- It is easier to focus on the subject when you use the zoom function. Move the power zoom lever towards T (telephoto) to adjust the focus, and then, towards W (wide angle) to adjust the zoom for recording.
- When you want to record a close-up image of a subject, move the power zoom lever towards W (wide angle) to fully magnify the image, then adjust the focus.

To focus on a distant subject

Record the subject with the FOCUS switch slid down to INFINITY.
appears.
If you release the switch, it returns to automatic focusing.
Use this function to record a distant subject when a close subject is focused using automatic focusing.

To use the expanded focus

Press EXPANDED FOCUS.
[EXPANDED FOCUS] appears and the center of the screen is magnified by about 2 times. It will be easier to confirm the focus setting during manual focusing. The screen returns to the original size after about 5 seconds.
As long as the focus ring is rotated, the image remains magnified. The image returns to the original size in about 2 seconds after you release the ring, or when you press REC START/STOP.

To adjust the focus automatically

Set the FOCUS switch to AUTO.

To focus automatically temporarily

Record the subject with PUSH AUTO pressed. If you release the button, the setting returns to manual focusing.
Use this function to shift the focus from one subject to another. The scenes will transition smoothly.

Tip

- The focal distance information (for when it is dark and hard to adjust the focus) appears for about 3 seconds in the following cases. (It will not be displayed correctly if you are using a conversion lens (optional).)
  – When the focus mode is switched from automatic to manual.
  – When you rotate the focus ring.
- When [AF ASSIST] on the (CAMERA) menu is set to [ON], you can focus manually by rotating the focus ring during auto focusing (p. 61).

Enhancing the outline to focus – PEAKING

You can enhance the outline of the image on the screen for easier focusing.

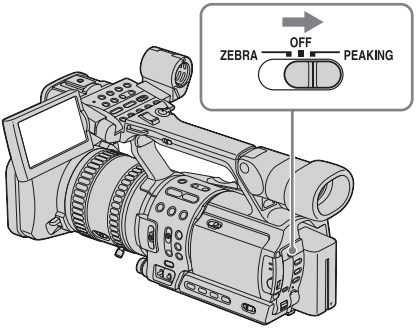

During recording or in standby mode, set the ZEBRA/PEAKING switch to PEAKING.

To cancel peaking

Set the ZEBRA/PEAKING switch to OFF.

Note

- The peaking is not recorded on the tape.
- You cannot use the peaking function when the zebra pattern is activated (p. 40).

Tip

- For easier focusing, use peaking together with the expanded focus.

Customizing the picture quality or sound

Customizing the picture quality – PICTURE PROFILE

You can customize the picture quality by adjusting the color intensity, brightness, white balance, etc. You can set 6 different picture quality settings depending on the recording time of day, the weather, or the camera person, and store them in the memory.
Connect your camcorder to a TV or monitor, and adjust the picture quality while observing the picture on the TV or monitor screen.
At the default setting, [PP1] through [PP6] are registered with picture quality settings for the following recording conditions.

Picture profile number	Recording condition
PP1	Appropriate setting to record in the HDV format
PP2	Appropriate setting to record in the DV format
PP3	Appropriate setting to record people
PP4	Appropriate setting to record film-like pictures
PP5	Appropriate setting to record sunset
PP6	Appropriate setting to record in black and white

You can change the above default settings at your convenience.

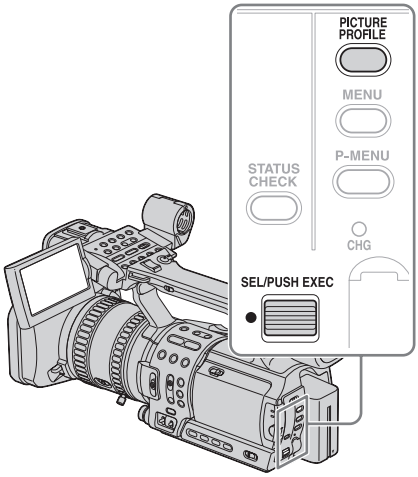

1 **In the standby mode, press PICTURE PROFILE.**

2 **Select a picture profile number by turning the SEL/PUSH EXEC dial, then press the dial.**
[PP1] through [PP6] are available.

3 **Select [SETTING] by turning the SEL/PUSH EXEC dial, then press the dial.**

4 **Select an item to be adjusted by turning the SEL/PUSH EXEC dial, then press the dial.**

5 **Adjust the picture quality by turning the SEL/PUSH EXEC dial, then press the dial.**

Item	Adjustment
[COLOR LEVEL]	–7 (low) to +7 (high) –8: black and white
[COLOR PHASE]	–7 (greenish) to +7 (reddish)
[SHARP-NESS]	0 (softer) to 15 (clearer)

➡*continued*

Item	Adjustment
[SKINTONE DTL]	To make wrinkles less noticeable by suppressing the outlines on the part of skin color to be enhanced. [TYPE1] (the color range recognized as a skin color is narrow) to [TYPE3] (the color range recognized as a skin color is wide) In the case of [TYPE3], the effect may also be applied to a color that is not a skin color. [OFF]: no adjustment
[AE SHIFT]	–7 (darker) to +7 (lighter)
[AGC LIMIT]	Select the upper limit for the Auto Gain Control (AGC) ([OFF], 12dB, 6dB, 0dB). [OFF] is 18dB.
[AT IRIS LMT]	Select the highest aperture value for the automatic adjustment (F11, F6.8, F4).
[WB SHIFT]	–7 (to make white parts bluish) to +7 (to make white parts reddish)
[AWB SENS]	To set the auto white balance operation under a reddish light source such as an incandescent lamp or candle, or under a blueish light source such as in outdoor shade. [HIGH] (reddishness or blueishness is reduced) to [LOW] (reddishness or blueishness is increased) [AWB SENS] is not effective under a clear sky or the sun.

Item	Adjustment
[CINEMA-TONE γ]	[OFF]: Normal recording [TYPE1]: A better tone scale than the standard video gamma reproduces natural intermediate colors between a skin color and neutral colors. A skin color will look lively when recorded with this setting. Further, the reproduction of extremely precise description of highlighted parts provides depth in pictures. [TYPE2]: In addition to the features of [TYPE1], this setting is capable of extremely precise description of the entire exposure zone from shadowed parts to highlighted parts, which enables reproduction of a deeper black.
[CINE-FRAME]	[CINEFRAME 30]: Pictures are recorded with a cinema-like atmosphere. This produces the feel of smoothness better than [CINEFRAME 24]. [CINEFRAME 24]: Pictures are recorded with the atmosphere of 24 frames per second adopted by film recording. [OFF]: normal recording
[COPY]	To copy a picture profile setting to other picture profiles.
[RESET]	To restore the default setting of the picture profile.

6 **Repeat steps 4 and 5 to adjust other items.**

7 **Select [⮐ RETURN] by turning the SEL/PUSH EXEC dial, then press the dial.**

8 Select [OK] by turning the SEL/PUSH EXEC dial, then press the dial.

A picture profile indicator appears.

To cancel the picture profile recording

Select [OFF] in step 2, then press the SEL/PUSH EXEC dial.

To check the picture profile settings

During recording or in the standby mode, press STATUS CHECK (p. 33).

To copy the picture profile setting to other picture profiles

1. **Press PICTURE PROFILE.**
2. **Select the number of the picture profile to be copied from by turning the SEL/PUSH EXEC dial, then press the dial.**
3. **Select [SETTING] by turning the SEL/PUSH EXEC dial, then press the dial.**
4. **Select [COPY] by turning the SEL/PUSH EXEC dial, then press the dial.**
5. **Select the number of the picture profile to be copied to by turning the SEL/PUSH EXEC dial, then press the dial.**
6. **Select [YES] again by turning the SEL/PUSH EXEC dial, then press the dial.**
   If you decide not to copy the settings, select [NO].
7. **Press PICTURE PROFILE.**

To reset the picture profile settings

You can reset the picture profile settings by picture profile number. You cannot reset all picture profile settings at once.

1. **Press PICTURE PROFILE.**
2. **Select the number of the picture profile to be reset by turning the SEL/PUSH EXEC dial, then press the dial.**
3. **Select [SETTING] by turning the SEL/PUSH EXEC dial, then press the dial.**
4. **Select [RESET] by turning the SEL/PUSH EXEC dial, then press the dial.**
5. **Select [YES] by turning the SEL/PUSH EXEC dial, then press the dial.**
   If you decide not to reset the picture profile, select [NO].
6. **Press PICTURE PROFILE.**

Note

- If you adjust all of the iris, shutter speed and gain manually, you cannot obtain the effect of [AE SHIFT].
- If you adjust the iris manually, you cannot obtain the effect of [AT IRIS LMT].
- If the object is so bright that the aperture value set in [AT IRIS LMT] is not appropriate, the shutter speed may reach 1/2000 automatically.
- If you adjust the gain manually, you cannot obtain the effect of [AGC LIMIT].
- If you select [CINEFRAME 24] when the shutter speed is slower than 1/30, the shutter speed is automatically set to 1/60.
- If you select [CINEFRAME 30] when the shutter speed is slower than 1/15, the shutter speed is automatically set to 1/30.

Adjusting the audio recording level – Microphone volume level

You can adjust the microphone volume when recording. Checking the volume with headphones is recommended.

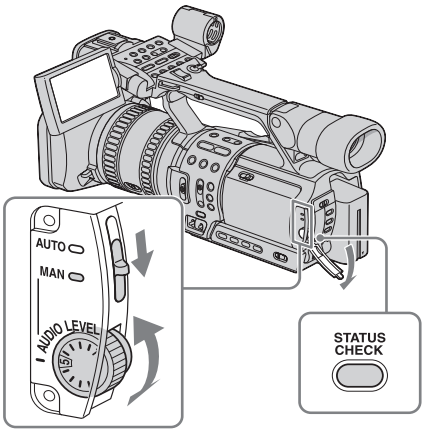

1 Open the cover and set the AUTO/MAN switch to MAN.

The audio level meter appears.

2 During recording or in the standby mode, adjust the volume by turning the AUDIO LEVEL dial.

To restore automatic adjustment

Set the AUTO/MAN switch to AUTO.

Note

- You cannot adjust the volume of audio input from the AUDIO/VIDEO jack or the i HDV/DV jack.

Tip

- To check the audio setting information in greater detail, press STATUS CHECK (p. 33). You can also check the microphone volume during automatic adjustment.

Recording a picture using various features

Developing scenes smoothly – Shot transition

You can register the settings of focus, zoom, iris, gain, shutter speed, and white balance, and then change the recording setting from the current one to the registered one, resulting in a smooth transition of scenes (Shot transition).
For example, you can shift the focus from closer objects to farther objects, or change the depth of field by adjusting the iris. In addition, you can develop scenes under different recording conditions smoothly. If you register the manual adjustment function of the white balance, the scenes will develop smoothly between objects indoor and those outdoor.
Use a tripod to avoid camera-shake.

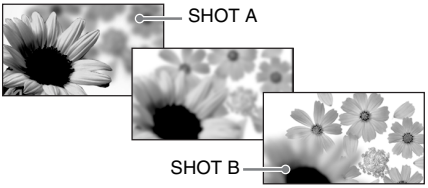

Set the transition curve and duration using [SHOT TRANS] on the (CAMERA SET) menu (p. 62). You can use a timer to start the shot transition (p. 59).

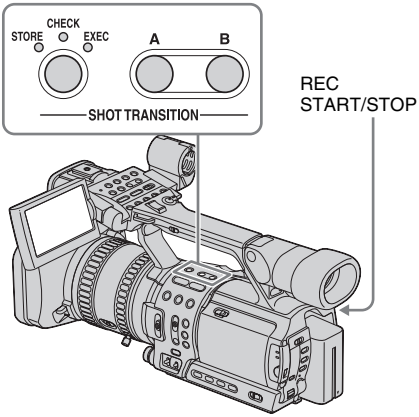

Step 1: Store the settings

1 **Press STORE/CHECK/EXEC repeatedly to turn on the STORE lamp.**

2 **Adjust the desired items manually.**
To adjust the camera setup items such as iris manually, set the AUTO LOCK switch to the center position to release the auto lock mode. See pages 35 to 38 for details on adjustment.

3 **Press a button (A or B) to select the storage location.**
The setting is stored in the selected button. The settings are called Shot A and Shot B respectively.

Note

- If you set the POWER switch to OFF (CHG), the settings stored in Shot A and B are deleted.

Step 2: Check the stored settings (Shot)

1 **Press STORE/CHECK/EXEC repeatedly to turn on the CHECK lamp.**

2 **Press the button (A or B) in which the setting was stored.**
The selected setting will take effect on the picture on the screen. The focus, zoom, and so on, are automatically adjusted as stored in the setting.

Note

- You cannot check the the transition time, curve set, and start timer using [SHOT TRANS] on the (CAMERA SET) menu.

Recording using the Shot transition function

1 **Press STORE/CHECK/EXEC repeatedly to turn on the EXEC lamp.**

2 **Press REC START/STOP.**

3 **Press the button (A or B) in which the desired setting was stored.**
Pictures will be recorded with the settings that were changed automatically from the current ones to the stored ones.

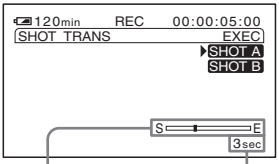

Transition bar
S: start
E: end

Count down display*

*Appears when the start timer is activated.

Note

- You cannot zoom, focus, or adjust manually while checking or activating the Shot transition.
- When you change [SHOT TRANS] on the (CAMERA SET) menu, turn off the STORE/CHECK/EXEC lamp by pressing the button.
- You cannot return from the stored Shot A or B settings to previous settings after you activate the Shot transition during recording.
- If you press the following buttons during the shot transition operation, the operation is canceled:
  – PICTURE PROFILE
  – MENU
  – P-MENU
  – EXPANDED FOCUS
  – STATUS CHECK

Tip

- You can record using both settings by making them change either from Shot A to Shot B or from Shot B to Shot A. For example, to change from Shot A to Shot B, turn on the CHECK lamp and press A followed by REC START/STOP, then turn on the EXEC lamp and press B.
- You can rehearse the shot transition by pressing the button (A or B), in which the desired setting was stored, before pressing REC START/STOP in step 2.

To cancel the operation

Press STORE/CHECK/EXEC repeatedly until the STORE/CHECK/EXEC lamps are all turned off.

Fading in and out of a scene – FADER

You can add the following effects to currently recording pictures.
Assign the FADER function to one of the ASSIGN buttons in advance. See page 80 for details on how to assign a function.

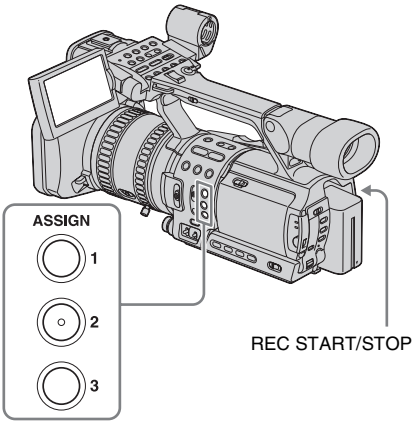

[BLACK FADER]

[WHITE FADER]

1 Press the ASSIGN button assigned to the FADER function in the standby mode (to fade in) or during recording (to fade out).

Each time you press the button, the indicator changes as follows:
[BLACK FADER] → [WHITE FADER] → no display

2 Press REC START/STOP.

The FADER indicator stops flashing and disappears when the fade is complete.

To cancel the operation

Press the ASSIGN button assigned to the FADER function repeatedly until the FADER indicators disappear.

Note

- You cannot use the FADER function together with [FRAME REC] (Frame recording). DV

Recording an index signal at the beginning of recording

If you make an index for a scene, you can easily search for the scene later (p. 59).
The index function will make it easier to check the transition of recording or edit your pictures using index signals.
Assign the index function to one of the ASSIGN buttons in advance. See page 80 to assign a function.

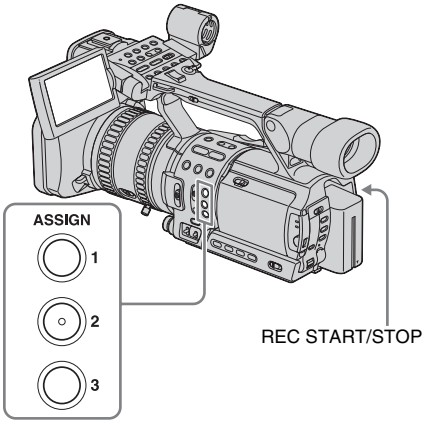

Press the ASSIGN button assigned to the index function.

When pressed during recording

appears for about 7 seconds and an index signal is recorded.

When pressed in the standby mode

flashes.
After you press REC START/STOP to start recording, appears for about 7 seconds and an index signal is recorded.

To cancel the operation

Before starting to record, press the ASSIGN button assigned to the index function again.

➡continued

Note

- You cannot record an index signal on a recorded tape afterward.

Reviewing the most recently recorded scenes – Rec Review

You can view a few seconds of the scene recorded just before you stopped the tape.

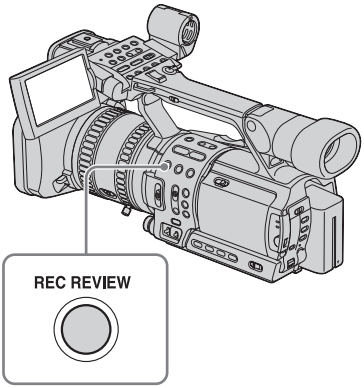

In the standby mode, press REC REVIEW.

The last few seconds of the most recently recorded scene are played back. Then, your camcorder is set to the standby mode.

Viewing movies

Make sure you have a recorded cassette inserted into your camcorder.
Some of the operations are possible using the Remote Commander.
When you want to play back recordings on your TV, see page 55.
When playing back the tape, select the ⇆ (IN/OUT REC) menu, [VCR HDV/DV], then [AUTO] (the default setting).

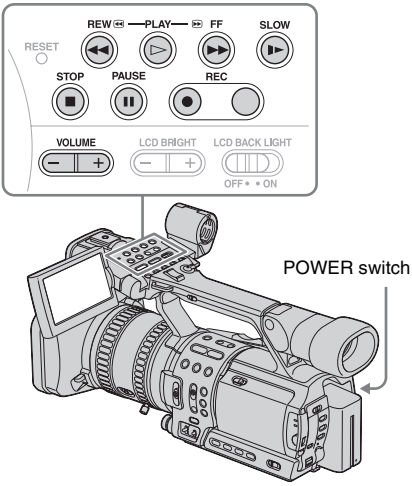

1 **Open the LCD panel and adjust the angle.**

2 **While pressing the green button, set the POWER switch to VCR.**

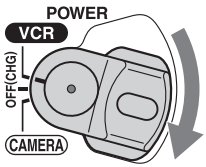

3 **Press ◄◄ (rewind) to go to the point you want to view.**

4 **Press ► (play) to start playback.**

To adjust the volume

Adjust the volume by pressing VOLUME – (decrease) / + (increase).

To stop playback

Press ■ (stop).

To pause

Press ❚❚ (pause) during playback.
Press ► (play) or ❚❚ (pause) again to restart the playback.
Playback stops automatically when the pause mode continues for more than 3 minutes.

To fast forward or rewind

Press ►► (fast forward) or ◄◄ (rewind) in stop mode.

To review movies on the viewfinder

Close the LCD panel. Then, adjust the viewfinder angle.

Indicators displayed during tape playback

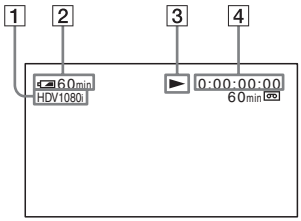

1 **Format of the playback signal (HDV1080i or DV) / Recording mode (SP or LP)**

2 **Remaining battery**

3 **Tape transport indicator**

4 **Time code (hour: minute: second: frame) or tape counter (hour: minute: second)**
The time code of this camcorder is of the drop-frame system.

➡*continued*

Note

- When playing back a tape recorded in the HDV and DV formats, and the signal switches between HDV and DV, the picture and sound disappear temporarily.
- You cannot play back the tape recorded in the HDV format on video cameras of the DV format or mini-DV players.
- Recording mode (SP or LP) appears when a tape recorded in the DV format is played back.

Tip

- To play back the tape recorded using an external monaural microphone connected, see [MULTI-SOUND] (p. 66).

Playing back in various modes

To fast forward or rewind during playback – Picture search

Keep on pressing ▶▶ (fast forward) or ◀◀ (rewind) during playback.
To resume normal playback, release the button.

To view the picture while fast forwarding or rewinding – Skip scan

Keep on pressing ▶▶ (fast forward) or ◀◀ (rewind) while fast forwarding or rewinding the tape.
To resume fast forwarding or rewinding, release the button.

To play back in various modes

You will not hear the recorded sound. Also, you may see mosaic-like images of the previously played picture remaining on the screen.

To	Press
change the playback direction*	< (reverse) on the Remote Commander during playback.
play back slowly	I► (slow) during playback. To reverse direction DV ❶ Press < (reverse) on the Remote Commander. ❷ I► (slow).
play back 2 times faster (double speed) DV	×2 (double speed) on the Remote Commander during playback. To reverse direction ❶ Press < (reverse) on the Remote Commander. ❷ ×2 (double speed) on the Remote Commander.
play back frame by frame	II► (frame) on the Remote Commander during playback pause. To reverse direction, press ◀II (frame) on the Remote Commander during playback pause. DV

To return to the normal playback mode, press ► (play).

* Horizontal lines may appear at the top, bottom, or in the center of the screen. This is not a malfunction.

Note

- Pictures in the HDV format are not output from the i HDV/DV jack when they are paused or played back in other than normal playback mode.
- Pictures in the HDV format may appear distorted during:
  – Picture search
  – Reverse playback

Various playback functions

You can locate the end of the last recording, or display the date of recording and camera settings data.

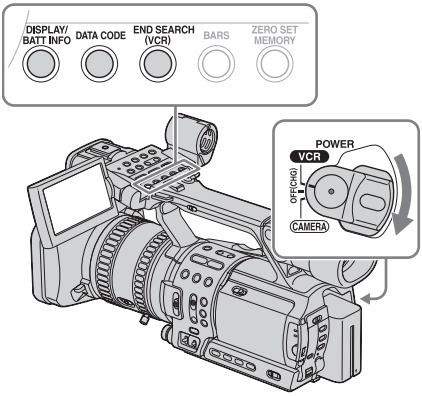

Searching for the last scene of the most recent recording – END SEARCH

This function is handy when you have played back the tape, for example, but want to start recording right after the most recently recorded scene. The END SEARCH function will not work once you eject the cassette after you have recorded on the tape.

1 Set the POWER switch to VCR.

2 Press END SEARCH (VCR).

The last scene of the most recent recording is played back for about 5 seconds.

To cancel the operation

Press END SEARCH (VCR).

Note

- The END SEARCH function will not work correctly when there is a blank section between recorded sections on the tape.

Displaying the screen indicators

You can choose to display the time code, tape counter, and other information on the screen.

Press DISPALY/BATT INFO.

The indicator switches on or off as you press the button.

Tip

- You can display the screen indicators during playback on a TV. Select the (OTHERS) menu, [DISP OUTPUT], then [V-OUT/PANEL] (p. 76). However, only playback mode indicators and tape counter appear when playing back a tape recorded in the HDV format, and [COMPONENT] on the (IN/OUT REC) menu is set to [1080i/480i].

Displaying the date/time and camera settings data – Data code

During playback, you can view the date/time data and the camera settings data that are automatically recorded while recording pictures on a tape.

1 Set the POWER switch to VCR.

2 Press DATA CODE on the camcorder or Remote Commander during playback or playback pause.

Each time you press the button, the indicators appear in turn as follows:
Date/time → Camera settings data → (no display)

Camera settings data display

In the date/time data display, the date and time is displayed in the same area.
If you record the picture without setting the clock, [--- -- ----] and [--:--:--] will appear.

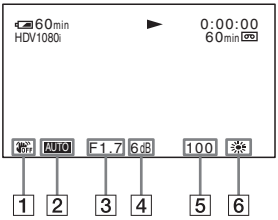

1 **SteadyShot off**

2 **Exposure**

3 **Aperture value**
If you manually adjust the aperture value to the maximum, CLOSE appears.

4 **Gain**

5 **Shutter speed**

6 **White balance**
PWB appears when pictures recorded by using the shot transition function are played back.

To hide the camera settings data

Select the (OTHERS) menu, [DATA CODE] then [DATE] (p. 75).
Each time you press DATA CODE, the date/time indicator turns on and off.

Displaying the video information – Status check

You can check the setup value of the following items.

- Audio setup such as audio mix (p. 66)
- Output signal setup ([VCR HDV/DV], etc.) (p. 69)
- Functions assigned to the ASSIGN buttons (p. 80)

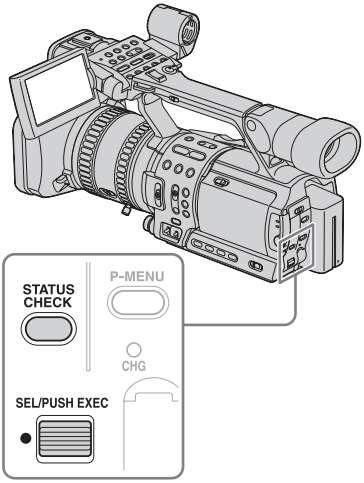

1 Press STATUS CHECK.

2 Turn the SEL/PUSH EXEC dial to display the desired item.
Each time you turn the dial, the items appear in the following order:
AUDIO → OUTPUT → ASSIGN

To turn off the video information

Press STATUS CHECK.

Playing the picture on a TV

TV connections differ depending on the type of TV.
Connect the supplied AC Adaptor/charger to the wall outlet for the power supply (p. 18).
Refer also to the instruction manuals supplied with the devices to be connected.
To copy to another tape, see page 82.

Viewing the picture on a high definition TV

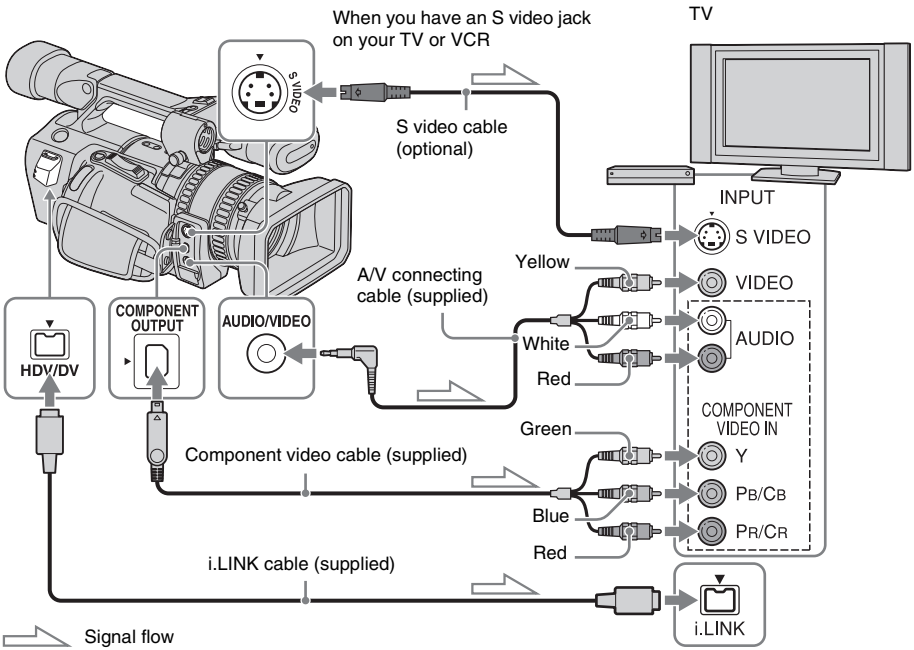

Connect your camcorder and your TV using either cables described below.

To connect the TV using the i.LINK cable

This connection is recommended when your TV is compatible with HDV/DV and has an i.LINK jack.

- Before connecting the i.LINK cable, select the ⇄ (IN/OUT REC) menu, [VCR HDV/DV], then [AUTO] (the default setting).
- In case of this connection, the TV needs to be set so that it recognizes that the camcorder is connected. Refer to the operating manual supplied with the TV for the details.

To connect the TV using the component video cable

- To view the picture recorded in the HDV format, set [COMPONENT] on the ⇄ (IN/OUT REC) menu according to your TV (p. 72). When the picture recorded in the DV

➡continued

format is played back, an equivalent signal with [480i] is output, even if [1080i/480i] is selected.
- Only video signals are output from the COMPONENT OUTPUT jack. To output audio signals, connect the white and red plugs of the A/V connecting cable to the audio input jack of your TV.

To connect the TV using the A/V connecting cable

When there is an S video jack on the device to be connected, connect it with your camcorder by the S video jacks using an S video cable (optional) instead of the yellow video plug of the A/V connecting cable (supplied). This connection produces pictures more faithfully on the TV connected. The audio will not be output when you connect with the S video cable alone.

Note

- Be sure that you set [VCR HDV/DV] before connecting the i.LINK cable. Otherwise, the TV might not be able to recognize the video signal correctly.
- Pictures in the DV format are not output from the COMPONENT OUT jack, if copyright protection signals are recorded in the pictures.

Tip

- If you connect your camcorder to your TV using more than one type of cables to output the pictures in analog signal, the output signals have priority in the following order:
  COMPONENT OUTPUT jack → S video jack → AUDIO/VIDEO jack
- See page 107 for details on i.LINK.

When your TV is connected to a VCR

Connect your camcorder to the LINE IN input on the VCR using the A/V connecting cable. Set the input selector on the VCR to LINE.

Viewing the picture on a 16:9 TV or a 4:3 TV

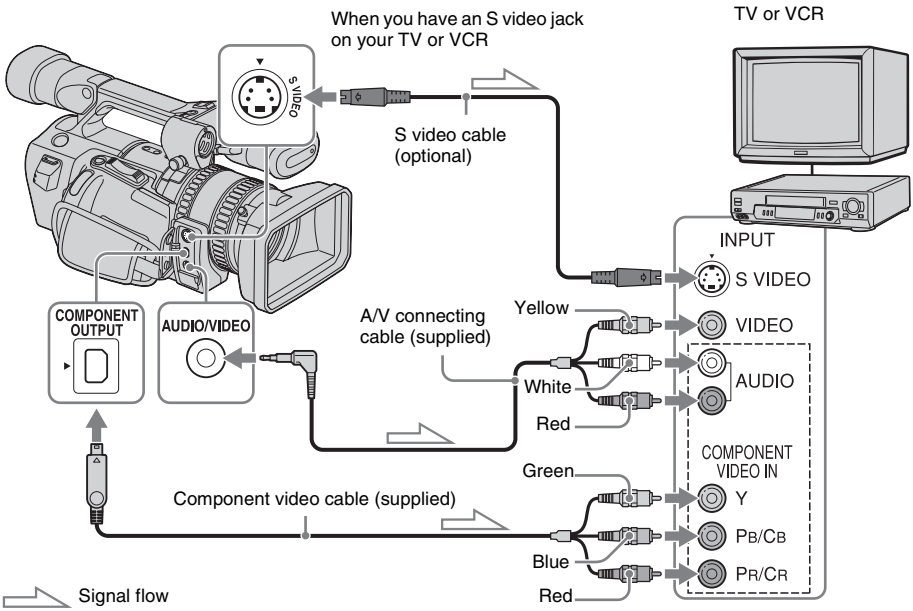

Connect your camcorder and your TV or VCR using either cables described below.

To connect the TV using the component video cable

This connection is recommended when your TV has COMPONENT VIDEO jacks.

- To view the picture recorded in the HDV format, set [COMPONENT] on the (IN/OUT REC) menu according to your TV (p. 72). When a picture recorded in the DV format is played back, an equivalent signal with [480i] is output, even if [1080i/480i] is selected.
- Only video signals are output from the COMPONENT OUTPUT jack. To output audio signals, connect the white and red plugs of the A/V connecting cable to the audio input jack of your TV or VCR.

To connect the TV using the A/V connecting cable

When there is an S video jack on the device to be connected, connect it with your camcorder by the S video jacks using an S video cable (optional) instead of the yellow video plug of the A/V connecting cable (supplied). Use an S video cable to produce high resolution pictures. The audio will not be output when you connect with the S video cable alone.

To view the picture on a 4:3 TV

- To view the picture recorded in the HDV format, select the (IN/OUT REC) menu, [TV TYPE], then [4:3] (p. 72).
- To view the picture recorded in the DV format, select the (CAMERA SET) menu, [DV WIDE REC], then [OFF] before recording (p. 50).

When your TV is connected to a VCR

Connect your camcorder to the LINE IN input on the VCR using the A/V connecting cable. Set the input selector on the VCR to LINE.

When your TV is monaural (When your TV has only one audio input jack)

Connect the yellow plug of the A/V connecting cable to the video input jack and connect the white or the red plug to the audio input jack of your TV or VCR.
When you want to play the sound in monaural mode, use a connecting cable (optional) for that purpose.

Note

- Pictures in the DV format are not output from the COMPONENT OUT jack, if copyright protection signals are recorded in the pictures.

Locating a scene on a tape for playback

Searching quickly for a desired scene – Zero set memory

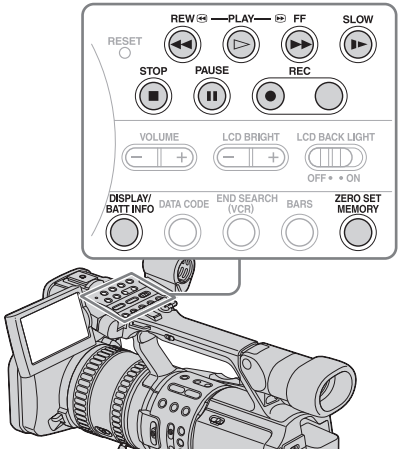

1 During playback, press ZERO SET MEMORY on your camcorder or Remote Commander at the point you want to locate later on.

The tape counter is reset to "0:00:00" and →0← appears on the screen.
If the tape counter is not displayed, press DISPALY/BATT INFO.

2 Press ■ (stop) when you want to stop playback.

3 Press ◀◀ (rewind).

The tape stops automatically when the tape counter reaches "0:00:00."

4 Press ▶ (play).

The playback starts from the point designated “0:00:00” on the tape counter.

To cancel the operation

Press ZERO SET MEMORY again.

Note

- There may be a discrepancy of several seconds between the time code and the tape counter.
- Zero set memory will not function correctly if there is a blank section between recorded sections on the tape.

Searching for a scene by date of recording – Date search

You can locate the point where the recording date changes.

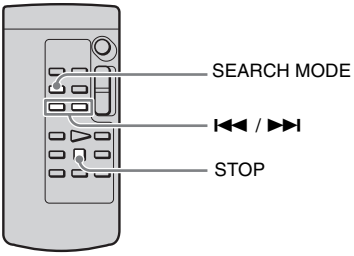

1 **Set the POWER switch to VCR.**

2 **Press SEARCH MODE on the Remote Commander repeatedly to select [DATE SEARCH].**

3 **Press ⏮ (previous)/⏭ (next) on the Remote Commander to select a recording date.**

You can select the previous or the next date of the present point on the tape.
Playback starts automatically from the point where the date changes.

To cancel the operation

Press STOP on the Remote Commander.

Note

- If 1 day’s recording is less than 2 minutes, your camcorder may not accurately find the point where the recording date changes.
- The Date search will not function correctly when there is a blank section between recorded sections on the tape.

Searching for a recording start point – Index search

You can locate the point where an index signal is recorded (p. 49).

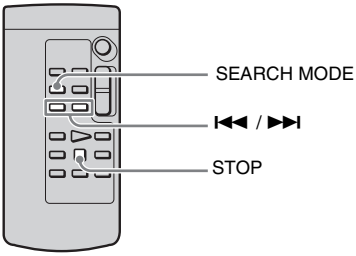

1 **Set the POWER switch to VCR.**

2 **Press SEARCH MODE on the Remote Commander repeatedly to select [INDEX SEARCH].**

3 **Press ⏮ (previous)/⏭ (next) on the Remote Commander to select an index point.**

You can select the previous or the next index signal of the present point on the tape.
Playback starts automatically from the point where the index signal is recorded.

To cancel the operation

Press STOP on the Remote Commander.

Note

- If 1 day’s recording is less than 2 minutes, your camcorder may not accurately find the index point.
- The Index search will not function correctly when there is a blank section between recorded sections on the tape.

Selecting menu items

You can change various settings or make detailed adjustments using the menu items displayed on the screen.

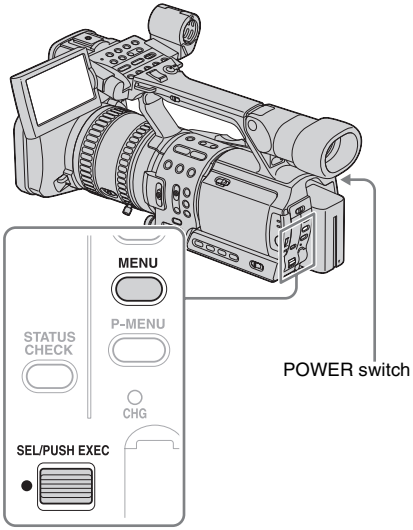

1 Turn on the power (p. 20).

2 Press MENU to display the menu index screen.

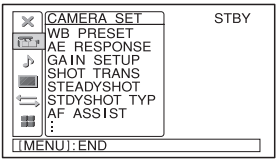

3 Select the icon of the desired menu by turning the SEL/PUSH EXEC dial, then press the dial.

CAMERA SET (p. 62)
AUDIO SET (p. 66)
LCD/VF SET (p. 68)
IN/OUT REC (p. 69)
OTHERS (p. 74)

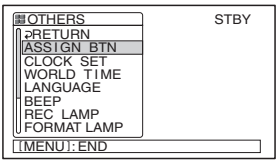

4 Select the desired item by turning the SEL/PUSH EXEC dial, then press the dial.

The available menu items vary depending on the power mode of your camcorder. Unavailable items will be grayed out.

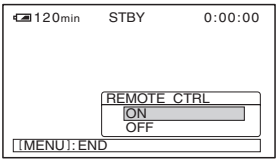

5 Select the desired setting by turning the SEL/PUSH EXEC dial, then press the dial.

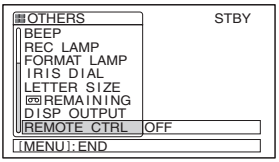

6 Press MENU to hide the menu screen.

To return to the previous screen, select [RETURN].

Menu items

You can adjust the items listed below using the menu. The item you can adjust vary depending on the power mode of your camcorder. For details on each item, see the respective pages.

CAMERA SET

- WB PRESET (p. 62)
- AE RESPONSE (p. 62)
- GAIN SETUP (p. 62)
- SHOT TRANS (p. 62)
  - TRANS TIME
  - TRANS CURVE
  - START TIMER
- STEADYSHOT (p. 63)
- STDYSHOT TYP (p. 64)
- AF ASSIST (p. 64)
- FLCKR REDUCE (p. 64)
- HANDLE ZOOM (p. 64)
- ZEBRA LEVEL (p. 65)
- CENTER MARKR (p. 65)
- FRAME REC (p. 65)

AUDIO SET

- MULTI-SOUND (p. 66)
- AUDIO MIX (p. 66)
- AUDIO MODE (p. 67)
- WIND (p. 67)
- MIC/LINE IN (p. 67)
- INT MIC SENS (p. 67)
- EXT MIC SENS (p. 67)

LCD/VF SET

- LCD COLOR (p. 68)
- LCD BL LEVEL (p. 68)
- VF B.LIGHT (p. 68)

IN/OUT REC

- VCR HDV/DV (p. 69)
- REC FORMAT (p. 70)
- REC MODE (p. 70)
- DV WIDE REC (p. 71)
- COMPONENT (p. 72)
- i.LINK CONV (p. 72)
- AV → DV OUT (p. 73)

OTHERS

- ASSIGN BTN (p. 74)
- CLOCK SET (p. 74)
- WORLD TIME (p. 74)
- LANGUAGE (p. 74)
- BEEP (p. 74)
- REC LAMP (p. 75)
- FORMAT LAMP (p. 75)
- IRIS DIAL (p. 75)
- DATA CODE (p. 75)
- LETTER SIZE (p. 75)
- REMAINING (p. 76)
- DISP OUTPUT (p. 76)
- REMOTE CTRL (p. 76)

Using the (CAMERA SET) menu

– STDYSHOT TYP/FRAME REC, etc.

You can select the items listed below on the CAMERA SET menu. For details on how to select items, see "Selecting menu items" (p. 60).
The default settings are marked with ▷. The indicators in parentheses appear when the setting is selected. The settings you can adjust vary depending on the power mode of your camcorder. The screen shows the items you can operate at the moment. Unavailable items will be grayed out.

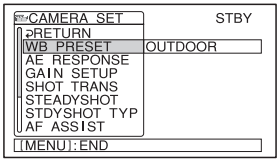

WB PRESET

Select to use the preset white balance. See page 35 for details.

AE RESPONSE

Select the speed to adjust the exposure automatically, in accordance with the brightness of the subject. [FAST], [MIDDLE], and [SLOW] are available.

GAIN SETUP

Select the adjustment value for each position (H, M, and L) of the GAIN switch (p. 37).

1. **Select [H], [M], or [L] by turning the SEL/PUSH EXEC dial, then press the dial.**
2. **Select an adjustment value by turning the SEL/PUSH EXEC dial, then press the dial.**
   0dB, 3dB, 6dB, 9dB, 12dB, 15dB, and 18dB are available. The larger the number, the greater the gain.
3. **Select [OK] by turning the SEL/PUSH EXEC dial, then press the dial.**
4. **Press MENU to hide the menu screen.**

SHOT TRANS

Select this setting to set the transition curve, duration time, and start timer. See page 40 for details on using the shot transition function.

Note

- Before setting [SHOT TRANS], turn off all of the STORE/CHECK/EXEC lamps by pressing the button repeatedly (p. 40).

TRANS TIME

Select the time that takes to make a transition from the current setting to the selected setting.
Duration from [2.0 sec] through [15.0 sec] are available. It is set to [4.0 sec] in the default setting.

TRANS CURVE

Select the transition curve.
The figures below show the transition curve of each mode.
*1: parameter level
*2: transition of time

LINEAR	Select to make the transition linear.	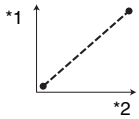
▷SOFT STOP	Select to make the transition slow at the end.	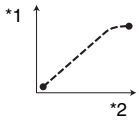
SOFT TRANS	Select to make the transition slow at the beginning and end, and linear in midway.	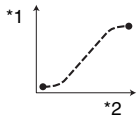

START TIMER

▷OFF	Select to start the shot transition immediately.
5 sec	Select to start the shot transition after 5 seconds.
10 sec	Select to start the shot transition after 10 seconds.
20 sec	Select to start the shot transition after 20 seconds.

STEADYSHOT

▷ON	Select to activate the SteadyShot function. You can select the type of the SteadyShot function in [STDYSHOT TYP].
OFF ( )	Select to deactivate the SteadyShot function. Select when recording using a tripod. More natural pictures are produced. You can also deactivate the SteadyShot function by using the ASSIGN button assigned to the SteadyShot function (p. 80).

➡*continued*

Note

- The SteadyShot function does not work well when a wide conversion lens other than VCL-HG0872 (optional) is attached to your camcorder.
- When using VCL-HG0872, select [WIDE CONV.] in [STDYSHOT TYP] below.

STDYSHOT TYP

You can select the type of the SteadyShot function that compensates for camera-shake. To release the SteadyShot function, select [OFF] in [STEADYSHOT] or use the ASSIGN button assigned to the SteadyShot function (p. 80).

HARD	Select to activate the SteadyShot function with stronger effect. This mode is not recommended for recording with camera panning technique.
▷STANDARD	Select to activate the standard SteadyShot function.
SOFT	Select to activate the SteadyShot function so that it leaves a slight unsteadiness on the picture so the picture looks natural.
WIDE CONV.	Select when a wide conversion lens (optional) is attached. This mode is the most effective with Sony VCL-HG0872 wide conversion lens.

AF ASSIST

▷OFF	Select to record in the standard recording mode.
ON	Select to focus manually by rotating the focus ring during auto focusing.

FLCKR REDUCE

▷ON	Select to record under normal conditions. Flickering of the screen under a light source such as fluorescent lamps will be reduced.
OFF	Select when you do not want to reduce flickering of the screen.

Note

- Flickering may not be reduced depending on the light source.

HANDLE ZOOM

Select this item to set the zoom speed of position H and L of the handle zoom switch (p. 32).

1. **Select [H] or [L] by turning the SEL/PUSH EXEC dial, then press the dial.**
2. **Select a zoom speed by turning the SEL/PUSH EXEC dial, then press the dial.**
   Speeds 1 through 8 are available. The larger the number, the faster the zoom speed.
3. **Select [OK] by turning the SEL/PUSH EXEC dial, then press the dial.**

4 Press MENU to hide the menu screen.

ZEBRA LEVEL

See page 40 for details.

CENTER MARKR

▷OFF	Select when you do not want to display the center marker on the screen (p. 30).
ON	Select to display the center marker on the screen.

Note

- The center marker and its position do not affect the adjustment, setting, or recording in any way.

FRAME REC DV

You can record pictures with a stop-motion animated effect by alternately recording a few frames and then moving the subject a little. Operate your camcorder using the Remote Commander to prevent camera shake.

▷OFF	Select to record in the standard recording mode.
ON ( )	Select to record pictures using the FRAME REC function. **1 Select [ON], then press the dial.** **2 Press MENU to hide the menu screen.** **3 Press REC START/STOP.** A picture (approximately 6 frames) is recorded, and your camcorder enters the standby mode. **4 Move the subject and repeat step 3.**

Note

- When you use frame recording continuously, the remaining tape time will not be indicated correctly.
- The last scene will be longer than other scenes.
- You cannot record index signals during frame recording.

Using the ♪ (AUDIO SET) menu – AUDIO MIX, etc.

You can select the items listed below on the AUDIO SET menu. For details on how to select items, see “Selecting menu items” (p. 60). The default settings are marked with ▷. The indicators in parentheses appear when the setting is selected. The settings you can adjust vary depending on the power mode of your camcorder. The screen shows the items you can operate at the moment. Unavailable items will be grayed out.

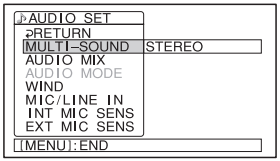

MULTI-SOUND

You can select how to play back audio on a tape that was recorded in stereo mode using another camcorder.

▷STEREO	Select to play back a stereo tape or dual sound track tape with both main and sub sound.
1	Select to play back a stereo tape with the left channel sound or a dual sound track tape with the main sound.
2	Select to play back a stereo tape with the right channel sound or a dual sound track tape with the sub sound.

Note

- You can play back a dual sound track cassette on this camcorder. However, you cannot record a dual sound track on this camcorder.
- The setting returns to [STEREO] when you disconnect the power source from your camcorder for more than 5 minutes.

Tip

- If you want to distribute the sound that was recorded in only L (left) channel using an external monaural microphone to be output from both right and left channels, select [1].

AUDIO MIX DV

You can adjust the audio balance between the originally recorded sound (ST1) and sound added afterwards (ST2) on the tape (p. 91).

Note

- You cannot adjust sound recorded in 16 bit audio mode.
- Only the originally recorded sound will be heard when you disconnect the power source from your camcorder for more than 5 minutes.

AUDIO MODE DV

▷12BIT	Select to record in the 12-bit mode (2 stereo sounds).
16BIT (♪16b)	Select to record in the 16-bit mode (1 stereo sound with high quality).

Note

- When recording in the HDV format, sound is automatically recorded in [16BIT] mode.

WIND

▷ON	Standard setting.
OFF	Select when you want to record the sound as it is without reducing the noise caused by wind.

Tip

- When using the external microphone, you can reduce the wind noise by switching the frequency response. Set the low-cut switch to V.

MIC/LINE IN

▷EXT MIC	Select to input an audio signal when a microphone is connected to the MIC/LINE jack.
LINE	Select to input an audio signal when an audio device is connected to the MIC/LINE jack.

INT MIC SENS

▷NORMAL	The standard setting.
HIGH	Use this setting to record a quiet sound. When a loud sound is recorded with this setting, the sound may be distorted. Make a trial recording in advance.

EXT MIC SENS

▷ECM-672	Select when you use the supplied microphone (ECM-672).
OTHERS	Select to use other microphones.

Using the ▭ (LCD/VF SET) menu – LCD COLOR, etc.

You can select the items listed below on the LCD/VF SET menu. For details on how to select items, see “Selecting menu items” (p. 60).
The default settings are marked with ▷. The settings you can adjust vary depending on the power mode of your camcorder. The screen shows the items you can operate at the moment. Unavailable items will be grayed out.

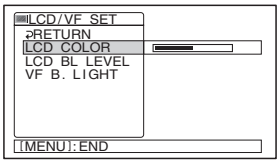

LCD COLOR

Turn the SEL/PUSH EXEC dial to adjust the color on the LCD screen. The recorded picture will not be affected by this setting.

LCD BL LEVEL

You can adjust the brightness of the LCD screen’s backlight. The recorded picture will not be affected by this setting.

▷NORMAL	Standard brightness.
BRIGHT	Select to brighten the LCD screen.

Note

- When you connect your camcorder to outside power sources, [BRIGHT] is automatically selected for this setting.

VF B.LIGHT

You can adjust the brightness of the viewfinder. The recorded picture will not be affected by this setting.

▷NORMAL	Standard brightness.
BRIGHT	To brighten the viewfinder screen.

Note

- When you connect your camcorder to outside power sources, [BRIGHT] is automatically selected for this setting.

Using the ⇆ (IN/OUT REC) menu – REC FORMAT/TV TYPE, etc.

You can select the items listed below on the IN/OUT REC menu. For details on how to select these items, see "Selecting menu items" (p. 60). The default settings are marked with ⊳. The indicators in parentheses appear when the setting is selected. The settings you can adjust vary depending on the power mode of your camcorder. The screen shows the items you can operate at the moment. Unavailable items will be grayed out.

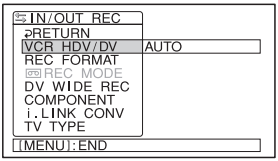

VCR HDV/DV

Select the playback signal. Normally select [AUTO].
When the camcorder is connected to another device using the i.LINK cable, select the signal to be input/output from the i HDV/DV jack. The selected signal is recorded or played back.

⊳AUTO	• Select this to play back signals by switching the format between HDV and DV automatically. • For an i.LINK connection, select this to record/play back signals input/output from the i HDV/DV jack by switching the format between HDV and DV automatically.
HDV	• Select this to play back the signals in the HDV format only. • For an i.LINK connection, select this to record/play back the input/output signals in the HDV format only. Select this when connecting the camcorder to a computer, etc. (p. 89).
DV	• Select this to play back the signals in the DV format only. • For an i.LINK connection, select this to record/play back the input/output signals in the DV format only. Select this when connecting the camcorder to a computer, etc. (p. 89).

Note

- Disconnect the i.LINK cable before setting [VCR HDV/DV]. Otherwise, the connected TV may not be able to recognize the video signal from this camcorder.
- When [AUTO] is selected and the signal switches between HDV and DV, the picture and sound disappear temporarily.
- When [i.LINK CONV] is set to [ON], pictures are output as follows:
  – at [AUTO], an HDV signal is converted to the DV format and output; a DV signal is output as it is.
  – at [HDV], an HDV signal is converted to the DV format and output; a DV signal is not output.
  – at [DV], a DV signal is output as it is; an HDV signal is not output.

➡continued

REC FORMAT

Selects a recording format when the POWER switch is set at CAMERA. The format lamp of the selected format will light up during recording.

▷HDV1080i (HDV1080i)	Select to record in the HDV1080i specification.
DV (DV)	Select to record in the DV format.

Tip

- When you output the picture during recording simultaneously to a connected device using the i.LINK cable, also set [i.LINK CONV] accordingly (p. 72).

REC MODE DV

▷SP (SP)	Select to record in the SP (Standard Play) mode on a tape.
LP (LP)	Select to increase the recording time to 1.5 times that of the SP mode (Long Play). The use of Sony Excellence/Master mini DV cassettes is recommended to get the most out of your camcorder.

Note

- You cannot add sound on a tape recorded in the LP mode.
- If you record in the LP mode, a random square noise may appear or sound may be interrupted when you play back the tape on other camcorders or VCRs.
- When you mix recordings in the SP mode and in the LP mode on one tape, the playback picture may be distorted or the time code may not be written properly between the scenes.

DV WIDE REC DV

You can display pictures recorded in the DVCAM (DV) format on the entire TV screen by setting this item at the time of recording. Refer to the operating instructions supplied with your TV as well.

▷ON — Select to view the recorded pictures on a 16:9 wide TV screen.

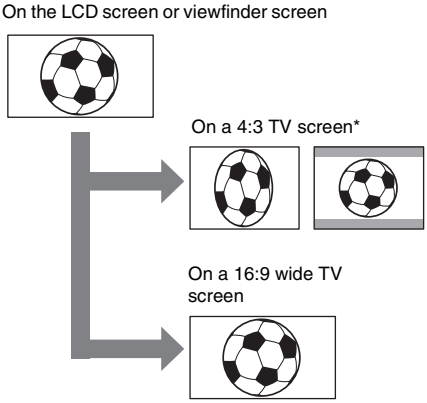

OFF (4:3) — Select to view the recorded pictures on a 4:3 TV screen.

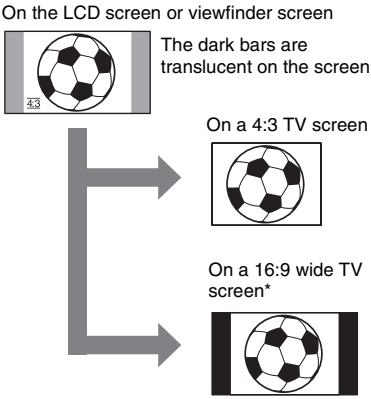

* The playback picture may look different depending on the TV connected.

➡continued

COMPONENT

480i	Select when connecting your camcorder to a TV with the component input jack.
▷1080i/480i	Select when connecting your camcorder to a TV that has the component input jack and is capable of displaying the 1080i signal.

i.LINK CONV

When the POWER switch is set to CAMERA, this setting is effective only when [HDV1080i] is selected in [REC FORMAT].
When the POWER switch is set to VCR, this setting is effective only when [AUTO] or [HDV] is selected in [VCR HDV/DV].

▷OFF	Select to output the pictures from the i HDV/DV jack in accordance with the [REC FORMAT] and [VCR HDV/DV] settings.
ON (HDV→DV)	Select to always output the pictures in the DV format from the i HDV/DV jack.

Note

- See [VCR HDV/DV] for information about an input signal via an i.LINK connection.
- Disconnect the i.LINK cable before setting [i.LINK CONV]. Otherwise, the connected video device may not be able to recognize the video signal from this camcorder.

TV TYPE

You need to convert the signal depending on the TV connected.

▷16:9

Select to view your pictures on a 16:9 wide TV.
The recorded pictures will appear as follows:

When HDV pictures are played back

When DV pictures are played back

4:3

Select to view your pictures on a 4:3 standard TV.
The recorded pictures will appear as follows:

When HDV pictures are played back

When DV pictures are played back

Tip

- When you view pictures recorded with [DV WIDE REC] set to [ON] on a 4:3 standard TV, pictures may appear as they are in height, but are compressed in width depending on the TV. If you view the recorded pictures on such type of 4:3 standard TV, set [DV WIDE REC] to [OFF] before recording.

A/V → DV OUT DV

You can connect a digital device and an analog device to your camcorder and convert the signal transmitted from the connected devices to the appropriate signal on your camcorder.

▷OFF	Select when you are not using the Signal conversion function.
ON (A/V→DV)	To output analog images and sound in digital format using your camcorder. The analog signal input to the AUDIO/VIDEO jack of your camcorder will be converted and output from the i.LINK Interface of your camcorder. For details, see page 93.

Using the (OTHERS) menu – CLOCK SET/WORLD TIME, etc.

You can select the items listed below on the OTHERS menu. For details on how to select these items, see “Selecting menu items” (p. 60). The default settings are marked with ▷. The indicators in parentheses appear when the setting is selected. The settings you can adjust vary depending on the power mode of your camcorder. The screen shows the items you can operate at the moment. Unavailable items will be grayed out.

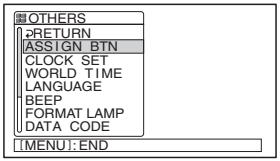

ASSIGN BTN

You can assign functions to the ASSIGN buttons (p. 80).

CLOCK SET

You can set the date and time (p. 22).

WORLD TIME

You can adjust the time difference when using your camcorder abroad. Set the time difference by turning the SEL/PUSH EXEC dial, the clock will be adjusted in accordance with the time difference. If you set the time difference to 0, the clock returns to the originally set time.

LANGUAGE

You can select or change the language used for the on-screen display (p. 24). You can select from English, Simplified English, Canadian-French, Latin American Spanish, Brazilian-Portuguese, Traditional-Chinese, or Korean.

BEEP

▷MELODY	Select to play a melody when you start/stop recording, or when an unusual condition occurs on your camcorder.
NORMAL	Select to sound a beep instead of the melody.
OFF	Select to cancel the melody and the beep sound.

REC LAMP

▷ON	Select to turn on the camera recording lamps on the front and rear of your camcorder during recording.
OFF	Select this setting in the following recording situations. The camera recording lamps on the front and rear will not light up during recording. • When you do not want the subject to be nervous about being recorded. • When you are recording close to the subject. • When the subject reflects the light of the recording lamp.

FORMAT LAMP

▷ON	Select to turn on the format lamp. The lamp of the format that is selected in [REC FORMAT] lights up when the POWER switch is set to CAMERA. The lamp of the format that is selected in [VCR HDV/DV] lights up when the POWER switch is set to VCR.
OFF	Select when you do not want to turn on the format lamp. The i.LINK lamp also does not light up.

Note

- The format lamp lights up according to the format of the playback or of an input signal from another device when [VCR HDV/DV] on the (IN/OUT REC) menu is set to [AUTO].

IRIS DIAL

You can select the rotation direction of the iris dial to open or close the iris.

▷NORMAL	Select to rotate clockwise when looked at from the lens side to close the iris and decrease the light volume.
OPPOSITE	Select to rotate counter clockwise when looked at from the lens side to close the iris and decrease the light volume.

DATA CODE

Select the item to be displayed when you press DATA CODE (p. 53).

▷DATE/CAM	Select to display the date and time, or the camera settings data during playback.
DATE	Select to display the date and time during playback.

LETTER SIZE

▷NORMAL	Select to display the menu screen at normal size.
2x	Select to display the selected menu item at double the normal height.

➡*continued*

REMAINING

▷AUTO	Select to display the remaining tape indicator for about 8 seconds: • After you set the POWER switch to CAMERA or VCR with a cassette inserted, and your camcorder calculates the remaining amount of tape. • After you press ► (play) or DISPLAY/BATT INFO.
ON	Select to always display the remaining tape indicator.

DISP OUTPUT

▷LCD PANEL	Select to show indicators such as the time code on the LCD screen and in the viewfinder.
V-OUT/PANEL	Select to show indicators such as the time code on the TV screen, LCD screen, and in the viewfinder.

Note

- You cannot input a signal to your camcorder if you press DISPLAY/BATT INFO while [V-OUT/PANEL] is selected.

REMOTE CTRL

▷ON	Select when using the Remote Commander supplied with your camcorder.
OFF	Select to deactivate the Remote Commander to prevent your camcorder from responding to a command sent by another VCR remote control unit.

Note

- The setting returns to [ON] when you have the power source disconnected from your camcorder for more than 5 minutes.

Customizing Personal Menu

The available items vary depending on the power mode of your camcorder.
Unavailable items will be grayed out.
You can add frequently used menu items to Personal Menu, or sort them in the order you like (customizing). You can customize the Personal Menu for each power mode of your camcorder.

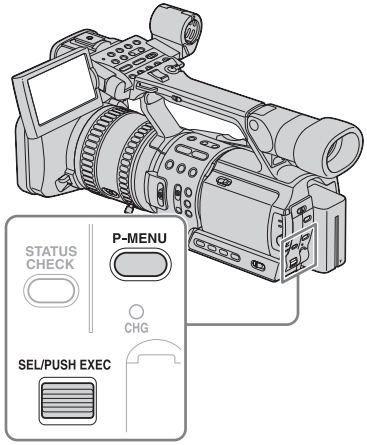

1 **Press P-MENU.**

2 **Select the desired item by turning the SEL/PUSH EXEC dial, then press the dial.**

3 **Select the desired setting by turning the SEL/PUSH EXEC dial, then press the dial.**

Adding a menu – Add

You can add frequently used menu items to Personal Menu for easier and faster access.

Note

- You can add up to 28 menu items each for the CAMERA and VCR modes. If you want to add more, you must delete a less important menu item before adding a new menu item (p. 78).

1 **Press P-MENU.**

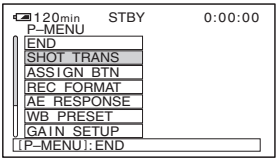

2 **Select [P-MENU SETUP] by turning the SEL/PUSH EXEC dial, then press the dial.**

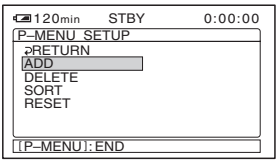

3 **Select [ADD] by turning the SEL/PUSH EXEC dial, then press the dial.**

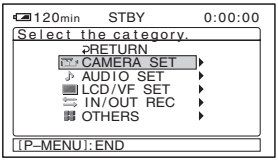

➡*continued*

4 **Select a menu category by turning the SEL/PUSH EXEC dial, then press the dial.**

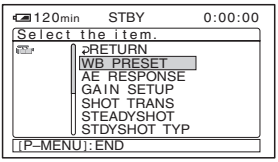

5 **Select a menu item by turning the SEL/PUSH EXEC dial, then press the dial.**

The available items vary depending on the power mode of the camcorder.
Only the available items are displayed.

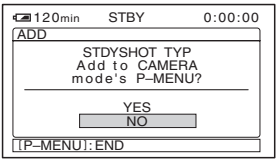

6 **Select [YES] by turning the SEL/PUSH EXEC dial, then press the dial.**

The menu is added to the end of the list.

7 **Press P-MENU.**

Deleting menu – Delete

1 **Press P-MENU.**

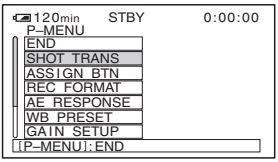

2 **Select [P-MENU SETUP] by turning the SEL/PUSH EXEC dial, then press the dial.**

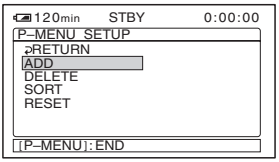

3 **Select [DELETE] by turning the SEL/PUSH EXEC dial, then press the dial.**

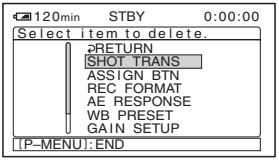

4 **Select the item that you want to delete by turning the SEL/PUSH EXEC dial, then press the dial.**

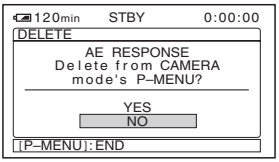

5 **Select [YES] by turning the SEL/PUSH EXEC dial, then press the dial.**

The selected menu is deleted from Personal Menu.

6 **Press P-MENU.**

Arranging the order of menus displayed on Personal Menu – Sort

You can sort the menus added to Personal Menu in the desired order.

1 Press P-MENU.

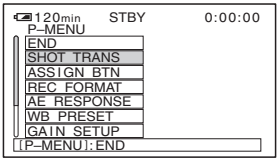

2 Select [P-MENU SETUP] by turning the SEL/PUSH EXEC dial, then press the dial.

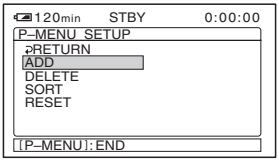

3 Select [SORT] by turning the SEL/PUSH EXEC dial, then press the dial.

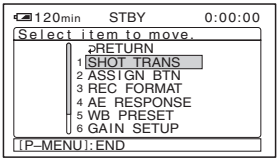

4 Select the menu item you want to move by turning the SEL/PUSH EXEC dial, then press the dial.

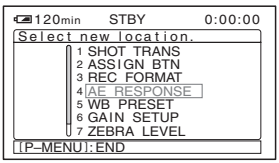

5 Move the menu item to the desired place by turning the SEL/PUSH EXEC dial.

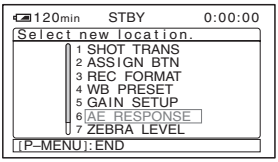

6 Press the SEL/PUSH EXEC dial.

To sort more items, repeat steps 4 to 6.

7 Press P-MENU.

Initializing the settings – Reset

You can initialize Personal Menu to the default settings after adding or deleting menus.

1 Press P-MENU.

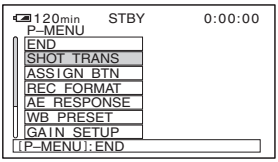

2 Select [P-MENU SETUP] by turning the SEL/PUSH EXEC dial, then press the dial.

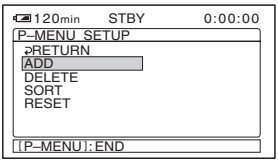

➡continued

3 **Select [RESET] by turning the SEL/PUSH EXEC dial, then press the dial.**

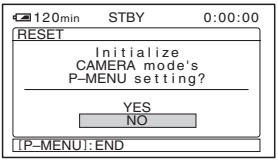

4 **Select [YES] by turning the SEL/PUSH EXEC dial, then press the dial.**

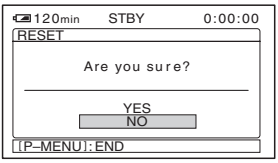

5 **Select [YES] by turning the SEL/PUSH EXEC dial, then press the dial.**

The Personal Menu settings return to the default settings.
To cancel initialization, select [NO].

6 **Press P-MENU.**

Assigning the functions

Depending on the functions, you need to assign them to the ASSIGN buttons to use them. You can assign single function to each ASSIGN 1/2/3 button.

Functions you can assign to the ASSIGN buttons

- [FADER] (p. 48)
- [STEADYSHOT]
- [INDEX SAVE] (p. 49)
- [AUDIO DUB] (p. 91) DV
- [DISPLAY] (p. 53)
- [BARS] (p. 30)

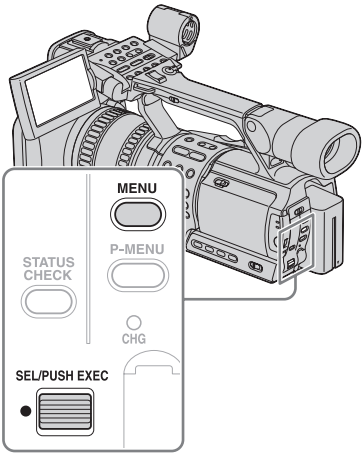

1 **Press MENU.**

2 **Select the (OTHERS) menu by turning SEL/PUSH EXEC dial, then press the dial.**

3 **Select [ASSIGN BTN] by turning SEL/PUSH EXEC dial, then press the dial.**

4 Select the number of the ASSIGN button you want to assign the function by turning SEL/PUSH EXEC dial, then press the dial.

[ASSIGN1] through [ASSIGN3] are available. [------] is displayed at the number that no function is assigned.

5 Select the function to be assigned by turning SEL/PUSH EXEC dial, then press the dial.

6 Select [OK] by turning SEL/PUSH EXEC dial, then press the dial.

7 Press MENU to hide the menu.

Tip

- When you press the ASSIGN button assigned to the [STEADYSHOT], the SteadyShot function is released and appears on the LCD screen. To activate the SteadyShot fucntion, press the same button again. You can select the effect level of the SteadyShot function at [STDYSHOT TYP] on the (CAMERA SET) menu (p. 64).
- There are independent buttons of DISPLAY and BARS, however you can assign them also to the ASSIGN buttons at your convenience. You can use both buttons.

Dubbing to another tape

You can copy a picture played back on your camcorder to other recording devices (such as VCRs).
Connect your camcorder to a VCR as shown in the following illustration.

Connecting a VCR

To dub to an HDV compatible device

Connect your camcorder to an HDV compatible device using the i.LINK cable (supplied).

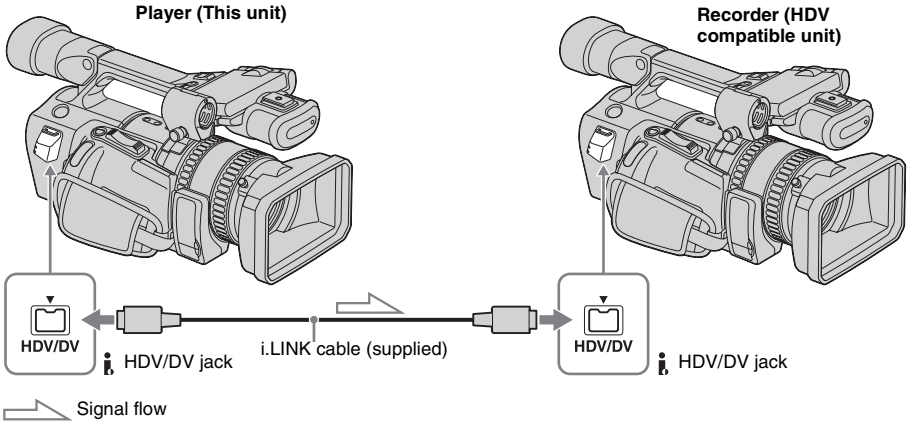

To select the video format to be dubbed

The video format to be dubbed depends on the settings of [VCR HDV/DV] and [i.LINK CONV] on the (IN/OUT REC) menu. Before setting these menu items, disconnect the i.LINK cable.

- Pictures will be dubbed in the recorded format when [VCR HDV/DV] is set to [AUTO] and [i.LINK CONV] is set to [OFF].
- Pictures, including those recorded in the HDV format, will be dubbed in the DV format when [VCR HDV/DV] is set to [AUTO], and [i.LINK CONV] is set to [ON].
- Only pictures in the selected format will be dubbed when [VCR HDV/DV] is set to [HDV] or [DV]. Other pictures will be dubbed as blank portions, so neither picture nor sound will be dubbed.

Note

- If you change the settings of [VCR HDV/DV] and [i.LINK CONV] with the i.LINK cable connected, the video device may not be able to recognize the video signal from the camcorder at the time of dubbing.
- When [VCR HDV/DV] is set to [AUTO] and the signal switches between HDV and DV, the picture and sound disappear temporarily.
- When the recorder is an Q002-HDR1, set [VCR HDV/DV] on the (IN/OUT REC) menu to [AUTO] on the recording Q002-HDR1. See page 86 about this connection.
- If the player and the recorder are both Q002-HDR1 and connected with the i.LINK cable, pictures are not continued smoothly after recording pause or stop.

To dub to a DV device

Connect your camcorder to a VCR using the i.LINK cable (supplied).

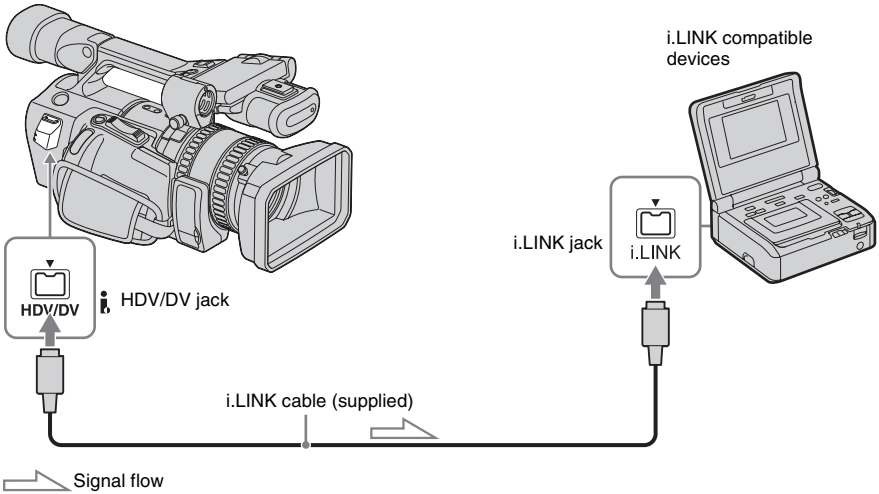

To select the video format to be dubbed

The video format to be dubbed depends on the settings of [VCR HDV/DV] (p. 69) and [i.LINK CONV] (p. 72) in the (IN/OUT REC) menu. Before setting these menu items, disconnect the i.LINK cable.

- Pictures, including those recorded in the HDV format, will be dubbed in the DV format when [VCR HDV/DV] is set to [AUTO] and [i.LINK CONV] is set to [ON].
- If the tape was recorded with the HDV and DV formats mixed, set [VCR HDV/DV] to [DV] to dub only pictures in the DV format. Pictures in the HDV format will be dubbed as blank portions, so neither picture nor sound will be dubbed.

Note

- If you change the settings of [VCR HDV/DV] and [i.LINK CONV] with the i.LINK cable connected, the video device may not be able to recognize the video signal from the camcorder at the time of dubbing.
- If [i.LINK CONV] is set to [OFF] while [VCR HDV/DV] is set to [AUTO], pictures recorded in the HDV mode will be recorded as blank portions, so neither picture nor sound will be recorded.
- When [VCR HDV/DV] is set to [HDV], the connected DV device cannot recognize pictures, so pictures will be dubbed as blank portions.
- When [VCR HDV/DV] is set to [AUTO] and the signal switches between HDV and DV, the picture and sound disappear temporarily.

To dub to an AV device

Connect your camcorder to a VCR using the A/V connecting cable (supplied).

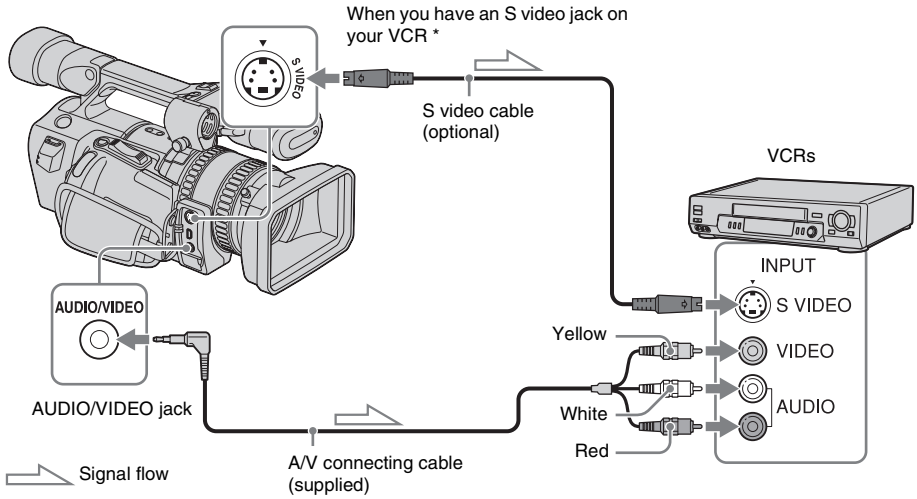

* When there is an S video jack on the device to be connected, connect an S video cable (optional) to that jack instead of using the yellow video plug of the A/V connecting cable (supplied). This connection produces higher quality DV format pictures. The audio will not be output if you connect with the S video cable alone.

Note

- Select the (OTHERS) menu, [DISP OUTPUT], then [LCD PANEL] (the default setting) (p. 76).
- When you connect your camcorder to a monaural device, connect the yellow plug of the A/V connecting cable to the video jack, and the red or the white plug to the audio jack on the VCR or the TV.

Tip

- To record the date/time and camera settings data, first have them displayed on screen (p. 53).

Dubbing to another tape

1 Connect the recording device to your camcorder (p. 82).

2 Prepare the recording device.

- Insert a cassette for recording.
- If the recording device has an input selector, set it to the input mode.

3 Prepare your camcorder for playback.

- Insert the recorded cassette.
- Set the POWER switch to VCR.

4 Start the playback on your camcorder, and record it on the VCR.

Refer to the operating instructions supplied with your VCR for details.

5 When the dubbing is finished, stop your camcorder and the VCR.

Note

- When you use the i.LINK cable, the recorded picture becomes rough when a picture is paused on your camcorder while recording it to a VCR.
- Pictures recorded in the HDV format are not output from the i HDV/DV jack during playback pause or in playback modes other than normal playback.
- When you use the i.LINK cable, you cannot record the picture and sound separately.

Tip

- The i.LINK lamp, HDV or DV, on the i HDV/DV jack holder will light up and indicate the format of the output signal when you use the i.LINK cable.
- When you use the i.LINK cable, the video and sound signals are transmitted digitally, producing high quality pictures.

Recording pictures from a VCR or TV

You can record pictures or TV programs from a VCR or TV on a tape inserted in your camcorder.

Connecting a VCR or TV

To record from an HDV compatible device

You can record and edit pictures from an HDV compatible VCR. Use your camcorder as a recorder and connect it to an HDV compatible device using the i.LINK cable (supplied).

On this camcorder (recorder), select the (IN/OUT REC) menu, [VCR HDV/DV], then [AUTO] (p. 69) before connecting.

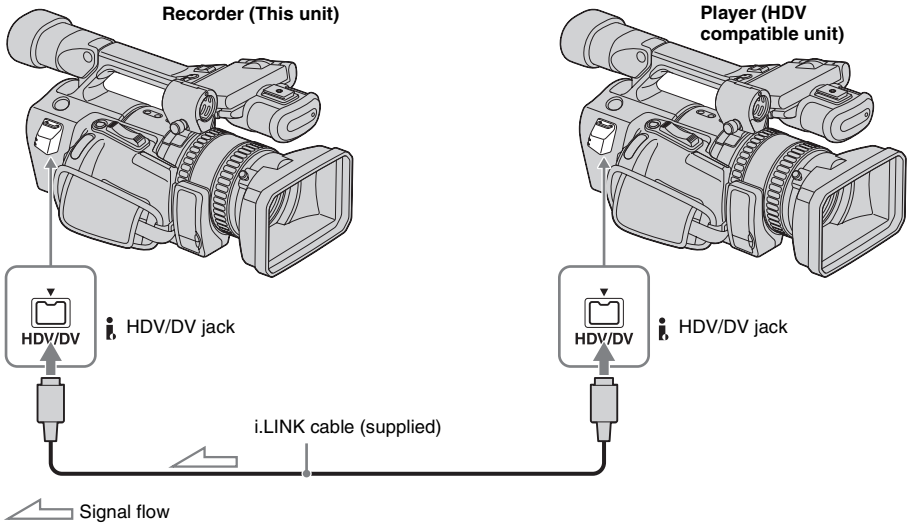

Note

- In case of digital broadcasting, you may not be allowed to record some programs for copyright reasons (p. 104).

To record from a DV/AV device

You can record and edit pictures or TV programs from a VCR or TV. Use your camcorder as a recorder and connect it to a VCR using the A/V connecting cable (supplied). You can connect a DV compatible device also using the i.LINK cable (supplied).

When you use the i.LINK cable to connect a DV compatible device, select the (IN/OUT REC) menu, [VCR HDV/DV], then [DV] or [AUTO] (p. 69) before connecting.

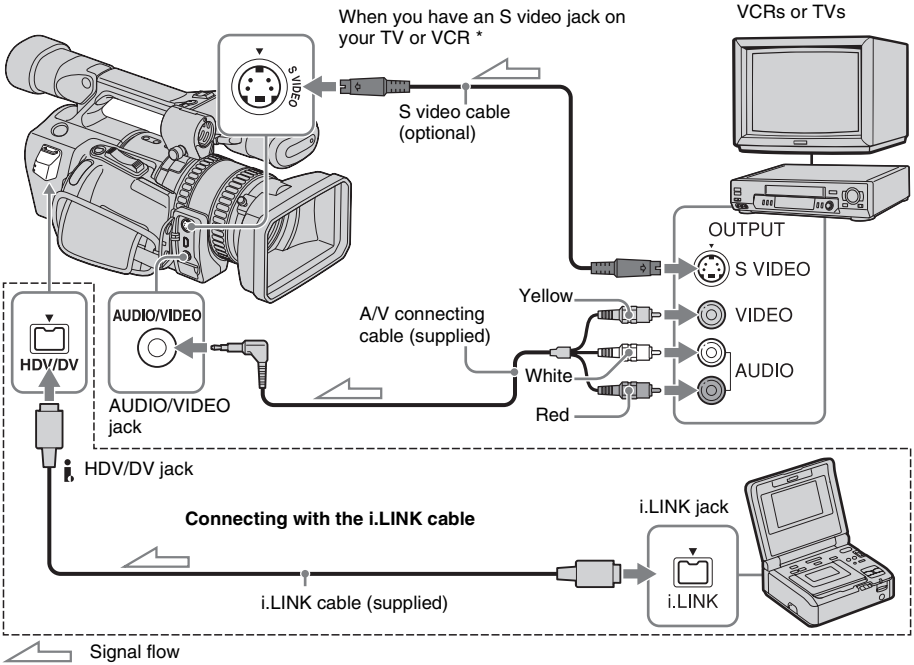

* When there is an S video jack on the device to be connected, connect an S video cable (optional) to that jack instead of using the yellow video plug of the A/V connecting cable (supplied). This connection produces higher quality DV format pictures. The audio will not be output if you connect with the S video cable alone.

Note

- You can record pictures from DV/AV devices only in the DV format.
- When you use the A/V connecting cable (supplied), select the (OTHERS) menu, [DISP OUTPUT], then [LCD PANEL] (the default setting) (p. 76).
- When you connect your camcorder to a monaural device, connect the yellow plug of the A/V connecting cable to the video jack, and the red or the white plug to the audio jack on the VCR or the TV. Only the sound from the connected plug is recorded.
- When a 4:3 video signal is input, it appears with black bands on the right and left sides on the screen of your camcorder.

Tip

- If the recording device has the i.LINK jack, it is recommended to connect it using the i.LINK cable (supplied).

Recording movies

Insert a cassette for recording in your camcorder before the following operations.

1 Connect your TV or VCR to your camcorder as a playback device (p. 86, 87).

2 If you are recording from a VCR, insert a cassette.

3 Set the POWER switch to VCR.

4 Set your camcorder to recording pause.

While pressing ❚❚ (pause), press both ● REC (record) buttons simultaneously.

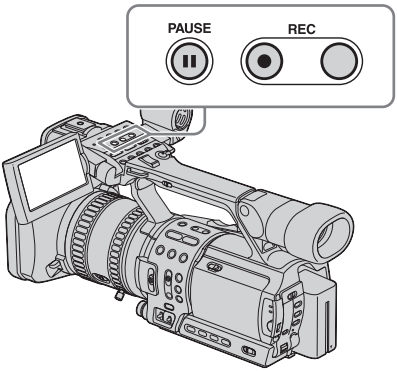

5 Start playing the cassette on your VCR, or select a TV program.

The picture played on the connected device appears on the LCD screen of your camcorder.

6 Press ❚❚ (pause) again at the point you want to start recording.

7 Press ■ (stop) to stop recording.

Note

- When you use the i.LINK cable, the recorded picture becomes rough when a picture is paused on your VCR.
- When you use the i.LINK cable, you cannot record the picture and sound separately.
- When you use the i.LINK cable, if you pause or stop the recording and restart it, the picture may not be recorded smoothly.

Tip

- The i.LINK lamp, HDV or DV, on the i HDV/DV jack holder will light up and indicate the format of the input signal when you use the i.LINK cable.
- When you use the i.LINK cable, the video and sound signals are transmitted digitally, producing high quality pictures.
- When you use the i.LINK cable, HDV/DVIN appears during recording. This indicator may appear on the screen of the playback device, however they will not be recorded.
- Index signals are automatically recorded on the tape during recording. You can also record index signals at the desired positions during recording by pressing the ASSIGN button assigned to the index function (p. 49).

Connecting to a computer

To use your camcorder by connecting it to a computer using the i.LINK cable, the computer must have an i.LINK interface, and application software to read video signals must be installed on the computer.
Refer to the manual supplied with the application software for the system requirements of the computer.

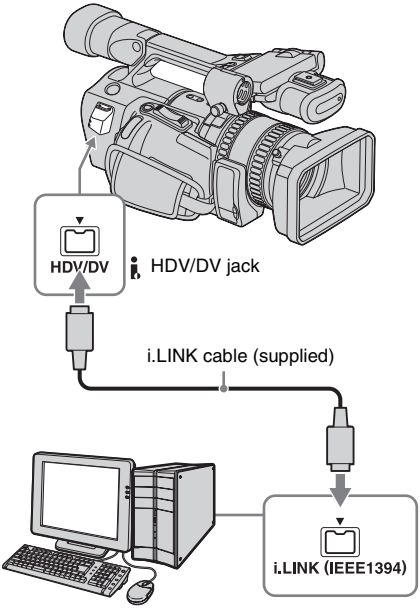

Connecting the computer

- Before connecting your camcorder to the computer with the i.LINK cable, be sure to insert the connector plug in the proper direction. If you insert the connector plug forcibly in the wrong direction, the terminal may be damaged, or this may cause a malfunction of your camcorder.
- Connect the i.LINK cable to the computer first, then to your camcorder. Connecting in the opposite order may cause static electricity to build up, resulting in a malfunction of your camcorder.
- Be sure to set [VCR HDV/DV] and [i.LINK CONV] on the ⇄ (IN/OUT REC) menu before connecting the i.LINK cable. If you connect the i.LINK cable first, the computer may hang up or may not recognize the signal from your camcorder.

Note

- Connect a computer that can handle the signal of the format indicated by the i.LINK lamps. If you connect a computer that cannot handle the signal, the computer may hang up or may not recognize the signal from your camcorder.
- Disconnect the i.LINK cable before resetting [REC FORMAT] when the POWER switch is set to CAMERA. Otherwise, the computer may hang up.

Tip

- The i.LINK lamp, HDV or DV, on the HDV/DV jack holder will light up and indicate the format of the input signal when you use the i.LINK cable.

To import pictures on a tape to the computer

- To scan pictures recorded in the HDV format on the tape in the HDV format, set [VCR HDV/DV] to [HDV] (p. 69) and [i.LINK CONV] to [OFF] (p. 72).
- To scan pictures recorded in the DV format on the tape in the DV format, set [VCR HDV/DV] to [DV] (p. 69).
- To scan pictures recorded in the HDV format on the tape in the DV format, set [VCR HDV/DV] to [HDV] (p. 69) and [i.LINK CONV] to [ON] (p. 72).

Note

- Pictures may not be imported correctly depending on the application software of the computer.
- You cannot import pictures recorded in the DV format in the HDV format.

To import pictures from the computer to your camcorder

In the HDV format

Set [VCR HDV/DV] to [HDV] (p. 69) and [i.LINK CONV] to [OFF] (p. 72).

In the DV format

Set [VCR HDV/DV] to [DV] (p. 69).

Dubbing sound to a recorded tape DV

You can record additional audio to the original sound on a tape recorded in the DV format. You can add sound to a tape already recorded in the 12-bit mode without erasing the original sound.

Preparing for audio dubbing

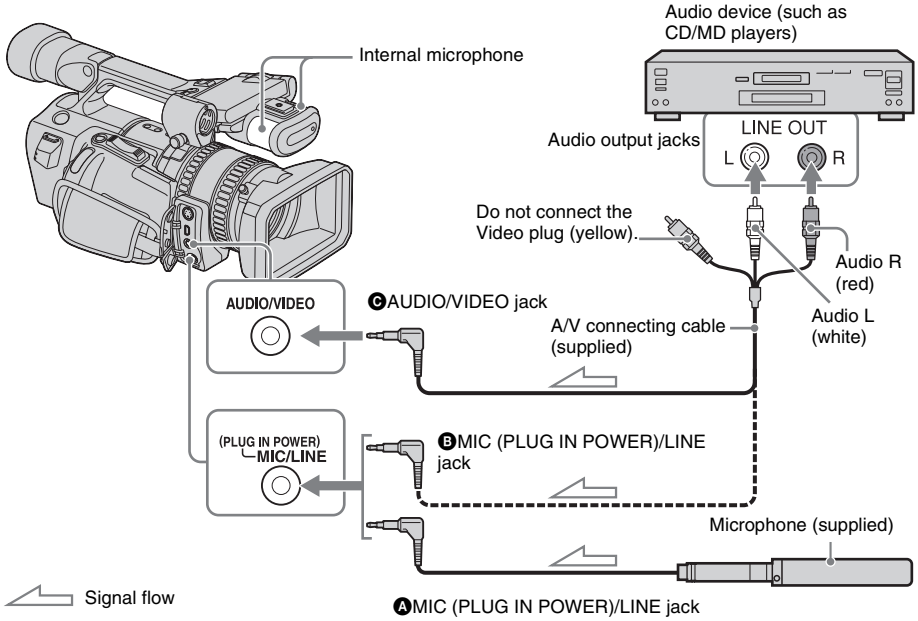

Record audio in one of the following ways.

- Using the internal microphone (no connection required).
- Connecting a microphone to the MIC/LINE jack. (A)
  Select the ♪ (AUDIO SET) menu, [MIC/LINE IN], then [EXT MIC] (p. 67).
- Connecting an audio device (optional) to the MIC/LINE jack. (B)
  Select the ♪ (AUDIO SET) menu, [MIC/LINE IN], then [LINE] (p. 67).
- Connecting an audio device to the AUDIO/VIDEO jack. (C)

The audio input to be recorded takes precedence in the order of MIC/LINE jack → AUDIO/VIDEO jack → internal microphone.

Note

- When you use the AUDIO/VIDEO jack or the internal microphone to record additional sound, the picture will not be output from the AUDIO/VIDEO jack. Check the picture on the LCD screen or the viewfinder, and the sound on the headphones.
- You cannot record additional audio:
  – When the tape is recorded in the HDV format.
  – When the tape is recorded in the 16-bit mode.
  – When the tape is recorded in the LP mode.
  – When your camcorder is connected using the i.LINK cable.

– On blank sections of the tape.
– When the write-protect tab of the cassette is set to SAVE.
– On the tape recorded on another device with a 4ch microphone (4CH MIC REC).

- When you use an external microphone (optional) to record additional audio, you can check the picture and the sound by connecting your camcorder to a TV using the A/V connecting cable. However, sound you have recorded afterwards is not output from the speaker. Check the sound by using headphones or a TV.
- The sound from a monaural device connected to the MIC/LINE jack is recorded in the L channel.

Recording sound

Assign the audio dubbing function to one of the ASSIGN buttons in advance. See page 80 for details on how to assign a function.

1 Insert a recorded cassette into your camcorder.

2 Set the POWER switch to VCR.

3 Press ► (play) to play the tape.

4 Press ❚❚ (pause) at the point where you want to start recording the sound.
The playback pauses.

5 Press the ASSIGN button assigned to audio dubbing.
The ⊖❚❚ mark appears on the LCD screen.

6 Press ❚❚ (pause) and start playing back the audio you want to record at the same time.
The ⊖ mark remains on the LCD screen while sound is recorded.
The new sound is recorded in stereo 2 (ST2).

7 Press ■ (stop) when you want to stop recording.

To set the end point for audio dubbing

During playback, press ZERO SET MEMORY at the scene at which you want to stop audio dubbing. Then, perform steps 4 to 6. The recording stops automatically at the selected scene.

Note

- You can only record additional audio over a tape recorded on your camcorder. The sound may deteriorate when you dub audio on a tape recorded on other camcorders (including other Q002-HDR1 camcorders).

Tip

- You can manually adjust the microphone volume when you are:
  – Recording sound from an external microphone or audio device connected to the MIC/LINE jack.
  – Recording sound from a device connected to the AUDIO/VIDEO jack.
  – Recording sound using the internal microphone.

Checking and adjusting the recorded sound

1 Play back the tape on which you have recorded audio following the procedures in "Recording sound" (p. 91).

2 Press MENU.

3 Select the ♪ (AUDIO SET) menu by turning the SEL/PUSH EXEC dial, then press the dial.

4 Select [AUDIO MIX] by turning the SEL/PUSH EXEC dial, then press the dial.

➡continued

5 Turn the SEL/PUSH EXEC dial to adjust the balance between the original sound (ST1) and the sound recorded afterwards (ST2), then press the dial.

The original sound (ST1) is output in the default setting.
The adjusted audio balance returns to the default setting about 5 minutes after the battery pack or other power sources have been disconnected.

6 Press MENU to hide the menu screen.

Connecting an analog VCR to the computer via your camcorder DV

– Signal conversion function

Connect an analog video device to your camcorder using the A/V connecting cable (supplied), and a digital device such as a computer to your camcorder using the i.LINK cable (supplied). Your camcorder converts the analog video signal from the VCR to a digital signal and transmits it to the computer to be dubbed.
To use the signal conversion function, application software to import video signals must be installed on the computer.

Connecting a computer

Refer to the manual supplied with the application software for the system requirements of the computer.

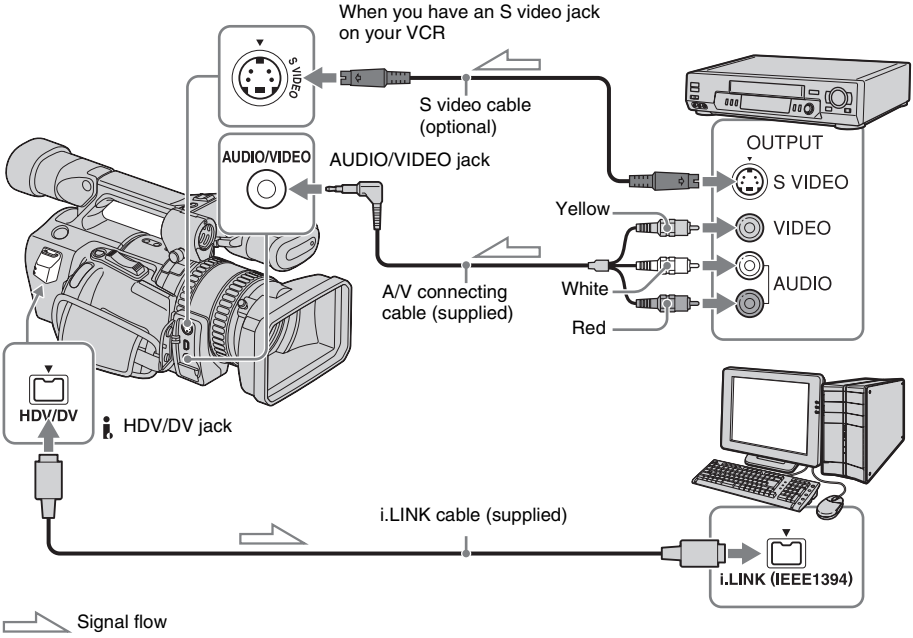

Note

- Select the (OTHERS) menu, [DISP OUTPUT], then [LCD PANEL] (the default setting) (p. 76).
- Before connecting the i.LINK cable, select the (IN/OUT REC) menu, [VCR HDV/DV], then [DV] (p. 69). If you do this operation with the i.LINK cable connected, the computer may hang up or may not recognize this camcorder.

Importing a picture to the computer

1 Turn on the analog device.

2 Set the POWER switch to VCR.

Use the AC Adaptor/charger (supplied) as the power source.

3 Press MENU.

4 Select the ⇄ (IN/OUT REC) menu by turning the SEL/PUSH EXEC dial, then press the dial.

5 Select [A/V → DV OUT] by turning the SEL/PUSH EXEC dial, then press the dial.

6 Select [ON] by turning the SEL/PUSH EXEC dial, then press the dial.

7 Press MENU to hide the menu screen.

8 Start playback on the analog device.

9 Start importing on the computer.

Refer to the manual supplied with the program software or its on-line help for details.

After importing the picture and sound

Stop importing on the computer, and stop playback on the analog device.

Note

- Your camcorder may not be able to output the signal to the computer correctly depending on the video signal input to your camcorder.
- You cannot import pictures that have been recorded using a copyright protection signal to a computer via your camcorder.
- Analog signals are not output from the COMPONENT OUTPUT jack.

Troubleshooting

If you run into any problem using your camcorder, use the following table to troubleshoot the problem. If the problem persists, remove the power source and contact your Sony dealer.
If "C:□□:□□" is displayed on the LCD screen or the viewfinder, the self-diagnosis display function is activated. See page 101 for details.

Overall operations

Symptom	Cause and/or Corrective Actions
The power does not turn on.	• The battery pack is discharged, running low, or not attached to the camcorder. ➔Attach a charged battery pack to the camcorder (p. 15). ➔Use the AC Adaptor/charger to connect to the wall outlet (p. 18). • The mode switch on the AC Adaptor/charger is set to CHARGE. ➔Set it to VCR/CAMERA (p. 13).
The camcorder does not operate even when the power is set to on.	➔Disconnect the AC Adaptor/charger from the wall outlet or remove the battery pack, then reconnect it after about 1 minute. If the functions still do not work, press the RESET button using a sharp-pointed object. If you press the RESET button, all settings including the clock setting (except the Personal Menu and Picture Profile settings) are reset.
A clattering noise is heard when the camcorder is handled with the POWER switch set to OFF (CHG) or VCR.	• This is because some lens functions on the camcorder use a linear mechanism. This is not a malfunction.
The supplied Remote Commander does not function.	➔Set [REMOTE CTRL] on the (OTHERS) menu to [ON] (p. 76). ➔Insert batteries into the battery compartment with the + – polarities correctly matching the + – marks. If this still does not solve the problem, insert new batteries since the batteries are dead (p. 119). ➔Remove any obstructions between the Remote Commander and the remote sensor.
The camcorder gets warm.	• This is because the power has been turned on for a long time. This is not a malfunction.

Batteries/Power sources

Symptom	Cause and/or Corrective Actions
The CHG (charge) lamp does not light while the battery pack is being charged.	• The mode switch on the AC Adaptor/charger is set to CHARGE. ➔Set it to VCR/CAMERA (p. 13). ➔Attach the battery pack to the camcorder correctly. If the lamp still does not light up, then it indicates that no power is supplied from the wall outlet. • The battery charge is completed (p. 15).
The CHG (charge) lamp flashes while the battery pack is being charged.	➔Attach the battery pack to the camcorder correctly. If the problem persists, disconnect the AC Adaptor/charger from the wall outlet and contact your Sony dealer. The battery pack may be damaged (p. 15, 106).
The battery pack is not charged.	➔Set the POWER switch to OFF (CHG).
The battery pack is quickly discharged.	• The temperature of the environment is too low, or the battery pack has not been charged enough. This is not a malfunction. ➔Fully charge the battery again. If the problem persists, replace the battery pack with a new one. It may be damaged (p. 15, 106).
The remaining battery time indicator does not indicate the correct time.	• The temperature of the environment is too high or too low, or the battery pack has not been charged enough. This is not a malfunction. ➔Fully charge the battery again. If the problem persists, replace the battery pack with a new one. It may be damaged (p. 15, 106).
The power turns off frequently although the remaining battery indicator indicates that the battery pack has enough power to operate.	• A problem has occurred in the remaining battery time indicator, or the battery pack has not been charged enough. ➔Fully charge the battery again to correct the indication (p. 15).
A problem occurs when the camcorder is connected to the AC Adaptor/charger.	➔Turn off the power, and disconnect the AC Adaptor/charger from the wall outlet. Then, connect it again.
The CHARGE lamp of the AC Adaptor/charger blinks and "CHARGE ERROR" appears on the display window.	• If the battery pack is charged in very warm locations such as in the direct sunlight, charging stops to protect the battery and the AC Adaptor/charger. ➔Charge at the recommended temperature (10 – 30°C (50 – 86°F). ➔Remove the battery pack once, and attach the same battery pack again. • If the CHARGE lamp lights and does not blink again, there is no problem. Charging has been done successfully. ➔If the CHARGE lamp blinks again, attach another battery pack. If the CHARGE lamp blinks again, the AC Adaptor/charger could be damaged. If the CHARGE lamp lights up, then blinks again, the first battery pack could be damaged. Disconnect the plug from the wall outlet, and contact your nearest Sony dealer.

Cassette tapes

Symptom	Cause and/or Corrective Actions
Cassette cannot be ejected from the compartment.	➔Make sure the power source (battery pack or AC Adaptor/charger) is connected correctly (p. 15). ➔Remove the battery pack from the camcorder, then attach it again (p. 15). ➔Attach a charged battery pack to the camcorder (p. 15).
Cassette is not ejected even when the cassette lid is open.	➔Moisture condensation is starting in your camcorder (p. 108).
The Cassette Memory indicator does not appear while using a cassette with Cassette Memory.	➔Since your camcorder is not compatible with the Cassette Memory, no indicator appears.
The remaining tape indicator is not displayed.	➔Set [REMAINING] to [ON] on the (OTHERS) menu to always display the remaining tape indicator (p. 76).

LCD screen/viewfinder

Symptom	Cause and/or Corrective Actions
An unknown language appears on the screen.	➔See page 24.
An unknown indicator appears on the screen.	➔Refer to the indicator list (p. 121).
The picture in the viewfinder is not clear.	➔Use the viewfinder lens adjustment lever to adjust the lens (p. 21).
The picture in the viewfinder has disappeared.	➔Close the LCD panel. The picture is not displayed in the viewfinder when the LCD panel is open (p. 21).

Recording

Symptom	Cause and/or Corrective Actions
The tape does not start when you press REC START/STOP.	➔Set the POWER switch to CAMERA (p. 20). ➔The tape has reached the end. Rewind it, or insert a new cassette. ➔Set the write-protect tab to REC or insert a new cassette (p. 104). ➔The tape is stuck to the drum due to moisture condensation. Remove the cassette and leave your camcorder for at least 1 hour, then re-insert the cassette (p. 108).
The tape does not start when you press REC START/STOP on the handle.	➔Release the HOLD lever (p. 30).
The power abruptly turns off.	➔Charge the battery pack (p. 15).
The zoom does not function.	➔Set the ZOOM switch correctly (p. 31). ➔When using the zoom lever on the Remote Commander, set the ZOOM switch to LEVER/REMOTE (p. 32).
The handle zoom does not work.	➔Set the handle zoom switch to H or L (p. 32).
Zoom or shot transition stops in the middle of the operation.	• This occurs when you replace a cassette during the operation.
The SteadyShot does not function.	➔Set [STEADYSHOT] to [ON] in the (CAMERA SET) menu (p. 63). ➔Press the ASSIGN button assigned to the SteadyShot (p. 80).
The auto focus does not function.	➔Set the FOCUS switch to AUTO to enable auto focus (p. 41). ➔The recording conditions are not suitable for auto focus. Adjust the focus manually (p. 41).
The focus is set to auto, but the focus shifts as the focus ring rotates.	• Even during auto focusing, you can focus manually by rotating the focus ring (p. 33).
A vertical band appears when recording candlelight or electric light in the dark.	• This occurs when the contrast between the subject and the background is too high. This is not a malfunction.
A vertical band appears when recording a bright subject.	• This phenomenon is called the smear effect. This is not a malfunction.
Tiny spots in white appear on the screen.	• The spots appear at a slower shutter speed. This is not a malfunction.
Oblique stripes appear on the screen.	➔Set the ZEBRA/PEAKING switch to OFF (p. 40).
Picture appears too bright on the screen, and the subject does not appear on the screen.	➔Cancel the back light function (p. 34).

Playback

Symptom	Cause and/or Corrective Actions
Cannot play back.	➔If the tape has reached the end, rewind the tape (p. 51).
Cannot play back in reverse direction.	➔Reverse playback is not possible with the tape recorded in the HDV format.
Horizontal lines appear on the picture. The displayed pictures are not clear or do not appear.	➔Clean the head using the cleaning cassette (p. 109).
Fine patterns flicker, diagonal lines look jagged.	➔Adjust [SHARPNESS] to the – (soften) side in the PICTURE PROFILE function (p. 43).
No sound or only a low sound is heard.	➔Set [MULTI-SOUND] to [STEREO] on the (AUDIO SET) menu (p. 66). ➔Turn up the volume (p. 51). ➔On the (AUDIO SET) menu, adjust [AUDIO MIX] from the [ST2] (additional sound) side until the sound is heard appropriately (p. 66). ➔When you are using an S VIDEO cable or a component video cable, make sure the red and white plugs of the A/V connecting cable are connected as well (p. 55).
The sound breaks off.	➔Clean the head using the cleaning cassette (p. 109).
The date search and index search do not work.	• There is a blank section at the beginning or in the middle of the tape. This is not a malfunction.
"---" is displayed on the screen.	• The tape you are playing was recorded without setting the date and time. • A blank section on the tape is being played. • The data code on a tape with a scratch or noise cannot be read.
END SEARCH does not work.	• The POWER switch is set to CAMERA. • The cassette was ejected after recording (p. 53). • The cassette is new and has nothing recorded.
END SEARCH does not work correctly.	• There is a blank section at the beginning or in the middle of the tape. This is not a malfunction.
No picture appears during END SEARCH or Rec Review.	• The tape was recorded in both HDV and DV formats. This is not a malfunction.
Cannot view the picture or hear the sound on the TV connected with the component video cable.	➔Set [COMPONENT] on the (IN/OUT REC) menu according to the requirements of the connected device (p. 72). ➔When you are using the component video cable, make sure the red and white plugs of the A/V connecting cable are connected (p. 55).
The picture appears distorted on the 4:3 TV.	• This happens when viewing a picture recorded in the 16:9 wide mode on a 4:3 TV. ➔To play back the picture, set [TV TYPE] on the (IN/OUT REC) menu (p. 72). ➔Before recording, set [DV WIDE REC] on the (IN/OUT REC) menu to [OFF] (p. 50).
Noises appear and PAL or 50i is displayed on the screen.	• The tape was recorded in a TV color system other than that of your camcorder. This is not a malfunction (p. 103).

➔*continued*

Symptom	Cause and/or Corrective Actions
♪4ch-12b appears on the LCD screen.	• This appears when you play back a tape recorded on other recording devices using a 4-channel microphone. This camcorder does not comply with the 4-channel microphone recording standard.

Dubbing

Symptom	Cause and/or Corrective Actions
Pictures from connected devices are not displayed on the LCD screen or the viewfinder.	➔Set [DISP OUTPUT] to [LCD PANEL] on the (OTHERS) menu (p. 76).
Cannot dub correctly using the A/V connecting cable. DV	➔Set [DISP OUTPUT] to [LCD PANEL] on the (OTHERS) menu (p. 76).
When connected using the i.LINK cable, no picture appears on the monitor screen during dubbing.	➔Set [VCR HDV/DV] on the (IN/OUT REC) menu according to the requirements of the connected device (p. 69).
New sound added to a recorded tape is not heard. DV	➔In the (AUDIO SET) menu, adjust [AUDIO MIX] from the [ST1] (original sound) side until the sound is heard properly (p. 66).
Pictures disappears for a moment when you press EXPANDED FOCUS.	• If you press EXPANDED FOCUS during recording in the DV format while transferring pictures to the connected device, pictures disappear when switching from the normal size to the expanded size.

Warning indicators and messages

Self-diagnosis display/Warning indicators

If indicators appear on the LCD screen or in the viewfinder, check the following. See the page in parentheses for details.

Indication	Cause and/or Corrective Actions
C:□□:□□/E:□□:□□ (Self-diagnosis display)	Some symptoms can be fixed by yourself. If the problem persists even after you tried a couple of times, contact your Sony dealer or local authorized Sony service facility. **C:04:□□** →A battery pack that is not an "InfoLITHIUM" battery pack is being used. Use an "InfoLITHIUM" battery pack (p. 105). **C:21:□□** →Moisture condensation has occurred. Remove the cassette and leave your camcorder for at least 1 hour, then re-insert the cassette (p. 108). **C:22:□□** →Clean the head using the cleaning cassette (p. 109). **C:31□□ / C:32□□** →Symptoms that are not described above have occurred. Remove and insert the cassette, then operate your camcorder again. Do not perform this procedure if moisture starts to condense (p. 108). →Remove the power source. Reconnect it again and operate your camcorder again. →Change the tape. **E:61:□□ / E:62:□□** →Contact your Sony dealer or local authorized Sony service facility. Inform them of the 5-digit code, which starts from "E."
(Battery level warning)	• The battery pack is nearly used up. • Depending on the operating, environmental, or battery conditions, the indicator may flash, even if there are approximately 5 to 10 minutes remaining.
(Moisture condensation warning)*	→Eject the cassette, set the POWER switch to OFF (CHG), and leave it for about 1 hour with the cassette lid open (p. 108).
(Warning indicator pertaining to the tape)	**Slow flashing:** • There is less than 5 minutes remaining on the tape. • No cassette is inserted.* • The write-protect tab on the cassette is set to lock (p. 104).* **Fast flashing:** • The tape has run out.*
⏏ (Eject cassette warning)*	**Slow flashing:** • The write-protect tab on the cassette is set to lock (p. 104). **Fast flashing:** • Moisture condensation has occurred (p. 108). • The self-diagnosis display code is displayed (p. 101).

* You hear a melody or beep sound when the warning indicators appear on the screen.

Warning messages

If messages appear on the screen, check the following. See the page in parentheses for details.

Subjects	Indications	Corrective Actions/ References
Battery	Use the "InfoLITHIUM" battery pack.	→See page 105.
	Battery level is low.	→Charge the battery (p. 15).
	Old battery. Use a new one.	→See page 105.
	⏏ Re-attach the power source.	–
Moisture condensation	⏏ Moisture condensation. Eject the cassette.	→See page 108.
	Moisture condensation. Turn off for 1H.	→See page 108.
Cassette/Tape	Insert a cassette.	→See page 23.
	⏏ Reinsert the cassette.	→The cassette might be damaged, etc.
	⏏ The tape is locked - check the tab.	→See page 104.
	The tape has reached the end.	–
Others	Cannot record due to copyright protection.	–
	Cannot add audio. Disconnect the i.LINK cable.	→See page 90.
	Not recorded in SP mode. Cannot add audio.*	→See page 90.
	Not recorded in 12-bit audio. Cannot add audio.*	→See page 90.
	Cannot add audio on the blank portion of a tape.	→See page 90.
	HDV recorded tape. Cannot add audio.	→See page 90.
	Cannot add audio.	→See page 90
	No registered value set in SHOT-A.	→Register a setting in A (p. 46).
	No registered value set in SHOT-B.	→Register a setting in B (p. 46).
	Change to correct tape format.	→The pictures cannot be played back because of an incompatible format.
	No output image in "VCR HDV/DV". Change format.	→Stop inputting the playback signal, or reset [VCR HDV/DV] (p. 69).
	Already added to CAMERA mode's P-MENU.	–
	Already added to VCR mode's P-MENU.	–
	Dirty video head. Use a cleaning cassette.	→See page 109.

* Appears only for the pictures recorded in the DV format.

Using your camcorder abroad

Power supply

You can use your camcorder in any country/regions using the AC Adaptor/charger supplied with your camcorder within AC 100 V to 240 V, 50/60 Hz.
Use a commercially available AC plug adaptor [a], if necessary, depending on the design of the wall outlet [b].

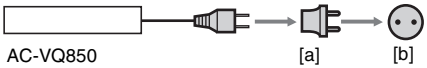

On TV color systems DV

Your camcorder is an NTSC system-based camcorder. If you want to view the playback picture recorded in the DV format on a TV, it must be an NTSC system-based TV (see following list) with the AUDIO/VIDEO input jack.

System	Used in
NTSC	Bahama Islands, Bolivia, Canada, Central America, Chile, Colombia, Ecuador, Guyana, Jamaica, Japan, Korea, Mexico, Peru, Surinam, Taiwan, the Philippines, the U.S.A., Venezuela, etc.
PAL	Australia, Austria, Belgium, China, Czech Republic, Denmark, Finland, Germany, Holland, Hong Kong, Hungary, Italy, Kuwait, Malaysia, New Zealand, Norway, Poland, Portugal, Singapore, Slovak Republic, Spain, Sweden, Switzerland, Thailand, United Kingdom, etc.
PAL - M	Brazil
PAL - N	Argentina, Paraguay, Uruguay
SECAM	Bulgaria, France, Guiana, Iran, Iraq, Monaco, Russia, Ukraine, etc.

On HDV compatible TVs HDV1080i

An HDV compatible TV with the component input jack is required to view playback pictures recorded in the HDV format. See the table below.
It is recommended to use the i.LINK cable to connect these TVs.

Sony TV models
KD-34XBR960, KD-36XS955, KD-34XS955, KD-30XS955
KDE-55XBR950, KDE-50XS955, KDE-42XS955, KDE-37XS955
KDF-60WE655, KDF-55WE655, KDF-50WE655, KDF-42WE655, KDF-60XS655, KDF-55XS655
KDP-57WS655, KDP-51WS655
KE-42M1
KE-MX42K1, KE-MX42N1, KE-MX32K1, KE-MX32N1, KE-P42M1
KF-50WE620, KF-42WE620
KLV-32M1, KLV-23M1
KP-57WS520, KP-51WS520, KP-46WT520
KV-36HS420, KV-34HS420, KV-32HS420, KV-30HS420, KV-27HS420
KV-DX32K9H, KV-DX32K90B, KV-DX32K90L
KV-HR36N90, KV-HR36K90, KV-HR32K90, KV-HR34N90, KV-HR29N90
KV-HZ34N90, KV-HZ29N90, etc.

As of 9st February, 2005

Note

- Some models are not available depending on the country or region.

Simple setting of the clock by time difference

You can easily set the clock to the local time by setting a time difference when using your camcorder abroad. Select [WORLD TIME] on the (OTHERS) menu, then set the time difference (p. 74).

HDV format and recording/playback

Your camcorder is capable of recording in both HDV and DV formats.
You can use only mini DV cassettes in your camcorder.
Use a cassette with the Mini DV mark.

What is the HDV (HDV) format?

The HDV format is a video format developed to record and play back digital high definition (HD) video signals on a DV cassette.
Your camcorder adopts the Interlace mode with 1080 effective scan lines of screen ruling (1080i, number of pixels 1440 × 1080 dots).
The video bit rate for recording is about 25 Mbps.
i.LINK is adopted for the digital interface, enabling a digital connection with an HDV compatible TV or computer.

Playback

- Your camcorder can play back pictures in both the DV format and HDV1080i specification.
- Your camcorder can play back a picture recorded in the 720/30p system of the HDV format but cannot output it from the i HDV/DV jack.

Copyright signal

When you play back

If the cassette you play back on your camcorder contains copyright signals, you cannot copy it to a tape in another video device connected to your camcorder.

When you record

You cannot record software on your camcorder that contains copyright control signals for copyright protection of software.

[Cannot record due to copyright protection.] appears on the LCD screen, or on the TV screen if you try to record such software.
Your camcorder does not record copyright control signals on the tape when it records.

Notes on cassette tapes

To prevent accidental erasure

Slide the write-protect tab on the cassette to set to SAVE.

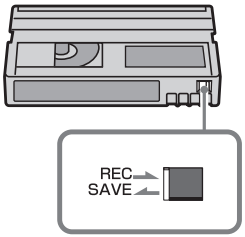

REC: The cassette can be recorded.
SAVE: The cassette cannot be recorded (write-protected).

When labeling the cassette

Be sure to place the label only on the locations as shown in the following illustration so as not to cause malfunction of your camcorder.

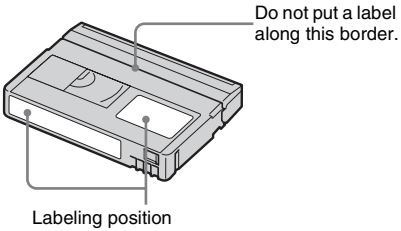

After using the cassette

Rewind the tape to the beginning to avoid distortion of the picture or the sound. The cassette should then be put in its case, and stored in an upright position.

When cleaning the gold-plated connector

Generally, clean the gold-plated connector on a cassette with a cotton-wool swab after every 10 times it has been ejected.
If the gold-plated connector on the cassette is dirty or dusty, the remaining tape indicator may not be indicated correctly.

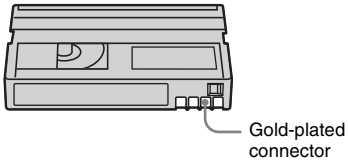

Note

- Your camcorder is not compatible with Cassette Memory.

Mini DV Digital Video Cassette are trademarks.

HDV and HDV are trademarks of Sony Corporation and Victor Company of Japan, Ltd.

All other product names mentioned herein may be the trademarks or registered trademarks of their respective companies.
Furthermore, "™" and "®" are not mentioned in each case in this manual.

About the "InfoLITHIUM" battery pack

This unit is compatible with the "InfoLITHIUM" battery pack (L series). Your camcorder operates only with the "InfoLITHIUM" battery pack.
"InfoLITHIUM" L series battery packs have the InfoLITHIUM L mark.

What is the "InfoLITHIUM" battery pack?

The "InfoLITHIUM" battery pack is a lithium-ion battery pack that has functions for communicating information related to operating conditions between your camcorder and an optional AC Adaptor/charger.
The "InfoLITHIUM" battery pack calculates the power consumption according to the operating conditions of your camcorder, and displays the remaining battery time in minutes. With an AC Adaptor/charger (optional), the remaining battery time and charging time appear.

To charge the battery pack

- Be sure to charge the battery pack before you start using your camcorder.
- We recommend charging the battery pack in an ambient temperature of between 10°C to 30°C (50°F to 86°F) until the CHG (charge) lamp turns off. If you charge the battery pack outside of this temperature range, you may not be able to charge it efficiently.
- After charging is complete, either disconnect the cable from the DC IN jack on your camcorder or remove the battery pack.

To use the battery pack effectively

- Battery pack performance decreases when the surrounding temperature is 10°C (50°F) or below, and the length of time you can use the battery pack becomes shorter. In that case, do one of the following to use the battery pack for a longer time.

➡continued

– Put the battery pack in a pocket to warm it up, and insert it in your camcorder right before you start taking shots.
– Use a large capacity battery pack.

- Frequent use of the LCD screen or a frequent playback, fast forward or rewind operation wears out the battery pack faster. We recommend using a large capacity battery pack: NP-F770/F970 (optional).
- Be sure to set the POWER switch to OFF (CHG) when not recording or playing back on your camcorder. The battery pack is also consumed when your camcorder is in recording standby or playback pause.
- Have spare battery packs ready for 2 or 3 times the expected recording time, and make trial recordings before making the actual recording.
- Do not expose the battery pack to water. The battery pack is not water resistant.

About remaining battery time indicator

- When the power goes off even though the remaining battery time indicator indicates that the battery pack has enough power to operate, charge the battery pack fully again. The indication on the remaining battery time will be indicated correctly. Note, however, that the battery indication will not be restored if it is used in high temperatures for a long time, or if left in a fully charged state, or when the battery pack is frequently used.
  Use the remaining battery time indication as a guide to the approximate shooting time.
- The mark that indicates low battery flashes even if there are still 5 to 10 minutes of battery time remaining, depending on the operating conditions or ambient temperature and environment.

About storage of the battery pack

- If the battery pack is not used for a long time, fully charge the battery pack and use it on your camcorder once a year to maintain the proper function.
  To store the battery pack, remove it from your camcorder and put it in a dry, cool place.
- To discharge the battery pack on your camcorder completely, eject a cassette and leave your camcorder in tape recording standby until the power goes off.

About battery life

- The battery life is limited. Battery capacity drops little by little as you use it more and more, and as time passes. When the available battery time is shortened considerably, a probable cause is that the battery pack has reached the end of its life. Please buy a new battery pack.
- The battery life varies depending on how it is stored and the operating conditions and environment for each battery pack.

"InfoLITHIUM" is a trademark of Sony Corporation.

About i.LINK

The i.LINK Interface on this unit is an i.LINK-compliant Interface. This section describes the i.LINK standard and its features.

What is i.LINK?

i.LINK is a digital serial interface for transferring digital video, digital audio, and other data to other i.LINK-compatible device. You can also control other device using the i.LINK.
i.LINK-compatible device can be connected using an i.LINK cable. Possible applications are operations and data transactions with various digital AV devices.
When 2 or more i.LINK-compatible device are connected to this unit in a daisy chain, operations and data transactions are possible with not only the device that this unit is connected to but also with other devices via the directly connected device.
Note, however, that the method of operation sometimes varies according to the characteristics and specifications of the device to be connected. Also, operations and data transactions may not be possible on some connected device.

Note

- Normally, only one device can be connected to this unit with the i.LINK cable. When connecting this unit to an HDV/DV compatible device having two or more i.LINK Interfaces, refer to the operating instructions of the device to be connected.

Tip

- i.LINK is a more familiar term for the IEEE 1394 data transport bus proposed by Sony, and is a trademark approved by many corporations.
- IEEE 1394 is an international standard standardized by the Institute of Electrical and Electronics Engineers.

About i.LINK Baud rate

i.LINK's maximum baud rate varies according to the device. There are 3 types.

S100 (approx. 100Mbps*)
S200 (approx. 200Mbps)
S400 (approx. 400Mbps)

The baud rate is listed under "Specifications" in the operating instructions of each piece of device. It is also indicated near the i.LINK interface on some device.
The baud rate may differ from the indicated value when the unit is connected to device with a different maximum baud rate.

* What is Mbps?
Mbps stands for "megabits per second," or the amount of data that can be sent or received in 1 second. For example, a baud rate of 100 Mbps means that 100 megabits of data can be sent in 1 second.

To use i.LINK functions on this unit

For details on how to dub when this unit is connected to other video device having a i.LINK Interface, see page 82.
This unit can also be connected to other i.LINK compatible device made by Sony (e.g. a VAIO series personal computer) as well as to video device.
Some i.LINK compatible video device such as Digital Televisions, DVD recorders/players, and MICROMV recorders/players are not compatible with this unit. Before connecting to other device, be sure to confirm whether the device is compatible with HDV/DV or not.
For details on precautions and compatible application software, refer also to the operating instructions for the device to be connected.

About the required i.LINK cable

Use the supplied one or Sony i.LINK 4-pin-to-4-pin cable (during HDV/DV dubbing).

i.LINK and ⁞ are trademarks of Sony Corporation.

Maintenance and precautions

On use and care

- Do not use or store the camcorder and accessories in the following locations.
  - Anywhere extremely hot or cold. Never leave them exposed to temperatures above 60°C (140°F), such as under direct sunlight, near heaters or in a car parked in the sun. They may malfunction or become deformed.
  - Near strong magnetic fields or mechanical vibration. The camcorder may malfunction.
  - Near strong radio waves or radiation. The camcorder may not be able to record properly.
  - Near AM receivers and video equipment. Noise may occur.
  - Sandy beach or anywhere dusty. If sand or dust gets in your camcorder, it may malfunction. Sometimes this malfunction cannot be repaired.
  - Near windows or outdoors, where the LCD screen, the viewfinder, or the lens may be exposed to direct sunlight. This damages the inside of the viewfinder or the LCD screen.
  - Anywhere very humid.
- Operate your camcorder on DC 7.2 V (battery pack) or DC 8.4 V (AC Adaptor/charger).
- For DC or AC operation, use the accessories recommended in these operating instructions.
- Do not let your camcorder get wet, for example, from rain or sea water. If your camcorder gets wet, it may malfunction. Sometimes this malfunction cannot be repaired.
- If any solid object or liquid gets inside the casing, unplug your camcorder and have it checked by a Sony dealer before operating it any further.
- Avoid rough handling, disassembling, modifying, or mechanical shock. Be particularly careful of the lens.
- Keep the POWER switch set to OFF (CHG) when you are not using your camcorder.
- Do not wrap your camcorder with a towel, for example, and operate it. Doing so might cause heat to build up inside.
- When disconnecting the power cord, pull by the plug and not the cord.
- Do not damage the power cord such as by placing anything heavy on it.
- Keep metal contacts clean.
- Keep the Remote Commander and button-type battery out of children's reach. If the battery is accidentally swallowed, consult a doctor immediately.
- If the battery electrolytic liquid has leaked,
  - consult your local authorized Sony service facility.
  - wash off any liquid that may have contacted your skin.
  - if any liquid gets in your eyes, wash with plenty of water and consult a doctor.

When not using your camcorder for a long time

Occasionally turn it on and let it run such as by playing back tapes for about 3 minutes.

Moisture condensation

If your camcorder is brought directly from a cold place to a warm place, moisture may condense inside your camcorder, on the surface of the tape, or on the lens. In this state, the tape may stick to the head drum and be damaged or your camcorder may not operate correctly. If there is moisture inside your camcorder, [Moisture condensation. Eject the cassette] or [Moisture condensation. Turn off for 1H.] appears. The indicator will not appear when the moisture condenses on the lens.

If moisture condensation has occurred

None of the functions except cassette ejection will work. Eject the cassette, turn off your camcorder, and leave it for about 1 hour with the cassette lid open. Your camcorder can be used again if or ⏏ does not appear when the power is turned on again.
If moisture starts to condense, your camcorder sometimes cannot detect condensation. If this happens, the cassette is sometimes not ejected for 10 seconds after the cassette lid is opened.

This is not a malfunction. Do not close the cassette lid until the cassette is ejected.

Note on moisture condensation

Moisture may condense when you bring your camcorder from a cold place into a warm place (or vice versa) or when you use your camcorder in a humid place as shown below.

- When you bring your camcorder from a ski slope into a place warmed up by a heating device.
- When you bring your camcorder from an air-conditioned car or room into a hot place outside.
- When you use your camcorder after a squall or a shower.
- When you use your camcorder in a hot and humid place.

How to prevent moisture condensation

When you bring your camcorder from a cold place into a warm place, put your camcorder in a plastic bag and seal it tightly. Remove the bag when the air temperature inside the plastic bag has reached the surrounding temperature (after about 1 hour).

Video head

- When the video head becomes dirty, you cannot record pictures normally, or distorted picture or sound is played back.
- If the following problem occurs, clean the video heads for 10 seconds with the cleaning cassette.
  - Mosaic-pattern noise appears on the playback picture or the screen is displayed in blue.

  - Playback pictures do not move.
  - A part of playback pictures does not move.
  - Playback pictures do not appear or the sound breaks off.
  - [⊗ Dirty video head. Use a cleaning cassette.] appears on the screen during recording.
- The video head suffers from wear after long use. If you cannot obtain a clear image even after using a cleaning cassette, it might be because the video head is worn. Please contact your Sony dealer or local authorized Sony service facility to have the video head replaced.

LCD screen

- Do not add excessive pressure on the LCD screen, as it may cause damage.
- If your camcorder is used in a cold place, a residual image may appear on the LCD screen. This is not a malfunction.
- While using your camcorder, the back of the LCD screen may heat up. This is not a malfunction.

To clean the LCD screen

- If fingerprints or dust make the LCD screen dirty, it is recommended to use an LCD cleaning cloth (supplied) to clean it. When you use the LCD Cleaning Kit (optional), do not apply the cleaning liquid directly to the LCD screen. Use cleaning paper moistened with the liquid.

Cleaning the casing

- If the casing is soiled, clean the camcorder body with a soft cloth lightly moistened with water, and then wipe the casing with a dry soft cloth.
- Avoid the following to prevent the finish from being damaged.
  - Using chemicals such as thinner, benzine, alcohol, chemical cloths, repellent and insecticide.
  - Handling with above substances on your hands.
  - Leaving the case in contact with rubber or vinyl objects for a long period of time.

About care and storage of the lens

- Wipe the surface of the lens clean with a soft cloth in the following instances:
  - When there are fingerprints on the lens surface.
  - In hot or humid locations
  - When the lens is exposed to salty air such as at the seaside.
- Store in a well-ventilated location subject to little dirt or dust.

➡*continued*

- To prevent molds periodically clean the lens as described above.

It is recommended you operate your camcorder about once a month to keep it in an optimum state for a long time.

To charge the pre-installed button-type battery

Your camcorder has a pre-installed button-type battery to retain the date, time, and other settings even when the POWER switch is set to OFF (CHG). The pre-installed button-type battery is always charged while you are using your camcorder but it will get discharged gradually if you do not use your camcorder. The button-type battery will be fully discharged in about 3 months if you do not use your camcorder at all. However, even if the pre-installed button-type battery is not charged, the camcorder operation will not be affected if you are not recording the date.

Procedures

Connect your camcorder to a wall outlet using the supplied AC Adaptor/charger, and leave it with the POWER switch set to OFF (CHG) for more than 24 hours.

Removing dust from inside the viewfinder

1 Remove the viewfinder.

While sliding the viewfinder release lever down ❶, slide and remove the viewfinder ❷.

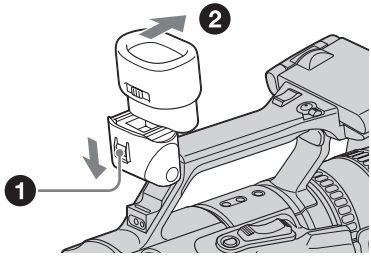

2 Remove dust from inside the viewfinder and the part shown below with a blower.

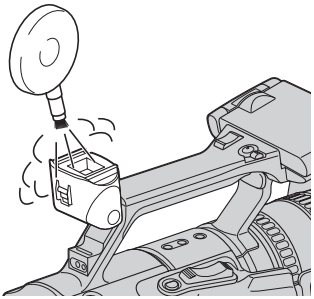

Specification

System

Video recording system (HDV)
2 rotary heads, Helical scanning system
Video recording system (DV)
2 rotary heads, Helical scanning system
Audio recording system (HDV)
Rotary heads, MPEG-1 Audio Layer2
Quantization: 16 bits (Fs 48 kHz, stereo)
Transfer rate: 384 kbps
Audio recording system (DV)
Rotary heads, PCM system
Quantization: 12 bits (Fs 32 kHz, stereo 1, stereo 2), 16 bits (Fs 48 kHz, stereo)
Video signal
NTSC color, EIA standards, 1080/60i specification
Usable cassette
Mini DV cassette with the Mini DV mark printed
Tape speed (HDV)
Approx. 18.81 mm/s
Tape speed (DV)
SP: Approx. 18.81 mm/s
LP: Approx. 12.56 mm/s
Recording/playback time (HDV)
60 min (using a DVM60 cassette)
Recording/playback time (DV)
SP: 60 min (using a DVM60 cassette)
LP: 90 min (using a DVM60 cassette)
Fast forward/rewind time
Approx. 2 min 40 s (using a DVM60 cassette)
Viewfinder
Electric viewfinder (color)
Image device
6 mm (1/3 type) 3CCD (Charge Coupled Device)
Gross: Approx. 1 120 000 pixels
Effective: Approx. 1 070 000 pixels
Lens
Carl Zeiss Vario-Sonnar SQ T*
Combined power zoom lens
Filter diameter: 72 mm (2 7/8 in.)
12 × (Optical)
F = 1.6 ~ 2.8
Focal length
4.5 - 54 mm (3/16 - 2 1/4 in.)
When converted to a 35 mm still camera
32.5 - 390 mm (1 5/16 - 15 3/8 in.)
(40 - 480 mm (1 5/8 - 19 in.) in 4:3 TV mode)
Color temperature
[AUTO], [ONE-PUSH A/B], [INDOOR] (3 200 K), [OUTDOOR] (5 800 K)
Minimum illumination
3 lx (lux) (F 1.6)

Input/Output connectors

Audio/Video input/output
Video signal: 1 Vp-p, 75 Ω (ohms), unbalanced, sync negative
Audio signal: 327 mV (at load impedance 47 kΩ (kilohms)), Input impedance more than 47 kΩ (kilohms), Output impedance less than 2.2 kΩ (kilohms)
S VIDEO input/output
Luminance signal: 1 Vp-p, 75 Ω (ohms), unbalanced
Chrominance signal: 0.286 Vp-p, 75 Ω (ohms), unbalanced
COMPONENT OUTPUT jack
Y: 1 Vp-p (0.3 V sync negative)
PB/PR, CB/CR: +/- 350 mVp-p, Input impedance 75 Ω (ohms)
Headphones jack
Stereo minijack (Ø 3.5 mm)
LANC jack
Stereo mini-minijack (Ø 2.5 mm)
MIC jack
Minijack, 0.388 mV low impedance with DC 2.5 to 3.0 V, output impedance 6.8 kΩ (kilohms) (Ø 3.5 mm), Stereo type
HDV/DV jack
i.LINK Interface (IEEE1394, 4-pin connector S400)

LCD screen

Picture
8.8 cm (3.5 type)
Total dot number
250 000 (1 120 × 224)

➡continued

General

Power requirements
DC 7.2 V (battery pack)
DC 8.4 V (AC Adaptor/charger)

Average power consumption (when using the battery pack)
During camera recording using the viewfinder with normal brightness:
HDV recording 7.4 W
DV recording 6.9 W
During camera recording using the LCD with normal brightness:
HDV recording 8.0 W
DV recording 7.5 W

Operating temperature
0° C to 40° C (32° F to 104° F)

Storage temperature
-20° C to + 60° C (-4° F to + 140° F)

Dimensions (approx.)
166 × 194 × 362 mm (6 5/8 × 7 3/4 × 14 3/8 in.) (w/h/d)

Mass (Approx.)
2.1 kg (4 lb 10 oz) main unit only
2.4 kg (5 lb 4.6 oz) including the NP-F970 rechargeable battery pack, DVM60 cassette and lens hood.

Supplied accessories
See page 14.

AC Adaptor/charger AC-VQ850

Power requirements
AC 100 - 240 V, 50/60 Hz
12/24 V (only for negative grounded cars)

Power consumption
25 W
Charging mode:
35 VA (AC 100V), 50 VA (AC 240 V)
Operating mode:
40 VA (AC 100 V), 50 VA (AC 240 V)

Output voltage
DC OUT:
8.4 V, 2.0 A in operating mode
Battery charge terminal”
8.4 V, 1.4 A in charge mode

Operating temperature
0° C to 40° C (32° F to 104° F)

Storage temperature
-20° C to + 60° C (-4° F to + 140° F)

Dimensions (approx.)
136 × 48 × 90 mm (5 1/8 × 1 10/16 × 3 1/2 in.) (w/h/d) excluding the projecting parts

Mass (approx.)
280 g (9.9 oz)

Rechargeable battery pack (NP-F970)

Maximum output voltage
DC 8.4 V

Output voltage
DC 7.2 V

Capacity
47.5 Wh (6 600 mAh)

Dimensions (approx.)
38.4 × 60.0 × 70.8 mm
(1 9/16 × 2 3/8 × 2 7/8 in.) (w/h/d)

Mass (approx.)
300 g (10.6 oz)

Operating temperature
0° C to 40° C (32° F to 104° F)

Type
Lithium ion

Shoulder brace

Dimensions (approx.)
250 × 125 × 90 mm
(9 7/8 × 5 × 3 5/8 in.) (w/h/d)

Mass (approx.)
400 g (14.2 oz)

External microphone ECM-672

General

Type
Back-element condenser microphone

Power supply
IEC R6P battery (size AA) × 1
External power supply DC 48 V

Standard operating voltage
Internal battery: DC 1.5 V

Minimum operating voltage
Internal battery: aprrox. DC 1.1 V

Battery life
Approx. 3 000 hours (with Sony SUM-3(NS))

Current drain
Internal battery: less than 0.3 mA
External power supply: less than 0.5 mA

Output connector
Cannon XLR-3-12C type

Dimensions (approx.)
24 dia. × 304 mm (31/32 dia. × 12 in.)

Mass (approx.)
250 g (8.8 oz)

Performance

Frequency response
50 - 16 000 Hz

Directivity
Uni-directional

Output impedance
250 Ω (ohms)±20%, balanced
Sensitivity (deviation±2 dB)
Open circuit voltage: -42.0 dB
(7.94 mV, 0 dB = 1 V/1 Pa at 1 kHz)
Recommended load impedance: more than 3 kΩ (kilohms)
Signal-to-noise ratio
More than 72 dB (at 1 kHz, 1 Pa)
Inherent noise
Less than 22 dB SPL (0 dB = 20μPa)
Wind noise*
Less than 55 dB SPL (without wind screen)
Less than 45 dB SPL)(with wind screen)
Induction noise from external magnetic field**
Less than 0 dB SPL/mG
Low-cut filter
Cut-off frequency: 75 Hz (M), 180 Hz (V)
Maximum input sound pressure level
114 dB SPL (10.0 Pa)
(input level for 1% waveform distortion at 1 kHz, converted into equivalent input sound pressure level; 0 dB = 20μPa)
Dynamic range
More than 92 dB
Ambient temperature range
For operation: 0° C to + 60° C (+32° F to + 140° F)
For storage: -20° C to + 60° C (+32° F to + 140° F)

* Wind noise is the value measured by applying a wind velocity of 2 m/s (6.6 ft/s) from all directions to the microphone. the mean value is taken and converted to the equivalent sound pressure level (0 dB = 20μPa).
**External magnetic field induction noise is measure with the microphone placed in an alternating magnetic field of 50 Hz, 1 mG. The maximum noise value is taken and then converted to the equivalent sound pressure level (0 dB = 20μPa).

Design and specifications are subject to change without notice.

Identifying parts and controls

Camcorder

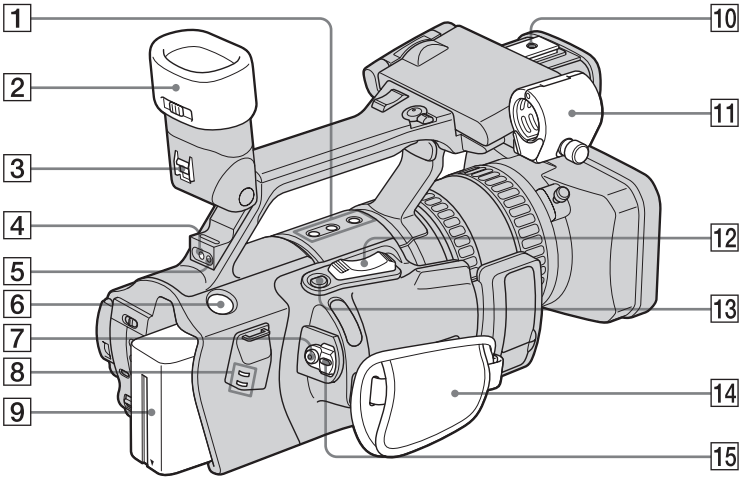

1 **SHOT TRANSITION operation buttons (p. 46)**

2 **Eyecup (p. 21)**

3 **Viewfinder release lever (p. 110)**

4 **Rear remote sensor**

5 **Rear camera recording lamp (p. 29)**

6 **BATT RELEASE (battery release) button (p. 16)**

7 **REC START/STOP button (p. 29)**

8 **i.LINK lamps (HDV/DV) (p. 85)**
Lights up when handling an i.LINK signal.

9 **Battery pack (p. 15)**

10 **Shoe adaptor attaching part (p. 28)**

11 **External microhone holder (p. 26)**

12 **Power zoom lever (p. 31)**

13 **EXPANDED FOCUS button (p. 41)**

14 **Grip belt (p. 12)**

15 **POWER switch (p. 20)**

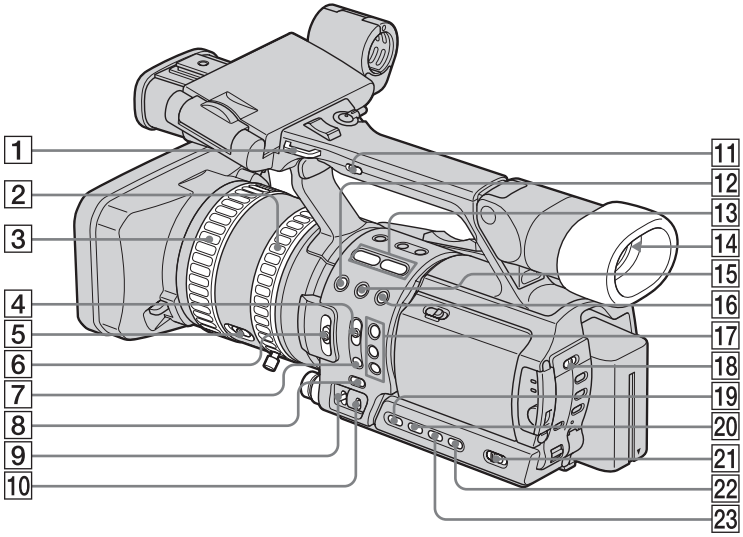

1 **Hook for the shoulder strap**

2 **Zoom ring (p. 32)**

3 **Focus ring (p. 41)**

4 **FOCUS switch (AUTO/MAN (manual)/ INFINITY) (p. 41)**

5 **ZOOM switch (p. 31)**

6 **ND FILTER switch (1/2/OFF) (p. 39)**

7 **PUSH AUTO button (p. 42)**

8 **WHT BAL (One-push white balance) button (p. 35)**

9 **GAIN switch (H/M/L) (p. 37)**

10 **WHT BAL (white balance) switch (A/B/ PRESET) (p. 35)**

11 **Handle zoom switch (H/L/OFF) (p. 32)**

12 **REC REVIEW button (p. 50)**

13 **Format lamps (p. 29)**

14 **Viewfinder (p. 12, 21)**

15 **BACK LIGHT button* (p. 34)**

16 **SPOT LIGHT button (p. 34)**

17 **ASSIGN buttons (1/2/3)* (p. 80)**

18 **ZEBRA/PEAKING switch (p. 40, 42)**

19 **IRIS button (p. 37)**

20 **GAIN button* (p. 37)**

21 **AUTO LOCK switch (p. 35, 37, 38)**

22 **WHT BAL (white balance) button (p. 35)**

23 **SHUTTER SPEED button (p. 38)**

* Each of the buttons has a raised tactile dot. (The ASSIGN button has it on the 2 button.) Use it to identify the location of the buttons.

➡*continued*

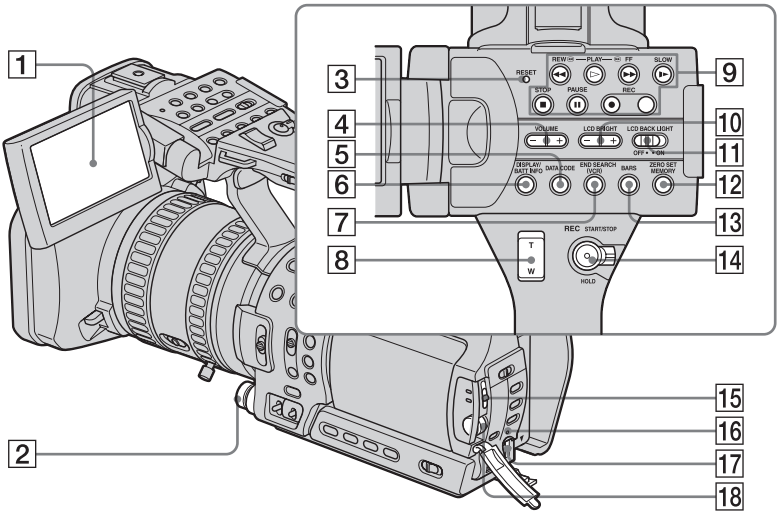

1 **LCD screen (p. 12, 20)**

2 **IRIS dial (p. 37)**

3 **RESET button**
If you press RESET, all settings including the clock setting (except the Personal Menu and Picture Profile settings) return to the default.

4 **VOLUME –/+ buttons* (p. 51)**

5 **DATA CODE button (p. 53)**

6 **DISPLAY/BATT INFO button (p. 17)**

7 **END SEARCH (VCR) button (p. 53)**

8 **Handle zoom lever (p. 32)**

9 **Video control buttons (Rewind, Playback*, Fast-forward, Pause, Stop, Slow, Record) (p. 51)**

10 **LCD BRIGHT –/+ buttons (p. 20)**

11 **LCD BACK LIGHT switch (p. 20)**

12 **ZERO SET MEMORY button (p. 58)**

13 **BARS button (p. 30)**

14 **REC START/STOP button and HOLD lever (p. 30)**

15 **AUTO/MAN (manual) audio switch (p. 46)**

16 **CHG (charge) lamp (p. 15)**

17 **DC IN jack (p. 15)**

18 **AUDIO LEVEL dial (p. 46)**

* Each of the buttons has a raised tactile dot. (The VOLUME button has it on the + side.) Use it to identify the location of the buttons.

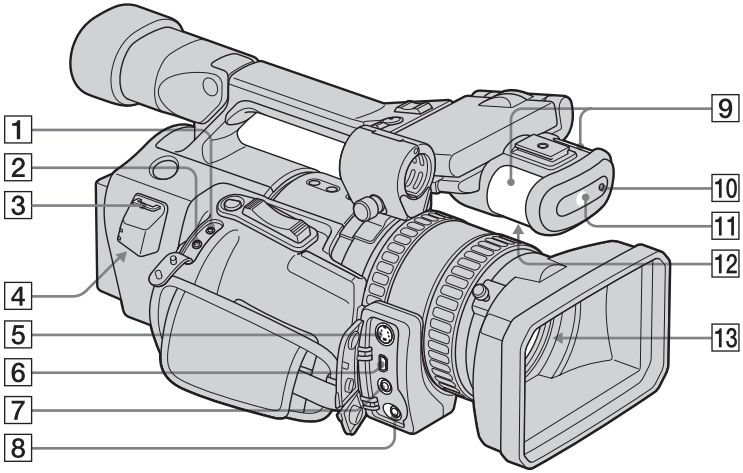

1 **LANC jack (blue)**
The LANC control jack is used for controlling the tape transport of video device and peripherals connected to it.

2 **(headphones) jack**
When you use headphones, the speaker on your camcorder is silent.

3 **Hook for the shoulder strap (p. 28)**

4 **HDV/DV jack (p. 55, 82, 83, 86, 87, 89)**

5 **S VIDEO jack (p. 55, 57, 84, 87)**

6 **COMPONENT OUTPUT jack (p. 55, 57)**

7 **AUDIO/VIDEO jack (p. 55, 57, 84, 87, 90)**

8 **MIC (PLUG IN POWER)/LINE jack (red) (p. 90)**

9 **Microphone (p. 90)**

10 **Front camera recording lamp (p. 29)**

11 **Front remote sensor**

12 **Speaker**

13 **Lens (Carl Zeiss Lens)**
Your camcorder is equipped with a Carl Zeiss lens which can reproduce fine images. The lens for your camcorder was developed jointly by Carl Zeiss, in Germany, and Sony Corporation. It adopts the MTF measurement system for video cameras and offers a quality level as fine as that of a Carl Zeiss lens.
Moreover, your camcorder employs the Carl Zeiss Vario-Sonnar SQ T* lens designed exclusively for QUALIA. In addition to improved lens processing accuracy achieved through high-precision polishing, a T*-coating was deposited on the lens surface by a special process where the advantages of the coating film design are optimized.

MTF stands for Modulation Transfer Function.The value number indicates the amount of light from a subject coming into the lens.

➡*continued*

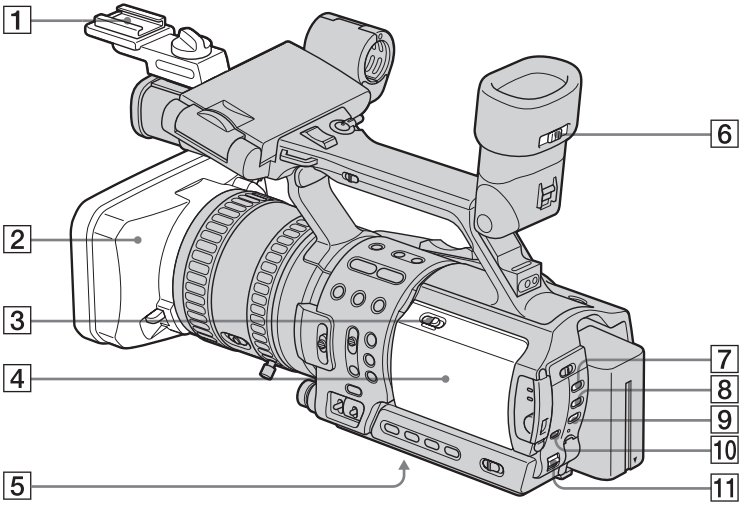

1 **Shoe adaptor**
To connect an accessory, press down and push it to the end, and then tighten the screw. To remove an accessory, loosen the screw, and then press down and pull out the accessory.
When you attach the shoe adaptor, be careful not to damage the LCD panel.

2 **Lens hood (p. 29)**

3 **OPEN/EJECT lever (p. 23)**

4 **Cassette compartment lid (p. 23)**

5 **Tripod receptacle**
Make sure that the length of the tripod screw is less than 5.5 mm (7/32 inch). Otherwise, you cannot attach the tripod securely, and the screw may damage your camcorder.

6 **Viewfinder lens adjustment lever (p. 21)**

7 **PICTURE PROFILE button (p. 43)**

8 **MENU button (p. 60)**

9 **P-MENU button (p. 77)**

10 **STATUS CHECK button (p. 33, 54)**

11 **SEL/PUSH EXEC dial (p. 60)**

Remote Commander

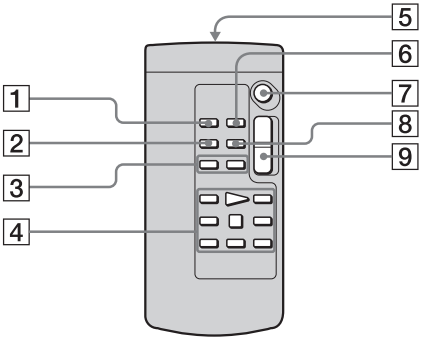

1 **DISPLAY button (p. 53)**

2 **SEARCH MODE button (p. 59)**

3 **⏮/⏭ buttons (p. 59)**

4 **Video control buttons (Rewind, Playback, Fast-forward, Pause, Stop, Frame, Slow, ×2) (p. 51)**

5 **Transmitter**
After turning on your camcorder, point towards the remote sensor to control your camcorder.

6 **ZERO SET MEMORY button (p. 58)**

7 **REC START/STOP button (p. 29)**

8 **DATA CODE button (p. 53)**

9 **Power zoom button (p. 31)**

To insert the batteries

1 Press and pull out the cover of the battery compartment.

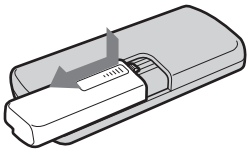

2 Insert 2 size AA (R6) batteries by matching the + and – on the batteries to the + and – in the battery compartment.

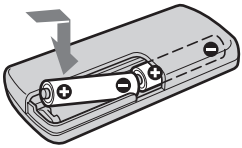

3 Replace the cover back until it clicks.

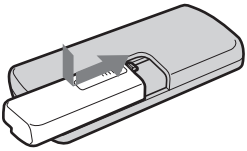

Notes on the Remote Commander

- Point the remote sensor away from strong light sources such as direct sunlight or overhead lighting. Otherwise, the Remote Commander may not function properly.
- The Remote Commander may not function properly when the remote sensor is obstructed with a conversion lens (optional).
- When you are operating with the Remote Commander supplied with your camcorder, your VCR may also operate. In that case, select a commander mode other than VTR 2 for your VCR, or cover the sensor of your VCR with black paper.

Shoulder brace

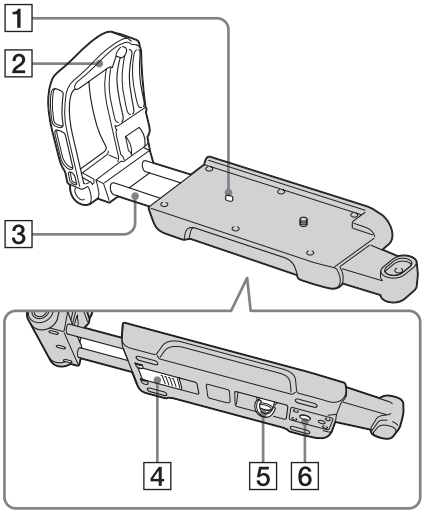

1 **Video boss**

2 **Should pad**

3 **Adjuster**

4 **Lock lever**

5 **Camera attaching screw**

6 **Tripod receptacle**
Make sure that the length of the tripod screw is less than 5.5 mm (7/32 inch). Otherwise, you cannot attach the tripod securely, and the screw may damage this unit.

AC Adaptor/charger

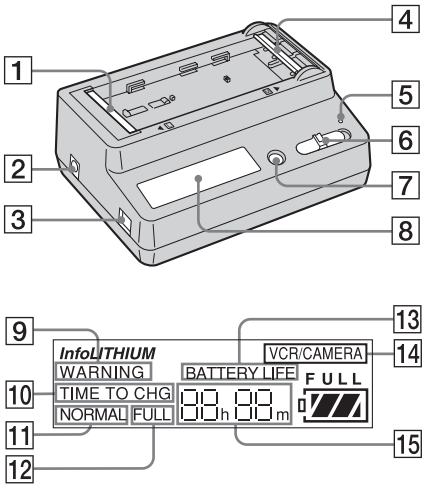

1 **Terminal shutter**
For the supplied "InfoLITHIUM" L series

2 **DC IN jack**
Only for DCC VQ1 car battery cord (optional)

3 **DC output jack**

4 **Terminal shutter**
For "InfoLITHIUM" M series

5 **CHARGE lamp**

6 **Mode switch**

7 **DISPLAY CHANGE button**

8 **Display window**

9 **Warning**

10 **Remaining charging time**

11 **Normal charging**

12 **Full charging**

13 **Remaining battery life**

14 **VCR/CAMERA mode**

15 **Respective time**

Indicators for the LCD screen and viewfinder

Following indicators will appear on the LCD screen and viewfinder to indicate the state of your camcorder.

Example: Indicators in the CAMERA mode

Time code (p. 53)/Tape counter (p. 53)/
Self-diagnosis (p. 101)

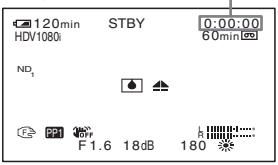

Indicators	Meanings
120min	Remaining battery (p. 30)
HDV1080i, DV	Recording format (p. 29)
SP, LP	Recording mode (p. 31)
STBY/REC	Recording standby/ recording mode
ND_1, ND_2, ND_{OFF}	ND filter (p. 39)
4:3	4:3 standard mode (p. 50)
♪16b	Audio mode (p. 67)*
60min	Remaining tape (p. 30)
	Frame recording (p. 65)*
A/V▸DV	Output analog images and sound in digital format (p. 73)*
HDV/DVIN	HDV input/DV input (p. 88)
→0←	Zero set memory (p. 58)
	Warning (p. 101)
	Manual focus (p. 41)
	Backlight (p. 34)
	Spot light (p. 34)
	Preset white balance (p. 35)
A, B	One-push white balance (p. 35)
CLOSE	Iris closed (p. 37)

Indicators	Meanings
	SteadyShot off (p. 63, 80)
	LCD backlight off (p. 21)
PP1 through PP6	Picture Profile (p. 43)
	Index recording (p. 49)
♪4ch-12b	4-channel microphone recording standard (p. 100)*

* Appears only for the pictures in the DV format.

Index

A

A/V connecting cable 56, 57, 84, 87, 90, 93
AC Adaptor/charger 18
AE RESPONSE 62
AE SHIFT 44
AF ASSIST 64
AGC LIMIT 44
Aperture..... 37
ASSIGN BTN 80
AT IRIS LMT 44
Audio dubbing (AUDIO MIX)..... 66, 91
AUDIO MODE 67
AWB SENS..... 44

B

BACK LIGHT (camera).... 34
Battery
- Battery Info..... 17
- Battery pack..... 15
- Remaining battery time 30, 106
- Remote Commander . 119

BEEP 74
BLACK FADER 48
Button-type battery..... 110

C

Camera settings data display..... 53
Cassette 23
Center marker (CENTER MARKR) 65
Charging the battery
- Battery pack..... 15
- Pre-installed button-type battery 110

CINEFRAME..... 44
CINEMATONE γ 44
Cleaning cassette..... 109
Clock set (CLOCK SET) .. 22
Color bar..... 30
COLOR LEVEL..... 43
COLOR PHASE..... 43
COMPONENT 72
Component video cable 55, 57
Computer connection.....89
Connecting cord (DK-215).....18
Customizing Personal Menu 77

D

Data code (DATA CODE) 53, 75
Date search.....59
Date/time.....22, 53
Display
- DISP OUTPUT 76
- Display indicators 121

Dual sound track tape 66
Dubbing 82
DV WIDE REC 71

E

END SEARCH 53
Expanded focus.....41
Exposure 34
EXT MIC SENC.....67

F

FADER 48
Flickering (FLCKR REDUCE) 64
Focus.....41
FORMAT LAMP.....75
Frame playback.....52
Frame recording (FRAME REC).....65
Full charge 15

G

Gain.....37
GAIN SETUP 62
Grip belt 12

H

HANDLE ZOOM 64
Handle zoom speed.....32
HDV.....12, 103, 104
Headphones jack.....117

I

i.LINK 107
i.LINK cable 55, 82, 83, 86, 87, 89, 93
i.LINK CONV 72
Index search..... 59
Index signal 49
"InfoLITHIUM" battery pack..... 105
INT MIC SENS 67
Iris..... 37
IRIS DIAL..... 75

L

LANC 117
Language (LANGUAGE) . 24
Large eyecup 21
LCD back light (LCD BL LEVEL) 68
LCD brightness (LCD BRIGHT) 20
LCD COLOR 68
LCD screen..... 12
Lens hood 28
Low-angle recording 30
LP (Long Play)
- See Recording mode (REC MODE)

M

Main sound
- See MULTI-SOUND

Manual focus 41
Menu
- AUDIO SET 66
- CAMERA SET 62
- IN/OUT REC 69
- LCD/VF SET 68
- OTHERS..... 74
- Selecting items..... 60

Menu letter size (LETTER SIZE) 75
MIC/LINE IN 67
Microphone 26
Microphone volume level 46
Mirror mode 32
Moisture condensation 108
MPEG2..... 12
MULTI-SOUND 66

N

ND FILTER 39
NTSC 103

O

Operation confirmation beep
See BEEP

P

PAL 103
PEAKING 42
Personal Menu
(P-MENU) 77
PICTURE PROFILE.....43
Picture search 52
Playback
Double speed 52
Frame.....52
Reverse 52
Slow.....52
Playing time 18

R

Rec review 50
Recording capacity
Display 30
REMAINING 76
Recording format (REC
FORMAT) 70
Recording lamp
(REC LAMP) 75
Recording mode (REC
MODE).....70
Recording time.....17
Remote Commander 119
REMOTE CTRL 76
Remote sensor.....114, 117
RESET 116

S

S video 56, 57, 84, 87, 93
Self-diagnosis display 101
SHARPNESS 43
Shot transition 46
SHOT TRANS 62
Shoulder brace 25
Shutter speed.....38
Signal conversion function
(A/V → DV OUT) .73, 94
SKINTONE DTL 44
Skip scan..... 52
Smooth transition
See END SEARCH
SP (Standard Play)
See Recording mode
(REC MODE)
SPOT LIGHT 34
START TIMER 63
STATUS CHECK 33, 54
SteadyShot
(STEADYSHOT) 63
SteadyShot type
(STDYSHOT TYP) 64
Stereo 66
Sub sound
See MULTI-SOUND

T

Tape counter 30, 58
Telephoto
See Zoom
Time code 30
Transition curve (TRANS
CURVE) 63
Transition time (TRANS
TIME) 63
Transition timer 63
TV color systems..... 103
TV TYPE..... 72

U

Using abroad..... 103

V

VCR HDV/DV 69
Video head..... 109
Viewfinder
Adjusting..... 21
Brightness
(VF B.LIGHT) 68
Maintenance..... 110
Volume 51

W

Warning indicators 101
Warning messages 101
WB PRESET 35
WB SHIFT 44
White balance 35
WHITE FADER..... 48
Wide angle
See Zoom
Wind noise (WIND)..... 67
WORLD TIME 74
Write-protect tab 104

Z

Zebra pattern 40
ZEBRA LEVEL 40
Zero set memory 58
Zoom 31
Zoom ring..... 32

SONY®

2005©Sony Corporation Printed in Japan
"SONY" is a registered trademark of Sony Corporation.
"QUALIA" and "QUALIA" logotype are trademarks of Sony Corporation.

2-594-137-11(1)